BENSALEM TOWNSHIP

Building and Planning Department

2400 Byberry Road
Bensalem, PA 19020
Office 215-633-3644 • Fax 215-633-3753

Residential Emergency Sewer Repairs

Excavation from the trap towards house only

- **$10.00** application fee payable to **Bensalem Township** ***Separate check***
- **$119.50** permit fee payable to **Code Inspections Inc** ***Separate check***
- Complete Residential Permit **Application**
- Include **site plan** showing limits and location of underground/excavation work and trap

Excavation that includes any work from the trap to the street

- **$100.00** fee payable to **Bensalem Township** – *($10.00 application fee $90.00 street opening fee)* ***Separate check***
- **$500.00** fee payable to **Bensalem Township** Street Opening Escrow ***Separate check*** from $100.00 fee*. This fee is refundable less 10% administration fee once work is complete and satisfactory. W-9 and letter requesting refund from applicant required to initiate refund.
- **$119.50** permit fee payable to **Code Inspections Inc** ***Separate check***
- Complete Residential Permit **Application**
- Complete **Street Opening Application**
- Include **site plan** showing limits and location of underground/excavation work and trap

As applicant I acknowledge this work is an emergency; submission and payment of these applications is not the issuance of construction permit. Permits will be issued once reviewed and approved. Payment with submission will allow for inspections to take place while permits are under review. Any work done prior to issuance of permits must meet current code standards. Additional permits may be required. Underground work in the right of way requires a street opening permit application to be filed with Bensalem Township and I will be responsible to file and obtain these permits.

_____

Signature of applicant required Print name of applicant (must be legible) date

_____

Site address

Code Inspections, Inc.

Bensalem Permit #

CONSTRUCTION PERMIT APPLICATION

605 Horsham Rd ● Horsham PA 19044 ● Office 215-672-9400 ● Fax 215-672-9736

Note: Read page four (4) in its entirety prior to completing this application

ALL APPLICATIONS ARE TO BE SUBMITTED TO THE BENSALEM TOWNSHIP BUILDING & PLANNING DEPT AT 2400 BYBERRY RD OR EMAILED TO permitcenter@bensalempa.gov

ALL PLANS PREPARED BY A DESIGN PROFESSIONAL **MUST BE SUBMITTED ELECTRONICALLY** VIA DISC OR EMAIL – NO PAPER PLANS ACCEPTED

County: **BUCKS** Municipality: **BENSALEM**

Application Date: _____ Approval Date: _____ **PERMIT NUMBER:** _____

LOCATION OF PROPOSED WORK OR IMPROVEMENT

Site Address: _____ Tax Parcel # _____

Lot # _____ Subdivision/Land Development: _____ Phase: _____ Section: _____

TYPE OF WORK OR IMPROVEMENT *(Check One)*

☐ New Building ☐ Addition ☐ Alteration ☐ Repair ☐ Demolition ☐ Relocation

☐ Foundation Only ☐ Change of Use ☐ Plumbing ☐ Mechanical ☐ Electrical ☐ Other

Describe the proposed work: _____

OWNER: _____ Phone # _____ Fax # _____

Mailing Address: _____ Email: _____

CONTRACTOR INFORMATION

	License #	Name	Address	Phone#
Applicant				
Carpentry				
Concrete				
Design Professional				
Drywall or Lathing				
Electrical				
Excavation				
Fire Alarm				
Masonry				
Mechanical				
Paving				
Plumbing				
Principal Contractor				
Roofing				
Sewer				
Sprinkler				

TOTAL ESTIMATED COST OF CONSTRUCTION *(reasonable fair market value)* **$** _____

DESCRIPTION OF BUILDING USE *(Check One)*

RESIDENTIAL

☐ One Family Dwelling (R-3) ☐ Two Family Dwelling (R-3)

NON-RESIDENTIAL

Specific Use: _____ Change in Use: ☐ YES ☐ NO

Use Group: _____ **If YES**, Indicate Former: _____

Maximum Occupancy Load: _____ Maximum Live Load: _____

BUILDING SECTION: ESTIMATED COST OF BUILDING WORK (Contract Value) $_____

Number of Residential Units: _____ Existing _____ Proposed

Type of Structural Frame: ☐ Wood ☐ Masonry ☐ Concrete ☐ Pre-Manufactured Dwelling

☐ Steel ☐ Other, Explain: _____

Does or will your building contain any of the following:

Elevators/Excalators/Lifts/Moving Walks: ☐ YES ☐ NO Pressure Vessels: ☐ YES ☐ NO

Sprinkler System: ☐ YES ☐ NO Refrigeration Systems: ☐ YES ☐ NO

Fireplace(s): Number _____ Type of Fuel _____ Type of Vent _____

Bedrooms (number)		Stories (number)		Street Frontage (feet)	
Full Baths (number)		Building Area (sq/ft)		Front Setback (feet)	
Partial Baths (number)		Living Area (sq/ft)		Rear Setback (feet)	
Garages (number)		Basement Area (sq/ft)		Left Setback (feet)	
Garage Area (sq/ft)		Office/Sales (sq/ft)		Right Setback (feet)	
Outside Parking (number)		Service (sq/ft)		Height Above Grade (feet)	

PLUMBING SECTION: ESTIMATED COST OF PLUMBING WORK (Contract Value) $_____

NEW PLUMBING WORK REQUIRES AUTHORIZATION FROM BUCKS COUNTY WATER & SEWER AUTHORITY

Enter the number and size of Fixtures being Repaired, Replaced or Installed

Tubs / Showers			Laundry Tubs		Sewage Ejectors	
Shower stalls			Dishwashers		Back Flow Preventers	
Lavatories			Garbage Disposals		Water Pumps	
Toilets			Water Heaters		Water Service	
Urinals			Water Softeners		Sewer Connection	
Sinks			Other			

Water Service: (Check) ☐ Public ☐ Private

Sewer Service: (Check) ☐ Public ☐ Private - Septic Permit # _____

IS PLUMBING WORK NEW? ☐ YES ☐ NO

MECHANICAL SECTION: ESTIMATED COST OF MECHANICAL WORK (Contract Value) $_____

Enter the number and size of Units being Replaced or Installed

Forced Air Furnace		Space Heater		A/C Compressor	
Solid fuel Aj) liance		Unit Heater		Split AJC Unit	
Heat Pump		Boiler		Coil Unit	
Air Handling Unit		Gravity Furnace		Gas/Oil Conversion	
Electric Furnace		Incinerator		Air Cleaner	
Other:					

Fuel Type: ☐ Gas ☐ Oil ☐ L.P. ☐ Electric ☐ Coal ☐ Wood ☐ Other

ELECTRICAL SECTION: ESTIMATED COST OF ELECTRICAL WORK (Contract Value) $_____

Enter the number and size of Fixtures being Repaired, Replaced or Installed

Service Amps # of Circuits _____ # of Service Outlets _____ 110V _____ 220V _____ Utility #

List devices	Qty	Load/Output	List devices	Qty	Load/Output	List devices	Qty	Load/Output
Switches			Dishwasher			Heater		
Receptacles			Washer			Hot Water Heater		
Circuit Panel			Dryer					
Lights			Spa / Hot Tub					
Smoke Det.			A / C Unit					

FIRE PROTECTION SECTION: ESTIMATED COST OF FIRE PROTECTION WORK (Contract value) $_____

Enter the number and size of Equipment being Replaced or Installed

Sprinkler System		Hood Suppression System		Fire Alarm System	
Stand Pipe		Fire Hydrants		Smoke Control System	
Suppression System		Fire Pumps		Fire Detection System	
Other:					

FLOODPLAIN:

Is the site located within an identified flood hazard area? ☐ YES ☐ NO

Will any portion of the flood hazard area be developed? ☐ YES ☐ NO

Owner/Agent shall verify that any proposed construction and/or development activity complies with the requirements of the National Flood Insurance Program and the Pennsylvania Flood Plain Management Act (Act 166-1978), specifically *Section 60.3*

Lowest Floor Level: _____

HISTORIC DISTRICT:

Is the site located within a Historic District? ☐ YES ☐ NO

If construction is proposed within a Historic District, a certificate of appropriateness may be required by the Municipality.

The applicant certifies that all information on this application is correct and the work will be completed in accordance with the approved constmction documents and PA Act 45 (Uniform Construction Code) and any add itional approved building code requirements adopted by the Municipality. The property owner and applicant assumes the responsibility of locating aU property lines, setback lines, easements, rights-of way, flood areas, etc. Issuance of a pennit and approval of constmction documents shall not be construed as authority to violate, cancel or set aside any provisions of the codes or ord inances of the Municipal ity or any other governin g body. The applicant certifies he/she understands all the applicable codes, ordinances and regulations.

Application for a permit shall be made by the *owner* or lessee of the building or structure, or *agent* of either, or by the *registered design professional* employed in connect ion with the proposed work.

Certificate of occupancy.

§ 403.46(a) A building, structure or facility may not be used or occupied without a certifica te of occupancy issued by a building code official.

§ 403.46(d) A building code official may suspend or revoke a certificate of occupancy when the certi ficate was issued in error, on the basis of incorrect information supplied by the pennit applicant or in violation of the Uniform Construction Code. Before a certificate of occupancy is revoked, a building owner may request a hearing before the board of appeals under § 403.122 (relating to appeals, variances and extensions oftime).

I certify that the code administrator or the code administrator's authorized representative shall have the authority to enter areas covered by such permit at any reasonable hour to enforce the provisions of the code(s) applicable to such permit.

Signature of Owner or Authorized Agent _____ Print Name of Owner or Authorized Agent _____

Address _____ Date _____

Directions to Site:

**********"**********"(FOR ADMINISTRATIVE USE ONLY)**********

ADDITIONAL PERMITS/APPROVALS REQUIRED

STREET CUT/DRIVEWAY	☐ YES	☐ NO	☐ ON FILE	ON-LOT SEPTIC	☐ YES	☐ NO	☐ ON FILE
CUT AND FILL	☐ YES	☐ NO	☐ ON FILE	ZONING	☐ YES	☐ NO	☐ ON FILE
PENNDOT HIGHWAY OCCUPANCY	☐ YES	☐ NO	☐ ON FILE	HARB	☐ YES	☐ NO	☐ ON FILE
DEP FLOODWAY OR FLOODPLAIN	☐ YES	☐ NO	☐ ON FILE	OTHER	☐ YES	☐ NO	☐ ON FILE
SEWER CONNECTION	☐ YES	☐ NO	☐ ON FILE	OTHER	☐ YES	☐ NO	☐ ON FILE

APPROVALS

BUILDING PERMIT DENIED ☐ YES ☐ NO DATE: _____ DATE RETURNED: _____

ISSUED BY:

TOTAL SQ FT USED FOR FEE _____ SqFt TOTAL CONTRACT VALUE USED FOR FEE $ _____

PLAN PERMIT FEE	$	FIRE PERMIT FEE	$
BUILDING PERMIT FEE	$	ACCESSIBILITY PERMIT FEE	$
ELECTRIC PERMIT FEE	$	ENERGY PERMIT FEES	$
PLUMBING PERMIT FEE	$	ADMINISTRATIVE FEES	$
MECHANICAL PERMIT FEE	$	STATE FEES	$

TOTAL CONSTRUCTION PERMIT FEES: $ _____

Residential Permit Application and Submittal Requirements

The following sections located on **page one** must be completed in full :

1. County and Municipality
2. Location of proposed work or improvement, most importantly, site location, tax parcel number and lot number.
3. Type of improvement including a brief description of work.
4. Owner information with complete mailing address.
5. Estimated cost of construction is required to be provided.

The contactor section is required to be completed **only** when work is performed within Municipalities that require contractor registration. However, Code Inspections, Inc. requests a minimum of the primary contractor information to be provided in case correspondence or contact is necessary.

Page two needs to be completed for only the sections that apply to the proposed project, or work to be performed.

Page three needs to be completed for floodplain information and, a signature by the property owner, or agent of the owner must be provided on page three. The bottom of page three is intended for administrative use and will be completed by Code Inspections, Inc. during the application review.

PLANS AND SUBMITTALS

- The submittal shall include one complete set of plans, a plot plan and specification sufficient to indicate the scope of work being proposed. Listed below are some basic examples of information necessary to complete a plan review. Additional information may be requested depending on the intended project. **Any document larger than 11 x 17 must be submitted in electronic format (disc, email, etc.)**
- Project design shall conform to the most current edition of the International Residential Code adopted by the Commonwealth of Pennsylvania.
- Drawings shall specify all site information such as address, lot number, TMP number, owner name and type of work Proposed. This information shall be reflected on all pages.
- Drawings shall include Floor plan showing new construction in comparison to existing, room labels or use of rooms, bearing locations, window and door sizes, header sizes and all other pertinent information. Footing details and specifications shall be provided for all locations. Detail should include a footprint or outline of the scope of work as well as specifying pier or continuous footings where applicable. Pre-cast concrete panels and all other pre-manufactured products shall have manufacturers engineered designs and specs.
- Insulation and thermal values shall be indicated for walls, ceiling, floors, basement walls and slab perimeter.
- Indicate electrical components including locations and sizes.

Swimming Pools

- Provide swimming pools construction specifications.
- Swimming pool enclosures and barriers shall be shown and include fence, gate and gate device details.

Commercial Permit Application and Submittal Requirements

The Application shall be completed as explained in the Residential information listed above.

PLANS AND SUBMITTIALS

The submittal shall include **one complete set of plans and specifications** bearing the signature and seal of a licensed Design Professional. Plans and specifications shall, at minimum, be required to contain the information specified within the sections listed below.

§ 403.42a(b) A permit applicant shall submit an application to the building code official and attach construction documents, including plans and specifications, and information concerning special inspection and structural observation programs, Department of Transportation highway access permits and other data required by the building code official with the permit application. The applicant shall submit three sets of documents.

§ 403.42a(c) A licensed architect or licensed professional engineer shall prepare the construction documents under the Architects Licensure Law (63 P. S. §§ 34.1-34.22), or the Engineer, Land Surveyor and Geologist Registration Law (63 P. S. §§ 148-) 58.2). An unlicensed person may prepare design documents for the remodeling or alteration of a building if there is no compensation and the remodeling or alteration does not relate to additions to the building or changes to the building's structure or means of egress.

§ 403.42a(e) The permit applicant shall submit construction documents in a format approved by the building code official. Construction documents shall be clear, indicate the location, nature and extent of the work proposed, and show in detail that the work will conform to the Uniform Construction Code.

§ 403.42a(1) All of the following fire egress and occupancy requirements apply to construction documents:

§ 403.42a(1)(I) The permit applicant shall submit construction documents that show in sufficient detail the location, construction, size and character of all portions of the means of egress in compliance with the Uniform Construction Code.

§ 403.42a(f)(2) The construction documents for occupancies other than Groups R-2 and R-3 shall contain designation of the number of occupants to be accommodated on every floor and in all rooms and spaces.

§ 403.42a(f)(3) The permit applicant shall submit shop drawings for a fire protection system that indicates conformance with the Uniform Construction Code in accordance with the following: .

§ 403.42a(f)(3)i. The shop drawings shall be approved by the building code official before the start of the system installation.

§ 403.42a(f)(3)ii The shop drawings must contain the information required by the referenced installation standards contained in the " International Building Code."

§ 403.42a(g) Construction documents shall contain the following information related to the exterior wall envelope:

§ 403.42a(g)(I) Description of the exterior wall envelope indicating compliance with the Uniform Construction Code.

§ 403.42a(g)(I) Flashing details.

§ 403.42a(g)(1) Details relating to intersections with dissimilar materials, corners, end details, control joints, intersections at roof, eaves, or parapets, means of drainage, water-resistive membrane and details around openings.

§ 403.42a(h) Construction documents shall contain a site plan that is drawn to scale. The building code official may waive or modify the following site plan requirements if the permit application is for an alteration or repair or if waiver or modification is warranted. Site plan requirements include all of the following:

§ 403.42a(h)(1) The size and location of new construction and existing structures on the site.

§ 403.42a(h)(2) Accurate boundary lines.

§ 403.42a(b)(3) Distances from lot lines.

§ 403.42a(b)(4) The established street grades and the proposed finished grades.

§ 403.42a(h)(5) If the construction involves demolition, the site plan shall indicate construction that is to be demolished and the size and location of existing structures and construction that will remain on the site or plot.

§ 403.42a(h)(6) Location of parking spaces, accessible routes, public transportation stops and other required accessibility features.

§ 403.42a(I) A building code official may waive or modify the submission of construction documents, that are not required to be prepared by a licensed architect or engineer, or other data if the nature of the work applied for does not require review of construction documents or other data to obtain compliance with the Uniform Construction Code. The building code official may not waive the submission of site plans that relate to accessibility requirements.

§ 403.42a(m) An applicant for an annual permit under § 403.42(f) shall complete an application and provide information regarding the system that may be altered and the date that approval was previously provided for the approved electrical, gas, mechanical or plumbing installation.

§ 403.42a(n) A permit applicant shall comply with the permit, certification or licensure requirements of the following laws applicable to the construction:

§ 403.42a(n)(I) The Boiler and Unfired Pressure Vessel Law (35 P. S. §§ 1331 .1- 1331 .19).

§ 403.42a(n)(2) The Propane and Liquefied Petroleum Gas Act (35P. S. §§ 1329.1 - 1329.19).

§ 403.42a(0)(3) The Health Care Facilities Act.

§ 403.42a(0)(4) The Older Adult Daily Living Centers Licensing Act

BENSALEM TOWNSHIP

Building and Planning Department
2400 Byberry Road • Bensalem, PA 19020
Office 215-633-3644 • Fax 215-633-3753

Permit No.	
Date:	
Fee:	

APPLICATION for STREET OPENING

The undersigned applicant hereby makes application for a permit to break open a Township road or street.

Street Name: _____ Tax Parcel No. _____

Address: _____

Purpose of Opening: _____

IMPROVED SURFACE

Length: _____

Width: _____

Total Sq. Footage: _____

UNIMPROVED SURFACE OPENING

Length: _____

Width: _____

Total Sq. Footage: _____

NAME AND ADDRESS OF PERSON FOR WHOM WORK IS BENG PERFORMED:

Name: _____ Address: _____

You must notify the Bensalem Township Engineering Dept. 24 hours in advance of a road opening. Un-inspected restorations will result in removal of all backfill materials. Restorations shall then commence with an inspector present.

The applicant agrees to replace the surface of the highway in the manner provided for by a resolution of Bensalem Township, approved and enacted on April 27, 1981, entitled "Standard Specifications and Design Standards for Roads And Streets" as amended.

The applicant further agrees to assume all liability for all or any damage which may result from the performance of the work done under the permit hereby applied for, and to protect and indemnify the Township against the loss or damage thereof.

The applicant further agrees to perform, fulfill, and comply with all the terms, conditions and provisions of the said ordinance, and all the rules and regulations of the Township of Bensalem.

The applicant further agrees to abide by the rules and regulations set forth in Section 197-22 of *"The Code of Bensalem Township"* regulating the opening or breaking the surface of Township streets or roads, sidewalks or curbs, without first obtaining from the Township the requisite permit.

PLAN OR BLUE PRINT TO BE ATTACHED

The applicant has read and understands the Bensalem Township "Road Restoration Requirements" as attached as a part of this application packet and further agrees to comply with all the requirements set forth therein.

Applicant's Information

Name: _____ Address: _____

Phone No. _____ _____

_____
Signature

A SIGNED APPLICATION IS REQUIRED PRIOR TO ISSUANCE OF PERMIT

FOR OFFICE USE ONLY

Fee: _____ Escrow: _____

Approved By: _____ Date: _____
Township Engineer

BENSALEM TOWNSHIP

Building and Planning Department

2400 Byberry Road Bensalem, PA 19020

215-633-3644 ▪ Fax 215-633-3753

STREET OPENING
ROAD RESTORATION REQUIREMENTS

May 4, 1998

1. Disturbed portions of the highway, including but not limited to, slopes and appurtenances and structures such as guide rails, curbs, signs, markings, drain pipes, driveways and vegetation, shall be restored by the permittee to a condition at least equal to that which existed before the start of work authorized by the permit. Additional restoration may also be required upon written notification, to restore the structural integrity of the pavement or shoulder.
2. If the permittee opens pavement having a bituminous concrete surface and the Township's wearing course is less than five (5) years old, the permittee shall, in addition to the restoration conditions outlined in the permit and in this section, be required to overlay the pavement in accordance with the following conditions"
   - When a longitudinal opening longer than 100 linear feet has been made in the pavement, the permittee shall overlay the traffic lanes in which the openings were made, for the entire length of highway between the openings in a manner authorized by the Engineering Department.
   - When two or more transverse openings have been made within 100 linear feet of pavement, the permittee shall overlay traffic lanes in which the openings were made, for the entire length of highway between the openings, in a manner authorized by the Township.
   - When 4 or more emergency openings have been made by the same permittee within 100 linear feet of pavement, the permittee shall overlay traffic lanes in which the openings were made, for the entire length of highway between the openings, in a manner authorized by the Township.
   - If disturbed lanes adjacent to undisturbed lanes are overlaid, the edge of the disturbed lane shall be saw cut or milled to a depth of 1 ½ inch or the depth of the existing surface course, whichever is less, for the length of the opening to insure a smooth joint with proper elevation and cross section. A full width overlay may be authorized on various highways instead of saw cutting or milling the disturbed lane.
   - If disturbed lanes adjacent to shoulders are overlaid, the shoulder shall be raised with material and in a manner authorized by the Township for the type of existing shoulder so that the overlaid pavement and shoulder edges are at the same elevation.
3. Regardless of the age of the wearing course:
   - If more than 100 linear feet of longitudinal or transverse openings, or both, are made in the pavement the Township may require the permittee to overlay traffic lanes in which the openings were made for the entire length of highway that was opened, if the Township Engineer determines the ride-ability or structural integrity of the pavement has been impaired by the opening.
   - If four or more openings are made by the same permittee within 100 linear feet of pavement, the Township may require the permittee to restore the entire disturbed pavement between the openings by milling, planeing or other authorized method and overlaying the entire disturbed pavement.
4. Aggregate used in a bituminous overlay wearing course shall comply with skid resistance lever (SRL) criteria specified in PA DOT Design Manual, Part 2, Chapter 11.
5. If an opening is made in a bituminous concrete pavement within 3 feet from the edge of the pavement or other longitudinal joint or opening, the surface restoration shall be extended to the edge of pavement or other longitudinal joint or opening.
6. At each end of overlay, the permittee shall install a paving notch by milling, planeing or other authorized method and provide a minimum of 10 foot transition.
7. The transition areas at each end of an overlay shall follow the contour of the surrounding surface.
8. When pavement markings on more than 100 linear feet of highway are covered or destroyed by the permitted work, including overlays, they shall be replaced with temporary pavement markings before opening the disturbed pavement to traffic.

   When the pavement surface is restored, pavement markings that were covered or destroyed shall be replaced in their former location.
9. Restored openings in the pavement or paved shoulder shall be sealed under Section 401(j)(3) of PA DOT Publication 409 in the cases of bituminous concrete or Section 501.3(n) of Publication 408 in the case of cement concrete.

BENSALEM TOWNSHIP

Building and Planning Department
2400 Byberry Road Bensalem, PA 19020
215-633-3644 ▪ Fax 215-633-3753

STREET OPENING
ROAD RESTORATION REQUIREMENTS

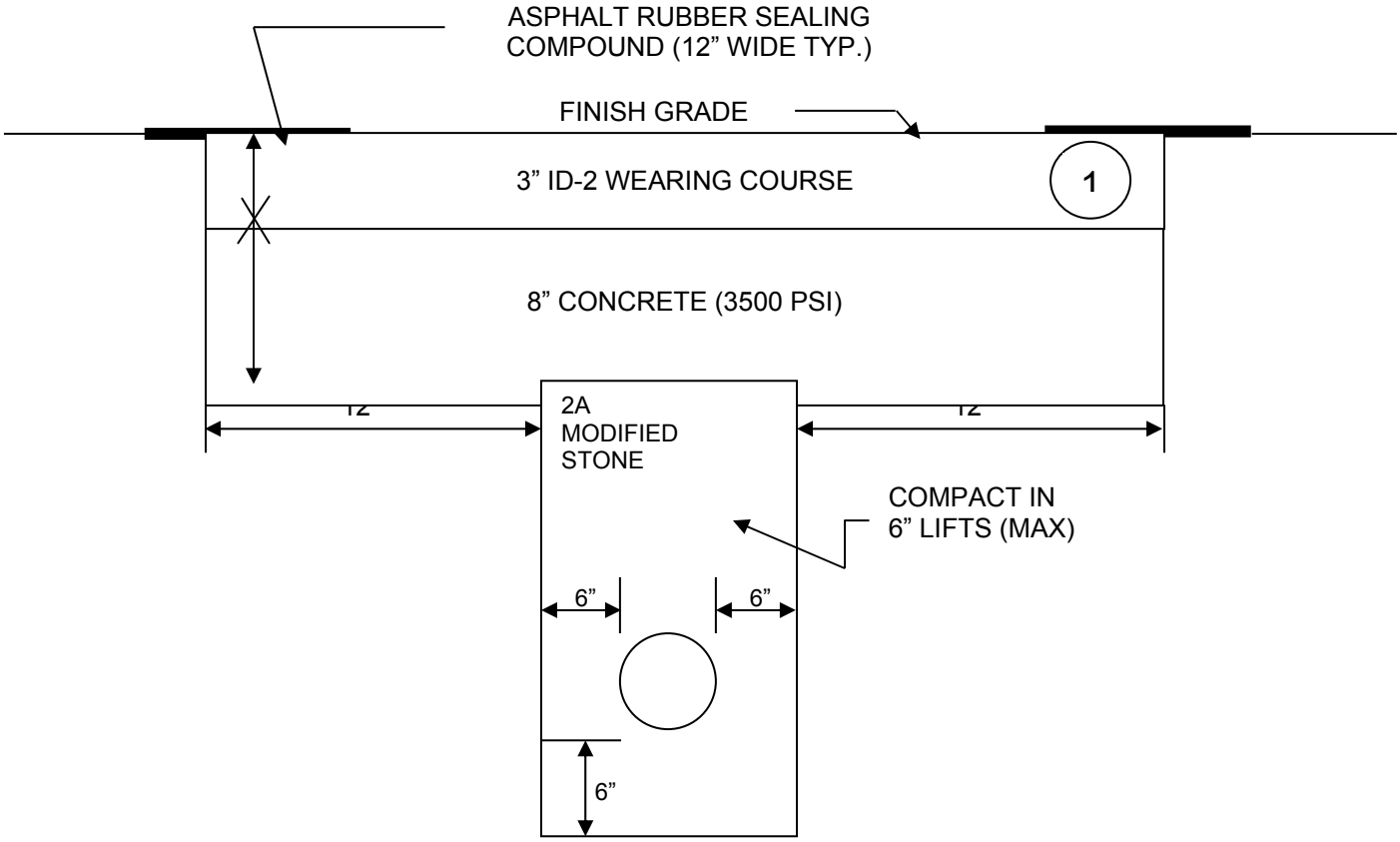

TYPICAL TRENCH RESTORATION IN PAVED CARTWAY N.T.S.

1. Certain conditions may require overlay of travel line or entire street width.
   See Bensalem Township Road Restoration requirements.

2. Trench work must be completed at 3:30 p.m. Trench area must be secured and road reopened by 5:00 p.m. If roadway is not secure by 5:00 p.m. contractors will incur additional consulting fees based on an hourly basis.

3. Final restoration on openings for new construction shall be completed prior to occupancy. The restoration must be completed within 30 days. Failure to comply will result in a $1500 escrow in addition to any other escrow previously required.

ALL WORK TO BE DONE IN ACCORDANCE WITH PENNDOT SPECIFICATIONS
PUBLICATION 408 AS AMENDED

SAMPLE SEWER REPLACEMENT PLOT

1. Show work area with length and width of excavation.
2. Show location of trap.
3. Show distance from center of roadway to work area
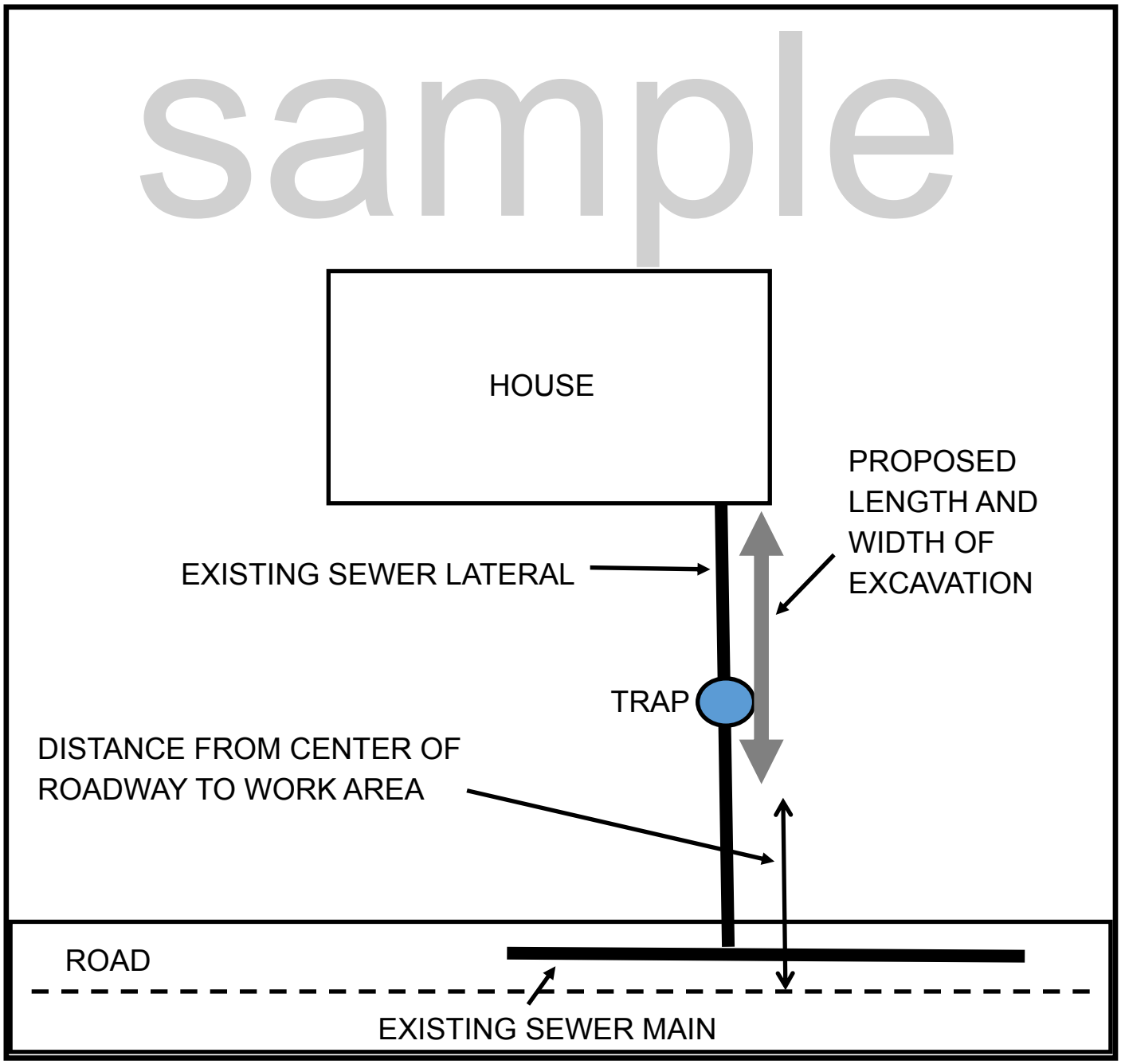
This site plan is intended for an example only. Your specific site plan may vary depending on the locations of structures and layout of your property.