Carroll Engineering Corporation

October 3, 2019

Sent Via: Hand Delivery

Kenneth Farrall
Director of Building and Planning/Zoning Officer
Bensalem Township Municipal Building
2400 Byberry Road
Bensalem, PA 19020

Dear Mr. Farrall:

Subject: VMC Pole Barn, Bensalem Township School District
Subdivision and Land Development Application Submission

On behalf of the Bensalem Township School District, Carroll Engineering Corporation is hereby submitting the attached documentation for your review and processing.

- Twenty-Five (25) copies of the Subdivision and Land Development Application
- Twenty-Five (25) copies of the Preliminary/Final Plan set, dated June 4, 2019
- Three (3) Stormwater Management Report, dated June 2019
- Digital CD of Submission Package
- Checks made out to "Bensalem Township Bldg. & Planning" for the following:
  - $3,125.00 Escrow Engineer
  - $3,750.00 Traffic Engineer
  - $275.00 Application Fee
  - $1,875.00 Escrow Solicitor

Thank you for your timely attention to this matter. Should you have any questions or require additional information, please do not hesitate to contact me directly at 215-268-3808 or jkoutsouros@carrollengineering.com.

Very truly yours,

CARROLL ENGINEERING CORPORATION

John L. Koutsouros, P.E.
Planning & Site Design Dept. Manager

JLK:cam
Enclosure
cc: John Steffy, Director of Business Operations, Bensalem Twp. School District
Joseph Knowles, Council President, Bensalem Township

BENSALEM TOWNSHIP

Building and Planning Department
2400 Byberry Road • Bensalem PA 19020
215-633-3644 • FAX 215-633-3653

SUBDIVISION AND LAND DEVELOPMENT APPLICATION

SITE AND PLAN CHARACTERISTICS

CHECK ONE:	DATE OF SUBMISSION: July 25, 2019	
☐ Sketch Plan	Tax Parcel #	02-033-106
☐ Lot Line Change	Location	3000 Donallen Dr., Bensalem, PA 19020
☐ Minor Subdivision	Zoning Classification	R-11
☐ Minor Land Development	Proposed # of Lots or Leaseholds	1
☐ Preliminary Subdivision	Area of Commercial Bldg of Addition (sf)	14,125
☒ Preliminary Land Development	Name of Development	VMC Pole Barn
☐ Final Subdivision	Proposed Use	Building, parking lot and canopy parking
☒ Final Land Development	Site Area (ac)	24.97
☐ Conditional Use	Development Area (ac)	0.96

SUBMISSION IS TO INCLUDE A DISC WITH APPLICATION AND PLAN(S) IN PDF FILE FORMAT or email same to lalston@bensalemPA.gov.

1. Name, address & phone No. of Applicant:
   Bensalem Township School District
   3000 Donallen Dr., Bensalem, PA 19020
   215-750-2800
   Daytime Contact Number
   Signature

2. Name, address & phone No. of Attorney:
   (If other than applicant)
   Signature
   Daytime Contact Number

3. Name, address & phone No. of Owner:
   Bensalem Township School District
   3000 Donallen Dr., Bensalem, PA 19020
   215-750-2800
   Daytime Contact Number
   Signature

4. Name, address & phone No. of Person Designing Plan:
   Carroll Engineering Corporation
   John Koutsouros, P.E.
   949 Easton Rd., Warrington, PA 18976
   215-248-3808
   Daytime Contact Number
   Signature

5. Has parcel ever been subject to subdivision or land development approval? No
   If Yes: Date of Approval
   Plan Title
   Recording Date
   Plan Book
   Page

6. Has parcel ever received relief from the Zoning Hearing Board? No

If yes, list date of decision and attach copy of the decision.

7. Deed restrictions that apply or are being contemplated. If no restrictions, state none. If yes, attach copy.

None

8. List proposed improvements and utilities to be installed:

12,325 square foot Pole Barn Building

1,800 square foot Canopy Parking

9. List title of each plan, report and any other documents submitted:

1. Record Plan

2. Existing Features & Demolition Plan

3. Erosion & Sedimentation Control Plan

4. Erosion & Sedimentation Control Notes and Details

5. Stormwater Management Report

10 List presence of floodplain, wetlands, steep slopes or any other environmental features on site:

63,465 sf of grass

830,356 sf of woodland

11 List all variances and special exceptions that will be required from the Zoning Hearing Board for this application:

N/A

12 List all zoning changes, conditional uses and waivers that will be required for this application:

N/A

NOTE: Plan requirements can be found in The Code of the Township of Bensalem, Chapter 201

FOR MUNICIPAL USE ONLY:	
Date Received:	
Application Fee:	
Escrow:	

Rev 7/2016

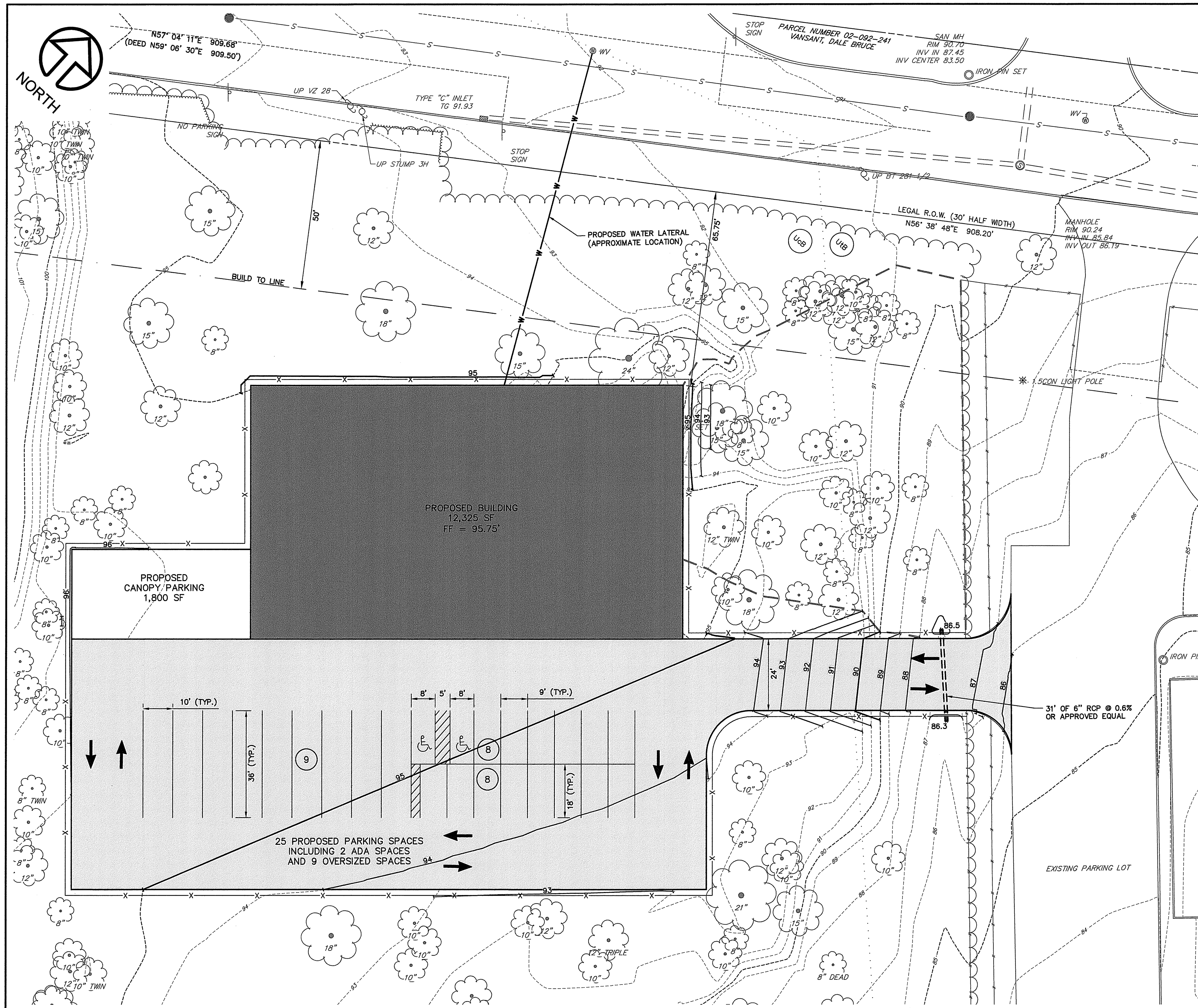

LEGEND

- ----- 100 ----- — EXISTING CONTOURS
- — EXISTING FENCE
- — EXISTING PAVEMENT
- — EXISTING STORM LINE
- — EXISTING SEWER PIPING
- — EXISTING SOIL LINE
- — EXISTING TREE
- — SOILS DELINEATOR
- — EXISTING WATER VALVE
- — EXISTING TREE LINE
- — BUILD TO LINE
- — EXISTING UTILITY POLE
- — EXISTING SIGN
- — EXISTING MANHOLE
- — EXISTING INLET
- — EXISTING LIGHT POLE
- — EXISTING FIRE HYDRANT
- — 6" RCP
- 95 — PROPOSED CONTOURS
- — PROPOSED FENCE
- — PROPOSED WATER LATERAL
- — PROPOSED POROUS PARKING AREA
- — PROPOSED BUILDING
- — DRAINAGE AREA TO DRIVEWAY PIPE

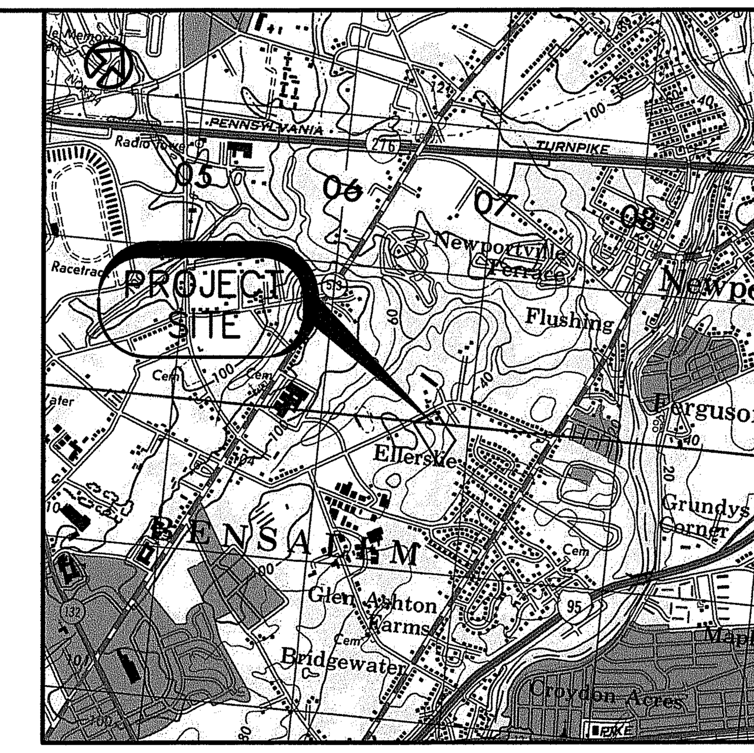

LOCATION MAP
SCALE: 1"=1000'

Carroll Engineering Corporation
CORPORATE OFFICE
949 - EASTON - ROAD
WARRINGTON, - PA - 18976
PHONE: 215-343-5700
FAX: 215-343-0875
630 Freedom Business Ctr., 3rd Fl. King of Prussia, PA 19406 Phone: 610-489-5100
105 Raider Boulevard, Suite 206 Hillsborough, NJ 08844 Phone: 908-874-7500 Fax: 908-874-5762
101 Lindenwood Drive, Suite 225 Malvern, PA 19355 Phone: 484-875-3075
www.carrollengineering.com

COMMONWEALTH OF PENNSYLVANIA REGISTERED PROFESSIONAL JOHN L. KOUTSOUROS ENGINEER PE087653

6/4/19

SURVEY CERTIFICATION

I HEREBY CERTIFY THAT I AM A REGISTERED PROFESSIONAL LAND SURVEYOR, LICENSED IN COMPLIANCE WITH THE LAWS OF THE COMMONWEALTH OF PENNSYLVANIA, THAT INFORMATION SHOWN ON THIS PLAN REPRESENTS A TRUE AND ACCURATE SURVEY OF THIS PROPERTY COMPLETED BY CARROLL ENGINEERING CORPORATION IN JANUARY, 2015, AND THAT ALL MARKERS SHOWN ACTUALLY EXIST IN THE LOCATION OF THE TYPE AND MATERIAL AS SHOWN.

CARROLL ENGINEERING CORPORATION
STEPHEN R. MURPHY P.L.S. #SU056907

SEAL DATE

OWNER'S CERTIFICATION

I, ____________, HEREBY CERTIFY THAT ____________, HAVE LAID OUT UPON OUR LAND SITUATED IN THE TOWNSHIP OF BENSALEM, COUNTY OF BUCKS, COMMONWEALTH OF PENNSYLVANIA, LOTS AND STREETS ACCORDING TO THE ACCOMPANYING PLAN WHICH IS INTENDED TO BE FORTHWITH RECORDED. WITNESS OUR HAND AND SEAL THIS

____________ DAY OF ____________, 20___.

SIGNATURE

COMMONWEALTH OF PENNSYLVANIA:

COUNTY OF____________,
ON THE ____________DAY OF ____________, 20 ____, BEFORE ME THE SUBSCRIBER, A NOTARY PUBLIC OF THE COMMONWEALTH OF PENNSYLVANIA, PERSONALLY APPEARED ____________, WHO ACKNOWLEDGED THIS PLAN TO BE OFFICIAL PLAN OF LOTS AND PROPERTY SHOWN THERETO IN THE TOWNSHIP OF BENSALEM, COUNTY OF BUCKS, COMMONWEALTH OF PENNSYLVANIA, AND DESIRED THAT THIS PLAN BE RECORDED ACCORDING LAW.

WITNESS MY HAND AND NOTARIAL SEAL THIS
____________ DAY OF ____________, 20___.

NOTARY PUBLIC
(SEAL)

MY COMMISSION EXPIRES: ____________

REVIEWED BY THE TOWNSHIP PLANNING COMMISSION

THIS SUBDIVISION AND LAND DEVELOPMENT PLAN WAS REVIEWED BY THE BENSALEM TOWNSHIP PLANNING COMMISSION ON THIS

____________ DAY OF ____________, 20___.

ATTEST:

SECRETARY CHAIRMAN

REVIEWED BY THE BENSALEM TOWNSHIP COUNCIL

THIS SUBDIVISION AND LAND DEVELOPMENT PLAN WAS REVIEW BY RESOLUTION OF THE TOWNSHIP COUNCIL OF BENSALEM TOWNSHIP THIS

____________ DAY OF ____________, 20___.

REVIEWED BY THE TOWNSHIP ENGINEER

THIS SUBDIVISION AND LAND DEVELOPMENT PLAN WAS REVIEWED BY THE APPOINTED TOWNSHIP ENGINEER FOR BENSALEM TOWNSHIP ON THIS

____________ DAY OF ____________, 20___.

TOWNSHIP ENGINEER

REVIEWED BY THE BUCKS COUNTY PLANNING COMMISSION

THIS SUBDIVISION AND LAND DEVELOPMENT PLAN WAS REVIEWED BY THE BUCKS COUNTY PLANNING COMMISSION ON THE

____________ DAY OF ____________, 20___, BCPC # ____

CHAIRMAN

DIRECTOR

CERTIFICATION FOR RECORDING

THIS SUBDIVISION AND LAND DEVELOPMENT PLAN WAS RECORDED IN THE OFFICE OF RECORDER OF DEEDS FOR BUCKS COUNTY, AT DOYLESTOWN, PENNSYLVANIA, THIS

____________ DAY OF ____________, 20___, BCPC # ____

RECORDER OF DEEDS

RECORD PLAN

VMC POLE BARN

SITUATED IN
BENSALEM TOWNSHIP, BUCKS COUNTY, PENNSYLVANIA
PREPARED FOR
BENSALEM SCHOOL DISTRICT
3100 DONALLEN DRIVE
BENSALEM, PA 19020

NO.	DATE	DESCRIPTION	INITIALS

SOILS LEGEND:

SYMBOL	SOIL TYPE
UcB	—UDORTHENTS, SANDY
UtB	—URBAN LAND—MATAPEAKE COMPLEX 0% TO 8% SLOPES

VARIANCE REQUEST

1. SECTION 232–351.B.(5)a. – TREE REPLACEMENT
2. SECTION 232–351.B.(5)b. – TREE REPLACEMENT
3. SECTION 232–351.B.(5)c. – TREE REPLACEMENT

NOTES:

1. CONTRACTOR SHALL COORDINATE WITH THE OWNER FOR FENCE DETAILS AND SPECIFICATION.

CALL BEFORE YOU DIG!

PENNSYLVANIA LAW REQUIRES
3 WORKING DAYS NOTICE FOR
CONSTRUCTION PHASE AND 10 WORKING
DAYS IN DESIGN STAGE–STOP CALL

PENNSYLVANIA ONE CALL SYSTEM, INC.

SERIAL NUMBER 20170302177

1–800–242–1776

SURVEY NOTES

1. TOPOGRAPHIC SURVEY WAS PERFORMED BY CARROLL ENGINEERING CORPORATION IN NOVMBER OF 2018 AND REPRESENTS EXISTING CONDITIONS AT THAT TIME.
2. HORIZONTAL DATUM IS NAD 1983 (PA STATE PLANE SOUTH).
3. VERTICAL DATUM IS NAVD 1988.
4. LOCATIONS OF EXISTING UTILITIES SHOWN HEREON HAVE BEEN DEVELOPED FROM ABOVE GROUND OBSERVATIONS AT THE SITE. COMPLETENESS OR ACCURACY OF LOCATION CANNOT BE GUARANTEED. ALL CONTRACTORS AND OTHER PERSONS UTILIZING THIS PLAN AND THE INFORMATION CONTAINED HEREON ARE CAUTIONED TO COMPLY WITH THE REQUIREMENTS OF THE PENNSYLVANIA ACT 287, AS AMENDED, TITLED "EXCAVATION AND DEMOLITION WORK PROTECTION OF UNDERGROUND UTILITIES". EACH INDIVIDUAL USING THIS PLAN MUST VERIFY THE DEPTH AND LOCATION OF ALL UNDERGROUND FACILITIES BEFORE STARTING WORK.
5. THIS SURVEY WAS PERFORMED WITHOUT THE BENEFIT OF A TITLE REPORT. ADDITIONAL EASEMENTS AND/OR RIGHT–OF–WAYS MAY EXIST.
6. PROPERTY LINES AND RIGHT–OF–WAYS ARE BASED ON LOCATED MONUMENTATION ALONG WITH THE FOLLOWING REFERENCED PLANS AND DEEDS:
   A. RECORDED PLAN PREPARED BY EDWARD PICKERING JR, TITLED "REVISED PLAN OF ELLERSLIE", APPROVED BY THE BUCKS COUNTY PLANNING COMMISSION IN JUNE OF 1942. (RECORDED PLAN: BOOK 3, PAGE 15)
   B. RECORDED PLAN PREPARED BY JOSEPH RACE, TITLED "PLAN OF ELLERSLIE ADDITION", APPROVED BY THE BUCKS COUNTY PLANNING COMMISSION ON DECEMBER 8, 1952. (RECORDED PLAN: BOOK 6, PAGE 15)
   C. PLAN PREPARED BY BENJAMIN C. QUEEN, TITLED "FINAL PLAN – BRIDGEWATER INDUSTRIAL PARK, SEC. 2", APPROVED BY THE BENSALEM TOWNSHIP PLANNING COMMISION ON JUNE 28, 1972. (RECORDED PLAN: BOOK 40B, PAGE 102)
   D. DEED OF RECORD (BOOK 1664, PAGE 1459)
   E. RIGHT–OF–WAY OF BYBERRY ROAD IS BASED ON THE EXISTING CARTWAY.

ZONING SUMMARY

1. OWNER/APPLICANT: BENSALEM TOWNSHIP SCHOOL DISTRICT
2. PARCEL ID NUMBER: 02–033–106 (TOTAL AREA: 24.97 ACRES)
3. EXISTING ZONING: R–11
   PROPOSED ZONING: R–11
   PROPOSED USE: (4) MUNICIPAL BUILDING AND MUNICIPAL USE
4. DIMENSIONAL REQUIREMENTS:

REQUIREMENT	REQUIRED	EXISTING	PROPOSED
MAXIMUM IMPERVIOUS SURFACE RATIO	40% (435,158 SF)	17.8% (194,075 SF)	19.3% (210,249 SF)
MAXIMUM BUILDING COVERAGE RATIO	20%	1.06%	2.36%
MINIMUM FRONT YARD	50 FT	101.56 FT	65.75 FT
MINIMUM SIDE YARD (EACH)	50 FT	180.29 FT	180.29 FT
MINIMUM REAR YARD	40 FT	751.89 FT	751.89 FT
MAXIMUM BUILDING HEIGHT	35 FT	<35 FT	<35 FT

IMPERVIOUS SURFACE TABLE

EXISTING IMPERVIOUS AREA	= 194,075 SF
PROPOSED BUILDING	= 12,325 SF
PROPOSED CANOPY PARKING LOT	= 1,800 SF
PROPOSED PERVIOUS PARKING LOT	= 2,049 SF
TOTAL IMPERVIOUS AREA	= 210,249 SF (4.83 ACRES)

TREE REPLACEMENT REQUIREMENTS (SECTION 232–351.B.5)

EXISTING TREE (DBH)	REPLACEMENT RATIO (2.5" DBH)	REMOVED AMOUNT	REPLACED AMOUNT
8" TO 12"	2	47	94
12" TO 18"	3	9	27
OVER 18"	5	3	15
		TOTAL	136

SITE CAPACITY CALCULATIONS

WOODLANDS (19.06 ACRES X 0.50) = 9.53 ACRES (0.98 ACRES DISTURBED)

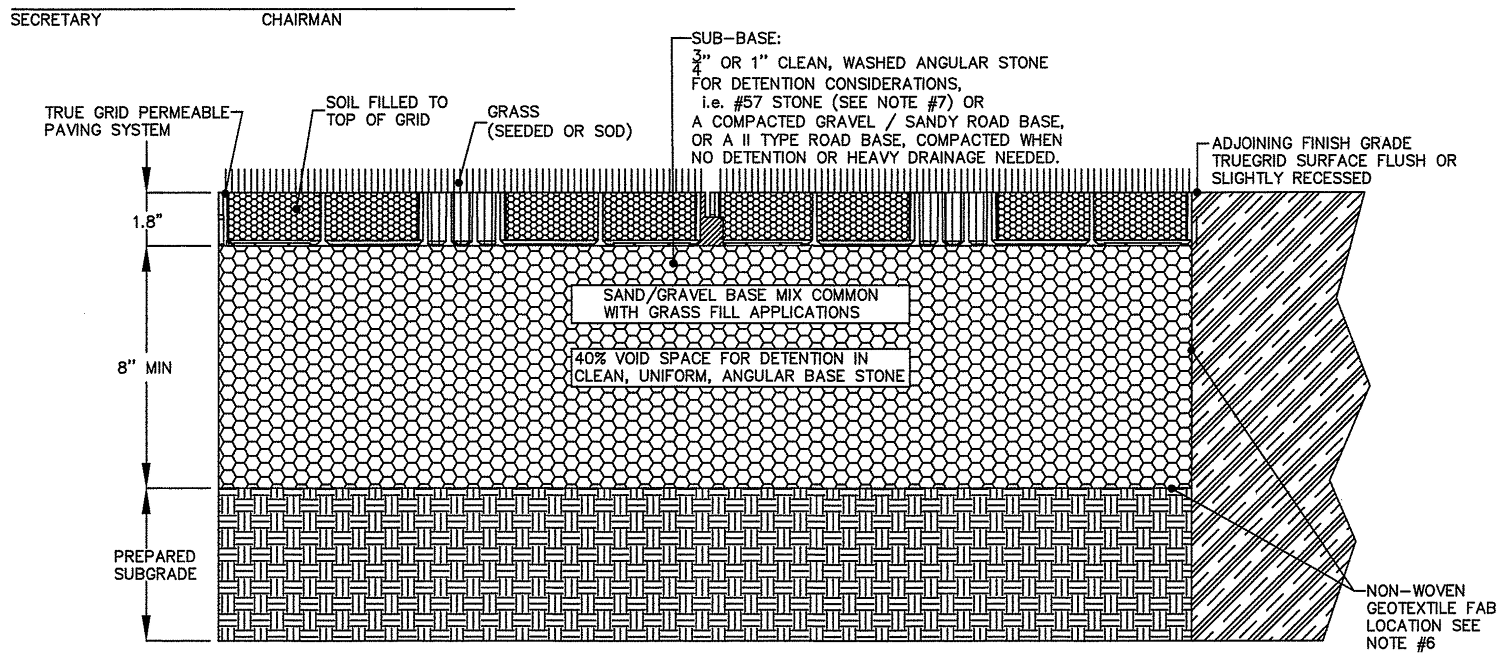

POROUS PAVEMENT DETAIL
NTS

NOTES:

1. SUB–BASE DEPTH AND PREPARATION IS DEPENDENT ON SITE CONDITIONS PLUS LOADING REQUIREMENTS.
2. TRUEGRID PRO PLUS PRODUCTS ARE SUFFICIENTLY RATED FOR H–20/ HS–20 LOADING AND GREATER.
3. TYPICAL SEEDING OR HYDROSEEDING METHOD FOR GRASS GROWTH ARE ACCEPTABLE WITH TRUEGRID.
4. SOD CAN BE LAID ON SOIL FILLED GRID FOR IMMEDIATE GRASS (TYPICAL FOR FIRE LANES).
5. FOR HIGHER TRAFFIC SOD INSTALLATIONS, RECESS SOIL LEVEL WITHIN TRUEGRID AND PRESS IN SOD SO THAT TOP OF GRID IS AT SOIL LEVEL.
6. NON–WOVEN GEOTEXTILE FABRIC REQUIRED BETWEEN SUBGRADE & SUBBASE AND WRAP AROUND SIDE OF EXCAVATION.
7. FILTER FABRIC MAY BE REQUIRED BETWEEN TRUEGRID AND SUB–BASE MATERIAL IF HIGH VOID RATIO IN SUB–BASE MATERIALS.
8. NO STAKING NECESSARY WITH TRUEGRID RPO PLUS WHEN SLOPE IS BELOW 10 DEGREES, ASSESS PROJECT, AS NEEDED.
9. FINAL ENGINEERED CROSS SECTION AGGREGATES AND DEPTH SHOULD ALLOW FOR EXPECTED INFILTRATION RATES, STORAGE CAPACITIES, OUTLET FLOW RATES, AND OTHER SITE SPECIFIC CONDITIONS AND LOAD REQUIREMENTS.
10. THIS CROSS SECTION IS FOR INFORMATION ONLY.
11. USE TRUEGRID PRO PLUS OR APPROVED EQUAL.

GRAPHIC SCALE
20 0 10 20 40 80
(IN FEET)
1 inch = 20 ft.

DATE	06–04–2019
CADD FILE	1814580007
JOB NO	18–1458
DSG BY	JLK
DWN BY	YPC
CKD BY	JLK
SCALE	1" = 20'
DRAWER NUMBER	–
SHEET	1 OF 4 SHEETS

DRAWING NUMBER
C–101

\\cec–file\Newforma\DataStore\181458.00\CAD\DRAWING\1814580007.dwg Jun 11, 2019 10:52am jkoutsouros Eref: 1814580004 1814580005 1814580002

COPYRIGHT © – 2019 CARROLL ENGINEERING CORPORATION – ALL RIGHTS RESERVED

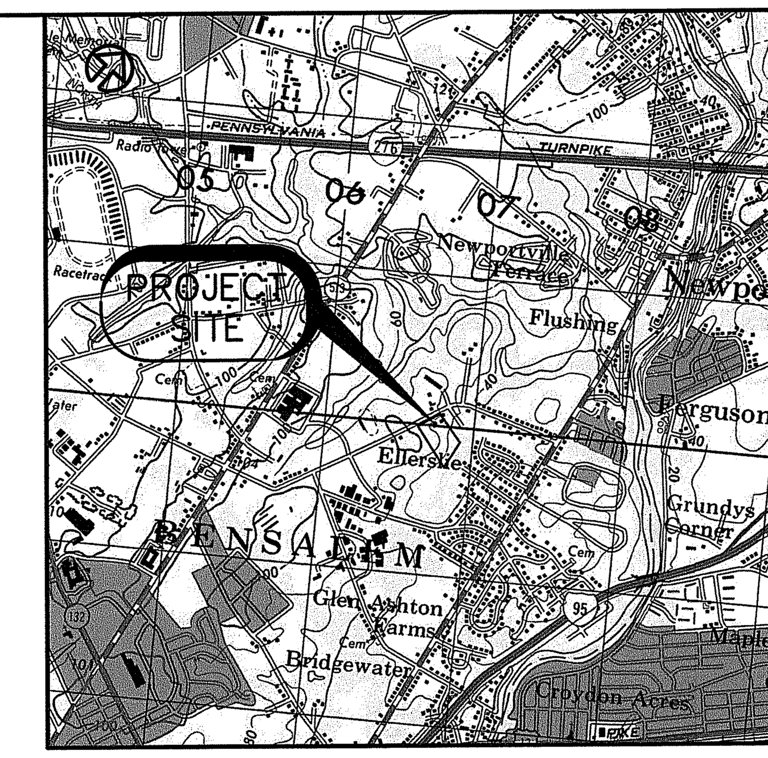

LOCATION MAP
SCALE: 1"=1000'

Carroll Engineering Corporation
CORPORATE OFFICE
949 - EASTON - ROAD
WARRINGTON, - PA - 18976
PHONE: 215-343-5700
FAX: 215-343-0875
630 Freedom Business Ctr., 3rd Fl. King of Prussia, PA 19406 Phone: 610-489-5100
105 Raider Boulevard, Suite 206 Hillsborough, NJ 08844 Phone: 908-874-7500 Fax: 908-874-5762
101 Lindenwood Drive, Suite 225 Malvern, PA 19355 Phone: 484-875-3075
www.carrollengineering.com

COMMONWEALTH OF PENNSYLVANIA
REGISTERED PROFESSIONAL
JOHN L. KOUTSOUROS
ENGINEER
PE067653

EXISTING FEATURES & DEMOLITION PLAN

VMC POLE BARN

SITUATED IN
BENSALEM TOWNSHIP, BUCKS COUNTY, PENNSYLVANIA
PREPARED FOR
BENSALEM SCHOOL DISTRICT
3100 DONALLEN DRIVE
BENSALEM, PA 19020

LEGEND

- ----- 100 ----- — EXISTING CONTOURS
- — EXISTING FENCE
- — EXISTING PAVEMENT
- ——S—— — EXISTING STORM LINE
- ====== — EXISTING SEWER PIPING
- — EXISTING SOIL LINE
- — EXISTING TREE
- — EXISTING TREE (TO BE REMOVED)
- (AbB) — SOILS DELINEATOR
- — EXISTING WATER VALVE
- — EXISTING TREE LINE
- — BUILD TO LINE
- — EXISTING UTILITY POLE
- — EXISTING SIGN
- — EXISTING MANHOLE
- — EXISTING INLET
- — EXISTING LIGHT POLE
- — EXISTING FIRE HYDRANT

SOILS LEGEND:

SYMBOL	SOIL TYPE
UcB	—UDORTHENTS, SANDY
UtB	—URBAN LAND–MATAPEAKE COMPLEX 0% TO 8% SLOPES

GRAPHIC SCALE
20 0 10 20 40 80
(IN FEET)
1 inch = 20 ft.

NO.	DATE	DESCRIPTION	INITIALS

DATE	06-04-2019
CADD FILE	1814580007
JOB NO	18-1458
DSG BY	JLK
DWN BY	YPC
CKD BY	JLK
SCALE	1" = 20'
DRAWER NUMBER	–
SHEET	2 OF 4 SHEETS

DRAWING NUMBER
CV–101

CALL BEFORE YOU DIG!
PENNSYLVANIA LAW REQUIRES
3 WORKING DAYS NOTICE FOR
CONSTRUCTION PHASE AND 10 WORKING
DAYS IN DESIGN STAGE–STOP CALL

PENNSYLVANIA ONE CALL SYSTEM, INC.
SERIAL NUMBER 20170302177
1-800-242-1776

\\cec-file\NewformaDataStore\181458.00\CAD\DRAWING\1814580007.dwg Jun 11, 2019 10:54am jkoutsouros Eref: 1814580004
1814580005
1814580002

COPYRIGHT © – 2019 CARROLL ENGINEERING CORPORATION – ALL RIGHTS RESERVED

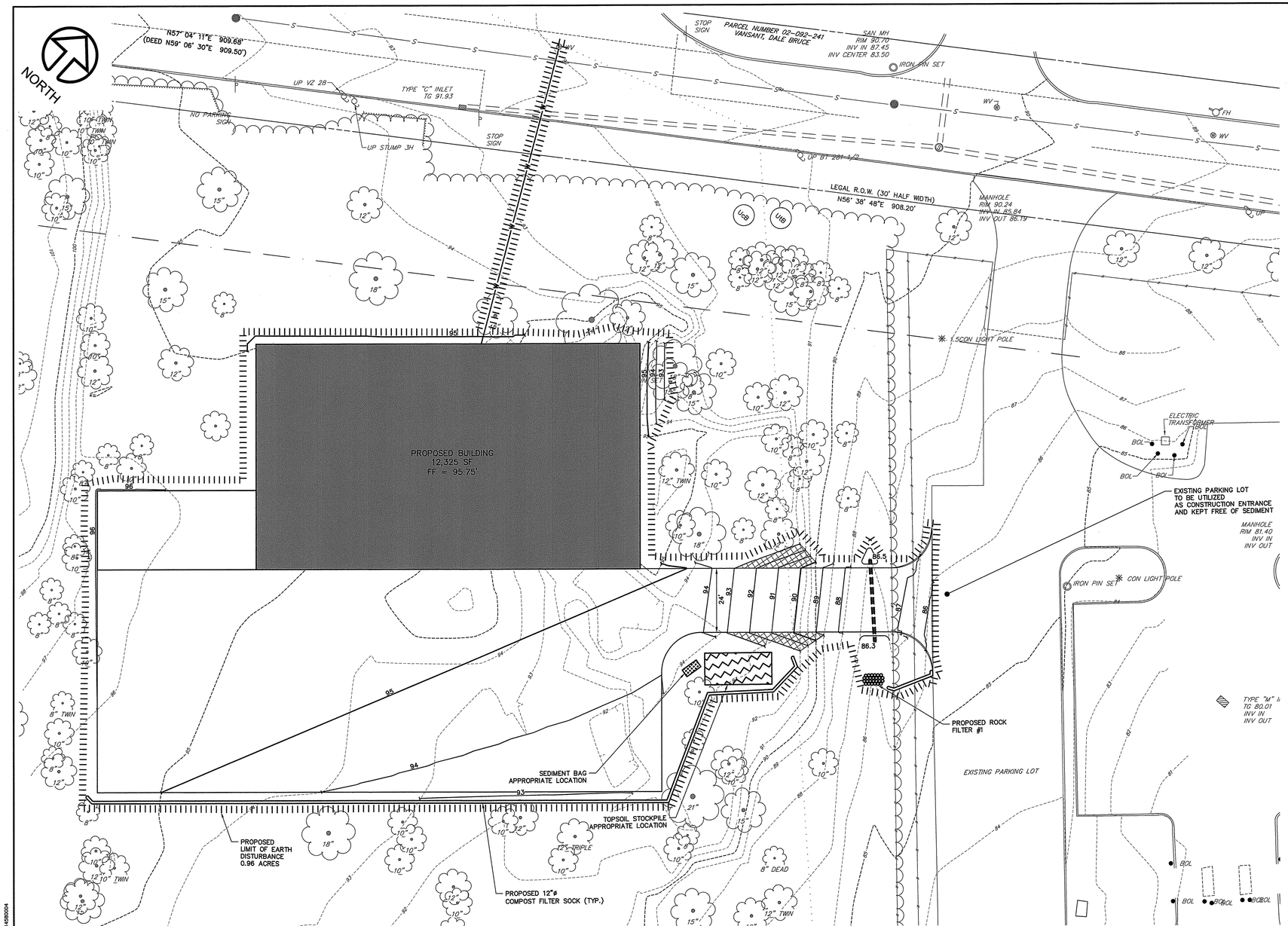

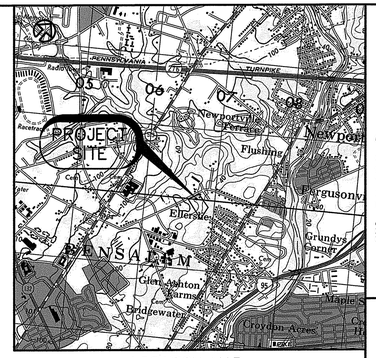

LOCATION MAP
SCALE: 1"=1000'

CONSTRUCTION SEQUENCE:

1. AT LEAST 7 DAYS PRIOR TO ANY EARTH DISTURBANCE ACTIVITIES (INCLUDING CLEARING AND GRUBBING), THE OWNER AND/OR OPERATOR SHALL INVITE ALL CONTRACTORS, THE LANDOWNER, APPROPRIATE MUNICIPAL OFFICIALS, E&SPC PLAN PREPARER, PCSM PLAN PREPARER, AND A REPRESENTATIVE FROM THE AUTHORIZED COUNTY CONSERVATION DISTRICT TO AN ON-SITE PRECONSTRUCTION MEETING.
2. UPON INSTALLATION OR STABILIZATION OF ALL THE PERIMETER SEDIMENT CONTROL BMP(S) AND AT LEAST 3 DAYS PRIOR TO PROCEEDING WITH THE BULK EARTH DISTURBANCE ACTIVITIES, THE PERMITTEE OR CO-PERMITTEE SHOULD PROVIDE NOTIFICATION TO THE PENNSYLVANIA DEPARTMENT OF ENVIRONMENTAL PROTECTION OR AUTHORIZED COUNTY CONSERVATION DISTRICT.
3. AT LEAST 3 DAYS PRIOR TO STARTING EARTH DISTURBANCE ACTIVITIES, OR EXPANDING INTO AN AREA PREVIOUSLY MARKED, THE PENNSYLVANIA ONE CALL SYSTEM INC. SHALL BE CONTACTED AT 1-800-242-1776 FOR THE LOCATION OF EXISTING UNDERGROUND UTILITIES.
4. ALL EARTH DISTURBANCE ACTIVITIES SHALL PROCEED IN ACCORDANCE WITH THIS CONSTRUCTION SEQUENCE. DEVIATION FROM THIS MUST BE APPROVED BY THE PENNSYLVANIA DEPARTMENT OF ENVIRONMENTAL PROTECTION OR AUTHORIZED COUNTY CONSERVATION DISTRICT PRIOR TO IMPLEMENTATION. EACH STEP OF THE SEQUENCE SHALL BE COMPLETED BEFORE PROCEEDING TO THE NEXT STEP, EXCEPT WHERE NOTED.
5. NO MORE THAN 15,000 SQUARE FEET OF DISTURBED AREA SHOULD BE BROUGHT TO FINAL GRADE BEFORE INITIATING SEEDING AND MULCHING OPERATIONS.
6. UPON TEMPORARY CESSATION OF WORK (4 DAYS OR MORE, OR AS SOON AS FINAL GRADING HAS BEEN COMPLETED), IMMEDIATE STABILIZATION SHOULD COMMENCE.
7. FIELD-MARK LIMITS OF EARTH DISTURBANCE.
8. INSTALL COMPOST FILTER SOCK AND ROCK FILTER PER PLAN LOCATIONS.
9. CLEAR AND GRUB SITE IN PREPARATION FOR PARKING LOT EXCAVATION. STOCKPILE TOPSOIL AT DESIGNATED LOCATION PER THE PLAN.
10. RUNOFF FROM WITHIN THE EXCAVATION SHALL BE COLLECTED AND PUMPED THROUGH A SEDIMENT FILTER BAG PRIOR TO BEING DISCHARGED. SEDIMENT BAG SHALL BE PLACED ON A DESIGNATED GRASS AREA. EXCAVATED MATERIAL NOT SUITABLE FOR BACKFILL SHALL BE REMOVED FROM THE SITE AND DISPOSED OF IN ACCORDANCE WITH THE STANDARD EROSION & SEDIMENT CONTROL PLAN NOTES.
11. COMMENCE INSTALLATION OF THE PROPOSED PARKING LOT, CANOPY PARKING, AND BUILDING .
12. FINISH GRADE THE REMAINING SITE AREA. PLACE PERMANENT VEGETATIVE STABILIZATION.
13. ONLY UPON ACHIEVING PERMANENT SITE STABILIZATION SHALL THE PERIMETER E&S CONTROL DEVICES BE REMOVED.
14. EXCAVATED MATERIAL NOT SUITABLE FOR BACKFILL SHALL BE REMOVED FROM THE SITE AND DISPOSED OF IN ACCORDANCE WITH THE STANDARD EROSION & SEDIMENTATION CONTROL PLAN NOTES.
15. REMOVE TEMPORARY BMP(S) UPON PERMANENT STABILIZATION OF THE DISTURBED AREA TRIBUTARY TO EACH BMP. PERMANENT STABILIZATION IN GRASSED AREAS IS CONSIDERED UNIFORM 70% PERENNIAL VEGETATIVE COVER OVER THE ENTIRE DISTURBED AREA, AND TEMPORARY PAVING OR SUBBASE ARE ACCEPTABLE FOR PAVED AREAS.

LEGEND

100 — EXISTING CONTOURS	EXISTING MANHOLE
EXISTING FENCE	EXISTING INLET
EXISTING PAVEMENT	12" SQUASH PIPE
EXISTING STORM LINE	PROPOSED CONTOURS
EXISTING SEWER PIPING	PROPOSED FENCE
EXISTING SOIL LINE	PROPOSED WATER LATERAL
EXISTING TREE	PROPOSED COMPOST FILTER SOCK
SOILS DELINEATOR	LIMIT OF EARTH DISTURBANCE
EXISTING WATER VALVE	PROPOSED ROCK FILTER
EXISTING TREE LINE	TOPSOIL STOCKPILE
BUILDING SETBACK LINE	SEDIMENT BAG DESIGNATED GRASS AREA
EXISTING FIRE HYDRANT	EROSION CONTROL BLANKET
EXISTING UTILITY POLE	
EXISTING SIGN	
EXISTING LIGHT POLE	

SOILS LEGEND:

SYMBOL	SOIL TYPE
UcB	UDORTHENTS, SANDY
UtB	URBAN LAND-MATAPEAKE COMPLEX 0% TO 8% SLOPES

GRAPHIC SCALE

20 0 10 20 40 80

(IN FEET)
1 inch = 20 ft.

CALL BEFORE YOU DIG!

PENNSYLVANIA LAW REQUIRES 3 WORKING DAYS NOTICE FOR CONSTRUCTION PHASE AND 10 WORKING DAYS IN DESIGN STAGE-STOP CALL

PENNSYLVANIA ONE CALL SYSTEM, INC.

SERIAL NUMBER 20170302177

1-800-242-1776

Carroll Engineering Corporation
CORPORATE OFFICE
949 EASTON - ROAD
WARRINGTON, - PA - 18976
PHONE: 215-343-5700
FAX: 215-343-0875

630 Freedom Business Ctr., 3rd Fl. King of Prussia, PA 19406 Phone: 610-489-5100

105 Raider Boulevard, Suite 206 Hillsborough, NJ 08844 Phone: 908-874-7500 Fax: 908-874-5762

101 Lindenwood Drive, Suite 225 Malvern, PA 19355 Phone: 484-875-3075

www.carrollengineering.com

COMMONWEALTH OF PENNSYLVANIA
REGISTERED PROFESSIONAL
JOHN L. KOUTSOUROS
ENGINEER
PE057058

EROSION & SEDIMENTATION CONTROL PLAN

VMC POLE BARN

SITUATED IN
BENSALEM TOWNSHIP, BUCKS COUNTY, PENNSYLVANIA
PREPARED FOR
BENSALEM SCHOOL DISTRICT
3100 DONALLEN DRIVE
BENSALEM, PA 19020

NO.	DATE	DESCRIPTION	INITIALS

DATE	06-04-2019
CADD FILE	1814580007
JOB NO	18-1458
DSG BY	JLK
DWN BY	YPC
CKD BY	JLK
SCALE	1" = 20'
DRAWER NUMBER	-
SHEET	3 OF 4 SHEETS

DRAWING NUMBER
CJ-101

COPYRIGHT © - 2019 CARROLL ENGINEERING CORPORATION - ALL RIGHTS RESERVED

\\pen-file\Workfiles\Active\1814580007\CAD\DRAWING\1814580007.dwg Jun 11, 2019 10:57pm jkoutsouros Ent: 1814580004
1814580002

GRASS SEED MIX (SEE TABLE)

ALL AREAS WHICH ARE UNPAVED AND UNPLANTED SHALL BE CONSIDERED GRASS AREAS AND BE SEEDED WITH SPECIFIED MIXTURE, UNLESS SPECIFIED FOR SOD PLACEMENT.

THE PERMANENT AND TEMPORARY SEEDING REQUIREMENTS BELOW ARE THE MINIMUM TO WHICH THE CONTRACTOR SHALL CONFORM AND ARE IN ADDITION TO ANY ADDITIONAL REQUIREMENTS SET FORTH IN THESE SPECIFICATIONS, THE EROSION AND SEDIMENT CONTROL MANUAL (LATEST VERSION INCLUDING CORRECTIONS), AND PENNDOT PUBLICATION 408, SECTION 804.

PERMANENT SEEDING TABLE:

CONDITION	TOPSOIL (5)	LIME (1)	FERTILIZER (2)	SEED MIX & SOWING RATE (4) (% BY WEIGHT)
ROADSIDE, NON-MOWED	YES	240# PER 1,000 SQ FT	10-20-20	80% KENTUCKY 31 FESCUE 20% PENNLAWN RED FESCUE SOW 21# PER 1,000 SQ. YD. MAR. THRU MAY/AUG THRU SEPT
ROADSIDE MOWED	YES	240# PER 1,000 SQ FT	10-20-20	50% KENTUCKY BLUEGRASS 30% PENNLAWN RED FESCUE 20% PENNFINE PERENNIAL RYEGRASS SOW 21# PER 1,000 SQ YD MAR. THRU MAY/AUG THRU SEPT
BANK AREAS, NON-MOWED	YES	240# PER 1,000 SQ FT	10-20-20	BIRDSFOOT TREFOIL 55% ANNUAL RYEGRASS SOW 9# PER 1,000 SQ YD ANYTIME EXCEPT SEPT THRU OCT
LAWNS	YES	240# PER 1,000 SQ FT	10-20-20	80% TURF TYPE FESCUE (3) 20% PENNFINE PERENNIAL RYEGRASS SOW 52# PER 1,000 SQ YD MAR THRU MAY/AUG THRU SEPT
FIELDS AND PASTURE, NON-CULTIVATED	NO	NO	10-20-20	100% TIMOTHY SOW 9# PER 1,000 SQ YD MAR THRU MAY/AUG THRU SEPT
FIELDS, CULTIVATED	NO	NO	10-20-20	100% ANNUAL RYEGRASS SOW 9# PER 1,000 SQ YD MAR THRU MAY/AUG THRU SEPT
WOODS, SPARSE	NO	NO	10-20-20	100% RED FESCUE SOW 36#/1,000 SQ YD MAR THRU MAY/AUG THRU SEPT
WOODS, DENSE	NO	NO	NO	STABILIZE SOIL WITH BIODEGRADABLE NETTING AND PAPER FABRIC
MATERIAL				

TEMPORARY SEEDING TABLE::

CONDITION	TOPSOIL (5)	LIME (1)	FERTILIZER (2)	SEED MIX & SOWING RATE (4) (% BY WEIGHT)
TEMPORARY COVER MAR THRU JUNE	N/A	40# PER 1,000 SQ FT	10-20-20	35% SPRING OATS 35% ANNUAL RYEGRASS 30% KENTUCKY 31 FESCUE SOW 85# PER ACRE (17# PER 1000 SQ YD)
TEMPORARY COVER MOWED	N/A	40# PER 1,000 SQ FT	10-20-20	15% FYLKING KY BLUEGRASS 40% KENTUCKY 31 FESCUE 45% ANNUAL RYEGRASS SOW 65# PER ACRE (13# PER 1000 SQ YD)
TEMPORARY COVER NON-MOWED	N/A	40# PER 1,000 SQ FT	10-20-20	75% WINTER RYE OR WINTER WHEAT 12% ANNUAL RYEGRASS 10% KENTUCKY 31 FESCUE 3% RED TOP SOW 154# PER ACRE (31# PER 1000 SQ YD) (WINTER WHEAT OR WINTER RYE IN THE MIX = 116 LBS OR 2 BUSHELS)

NOTES:

(1) UNLESS LESSER RATE INDICATED BY SOILS TESTS.

(2) FERTILIZER SHALL BE MIN 50% ORGANIC NITROGEN, APPLY AT A RATE OF 25 POUNDS PER 1000 SQUARE FEET FOR PERMANENT RESTORATION AND 12.5 POUNDS FOR 1000 SQUARE FEET FOR TEMPORARY RESTORATION, UNLESS OTHERWISE RECOMMENDED BY THE SEED MANUFACTURER.

(3) TURF TYPE FESCUE SHALL BE SUPPLIED IN TWO EQUAL PARTS OF DIFFERENT SPECIES.

(4) SOWING RATES IN ACCORDANCE WITH SEEDING TABLE, UNLESS OTHERWISE RECOMMENDED BY SEED MANUFACTURER.

(5) TOPSOIL REQUIRED:

MIN DEPTH – 6"
pH 6 – 8
ORGANIC – 2.5–4.0%
NITRATE NITROGEN – 100 LB. ACRE/MIN
PHOSPHOROUS – 200 LB. ACRE/MIN
POTASSIUM – 200 LB. ACRE/MIN

MULCHING MATERIALS

A. MULCHES FOR TEMPORARY AND PERMANENT SEEDED AREAS SHALL BE ONE, OR A COMBINATION, OF THE FOLLOWING:

1. STRAW:

CURED TO LESS THAN 20% MOISTURE CONTENT BY WEIGHT. EITHER WHEAT OR OAT STRAW, FREE OF WEEDS SHOULD BE PROVIDED CONTAINING NO STEMS OF TOBACCO, SOYBEANS, OR OTHER COARSE OR WOODY MATERIAL.

2. WOOD CELLULOSE (HYDROMULCH):

CONTAINING NO GROWTH OR GERMINATION-INHIBITING SUBSTANCES. GREEN-DYED AND AIR-DRIED. PACKAGES NOT EXCEEDING 100 POUNDS.

MOISTURE CONTENT:	12% ± 3%
ORGANIC MATTER (DRY OVEN BASIS):	98.6% ± 0.2%
ASH CONTENT:	1.4% ± 0.2%
MINIMUM WATER-HOLDING CAPACITY:	1,000%

B. MULCHING SHALL BE PERFORMED IN CONJUNCTION WITH SEEDING AT THE CONCLUSION OF FINISH GRADING OPERATIONS. STRAW SHALL BE PLACED UNIFORMLY IN A CONTINUOUS BLANKET AT A MINIMUM RATE OF THREE TONS PER ACRE (140 POUNDS PER 1000 SQ FT). A MECHANICAL BLOWER MAY BE USED TO APPLY MULCH MATERIAL, PROVIDED THE MACHINE HAS BEEN SPECIFICALLY DESIGNED AND APPROVED FOR THIS PURPOSE. MACHINES WHICH CUT MULCH INTO SHORT PIECES WILL NOT BE PERMITTED.

C. STRAW SHALL BE ANCHORED BY THE USE OF TWINE STAKES, WIRE STAPLES, PAPER OR PLASTIC NETS, EMULSIFIED ASPHALT PROVIDED IT IS APPLIED UNIFORMLY TO THE MULCH AT A RATE OF NOT LESS THAN 31 GALLONS PER 1000 SQUARE YARDS), OR BY OTHER APPROVED METHODS. MULCH OVER TOP SOILED AREAS SHALL BE INCORPORATED INTO THE SOIL BY APPROVED EQUIPMENT.

D. WHEN MULCHING BY THE ASPHALT MIX METHOD, APPLY THE MULCH BY BLOWING. SPRAY THE ASPHALT BINDER MATERIAL INTO THE MULCH AS IT LEAVES THE BLOWER. APPLY THE BINDER TO THE MULCH IN THE PROPORTION OF 1.5 TO 2.0 GALLONS PER 45 POUNDS OF MULCH. PROTECT STRUCTURES, PAVEMENTS, CURBS, AND WALLS TO PREVENT ASPHALT STAINING. ERECT WARNING SIGNS AND BARRICADES AT INTERVALS OF 50 FEET OR LESS ALONG THE PERIMETER OF THE MULCHED AREA. DO NOT SPRAY ASPHALT AND CHEMICAL MULCH BINDERS ONTO ANY AREA WITHIN 100 FEET OF A STREAM OR OTHER BODY OF WATER.

E. APPLY WOOD CELLULOSE FIBER HYDRAULICALLY AT A RATE OF 47 POUNDS PER 1000 SQUARE FEET. INCORPORATE AS AN INTEGRAL PART OF THE HYDROSEED SLURRY AFTER SEED AND SOIL SUPPLEMENTS HAVE BEEN THOROUGHLY MIXED.

F. POLYMERIC TACKIFIER SHOULD BE USED WITH MULCH ON SLOPES GREATER THAN 5%.

G. MULCH ON SLOPES OF 8% OR STEEPER SHOULD BE HELD IN PLACE WITH NETTING. NETTING SHOULD BE STAPLED OVER MULCH IN ACCORDANCE WITH MANUFACTURER RECOMMENDATIONS.

H. THOROUGHLY WATER MULCH AND SEED BED IMMEDIATELY AFTER COMPLETION OF MULCHING. SOIL SHALL BE MOISTENED TO A DEPTH OF NOT LESS THAN 4".

SOIL RESOLUTIONS:

TOPSOIL SHALL BE FERTILIZED PRIOR TO SEEDING.

ACIDIC SOILS – TOPSOIL SHALL BE TESTED FOR PH AND LIMED TO OBTAINED A PH OF 7.0 TO 7.5.

WET SOILS – TRENCHES SHALL BE PUMPED TO KEEP THEM DRY. PUMPED WATER SHALL BE FILTERED THROUGH A SEDIMENT FILTER BAG.

WINTER GRADING – WINTER GRADING SHALL BE DONE IN A CAREFUL MANNER. EXTRA STABILIZATION METHODS MAY BE NEEDED TO STABILIZE DISTURBED EARTH UNTIL THE GROWING SEASON.

STANDARD E&S PLAN NOTES:

1. ALL EARTH DISTURBANCES, INCLUDING CLEARING AND GRUBBING AS WELL AS CUTS AND FILLS SHALL BE DONE IN ACCORDANCE WITH THE APPROVED E&S PLAN. A COPY OF THE APPROVED DRAWINGS (STAMPED, SIGNED AND DATED BY THE REVIEWING AGENCY) MUST BE AVAILABLE AT THE PROJECT SITE AT ALL TIMES. THE REVIEWING AGENCY SHALL BE NOTIFIED OF ANY CHANGES TO THE APPROVED PLAN PRIOR TO IMPLEMENTATION OF THOSE CHANGES. THE REVIEWING AGENCY MAY REQUIRE A WRITTEN SUBMITTAL OF THOSE CHANGES FOR REVIEW AND APPROVAL AT ITS DISCRETION.
2. AT LEAST 7 DAYS PRIOR TO STARTING ANY EARTH DISTURBANCE ACTIVITIES, INCLUDING CLEARING AND GRUBBING, THE OWNER AND/OR OPERATOR SHALL INVITE ALL CONTRACTORS, THE LANDOWNER, APPROPRIATE MUNICIPAL OFFICIALS, THE E&S PLAN PREPARER, THE PCSM PLAN PREPARER, THE LICENSED PROFESSIONAL RESPONSIBLE FOR OVERSIGHT OF CRITICAL STAGES OF IMPLEMENTATION OF THE PCSM PLAN, AND A REPRESENTATIVE FROM THE LOCAL CONSERVATION DISTRICT TO AN ON-SITE PRECONSTRUCTION MEETING.
3. AT LEAST 3 DAYS PRIOR TO STARTING ANY EARTH DISTURBANCE ACTIVITIES, OR EXPANDING INTO AN AREA PREVIOUSLY UNMARKED, THE PENNSYLVANIA ONE CALL SYSTEM INC. SHALL BE NOTIFIED AT 1-800-242-1776 FOR THE LOCATION OF EXISTING UNDERGROUND UTILITIES.
4. ALL EARTH DISTURBANCE ACTIVITIES SHALL PROCEED IN ACCORDANCE WITH THE SEQUENCE PROVIDED ON THE PLAN DRAWINGS. DEVIATION FROM THAT SEQUENCE MUST BE APPROVED IN WRITING FROM THE LOCAL CONSERVATION DISTRICT OR BY THE DEPARTMENT PRIOR TO IMPLEMENTATION.
5. AREAS TO BE FILLED ARE TO BE CLEARED, GRUBBED, AND STRIPPED OF TOPSOIL TO REMOVE TREES, VEGETATION, ROOTS AND OTHER OBJECTIONABLE MATERIAL.
6. CLEARING, GRUBBING, AND TOPSOIL STRIPPING SHALL BE LIMITED TO THOSE AREAS DESCRIBED IN EACH STAGE OF THE CONSTRUCTION SEQUENCE. GENERAL SITE CLEARING, GRUBBING AND TOPSOIL STRIPPING MAY NOT COMMENCE IN ANY STAGE OR PHASE OF THE PROJECT UNTIL THE E&S BMPS SPECIFIED BY THE BMP SEQUENCE FOR THAT STAGE OR PHASE HAVE BEEN INSTALLED AND ARE FUNCTIONING AS DESCRIBED IN THIS E&S PLAN.
7. AT NO TIME SHALL CONSTRUCTION VEHICLES BE ALLOWED TO ENTER AREAS OUTSIDE THE LIMIT OF DISTURBANCE BOUNDARIES SHOWN ON THE PLAN MAPS. THESE AREAS MUST BE CLEARLY MARKED AND FENCED OFF BEFORE CLEARING AND GRUBBING OPERATIONS BEGIN.
8. TOPSOIL REQUIRED FOR THE ESTABLISHMENT OF VEGETATION SHALL BE STOCKPILED AT THE LOCATION(S) SHOWN ON THE PLAN MAPS(S) IN THE AMOUNT NECESSARY TO COMPLETE THE FINISH GRADING OF ALL EXPOSED AREAS THAT ARE TO BE STABILIZED BY VEGETATION. EACH STOCKPILE SHALL BE PROTECTED IN THE MANNER SHOWN ON THE PLAN DRAWINGS. STOCKPILE HEIGHTS SHALL NOT EXCEED 35 FEET. STOCKPILE SLOPES SHALL BE 2H:1V OR FLATTER.
9. IMMEDIATELY UPON DISCOVERING UNFORESEEN CIRCUMSTANCES POSING THE POTENTIAL FOR ACCELERATED EROSION AND/OR SEDIMENT POLLUTION, THE OPERATOR SHALL IMPLEMENT APPROPRIATE BEST MANAGEMENT PRACTICES TO MINIMIZE THE POTENTIAL FOR EROSION AND SEDIMENT POLLUTION AND NOTIFY THE LOCAL CONSERVATION DISTRICT AND/OR THE REGIONAL OFFICE OF THE DEPARTMENT.
10. ALL OFF-SITE WASTE AND BORROW AREAS MUST HAVE AN E&S PLAN APPROVED BY THE LOCAL CONSERVATION DISTRICT OR THE DEPARTMENT FULLY IMPLEMENTED PRIOR TO BEING ACTIVATED.
11. THE CONTRACTOR IS RESPONSIBLE FOR ENSURING THAT ANY MATERIAL BROUGHT ON SITE IS CLEAN FILL. FORM FP-001 MUST BE RETAINED BY THE PROPERTY OWNER FOR ANY FILL MATERIAL AFFECTED BY A SPILL OR RELEASE OF A REGULATED SUBSTANCE BUT QUALIFYING AS CLEAN FILL DUE TO ANALYTICAL TESTING.
12. ALL PUMPING OF WATER FROM ANY WORK AREA SHALL BE DONE ACCORDING TO THE PROCEDURE DESCRIBED IN THIS PLAN, OVER UNDISTURBED VEGETATED AREAS.
13. VEHICLES AND EQUIPMENT MAY NEITHER ENTER DIRECTLY NOR EXIT DIRECTLY FROM THE RIGHT-OF-WAY AND/OR AT AREAS DESIGNATED ON THE PLANS FOR A TEMPORARY CONSTRUCTION ENTRANCE.
14. UNTIL THE SITE IS STABILIZED, ALL EROSION AND SEDIMENT BMPS SHALL BE MAINTAINED PROPERLY. MAINTENANCE SHALL INCLUDE INSPECTIONS OF ALL EROSION AND SEDIMENT BMPS AFTER EACH RUNOFF EVENT AND ON A WEEKLY BASIS. ALL PREVENTATIVE AND REMEDIAL MAINTENANCE WORK, INCLUDING CLEAN OUT, REPAIR, REPLACEMENT, REGRADING, RESEEDING, REMULCHING AND RENETTING MUST BE PERFORMED IMMEDIATELY. IF THE E&S BMPS FAIL TO PERFORM AS EXPECTED, REPLACEMENT BMPS, OR MODIFICATIONS OF THOSE INSTALLED WILL BE REQUIRED.
15. A LOG SHOWING DATES THAT E&S BMPS WERE INSPECTED AS WELL AS ANY DEFICIENCIES FOUND AND THE DATE THEY WERE CORRECTED SHALL BE MAINTAINED ON THE SITE AND BE MADE AVAILABLE TO REGULATORY AGENCY OFFICIALS AT THE TIME OF INSPECTION.
16. SEDIMENT TRACKED ONTO ANY PUBLIC ROADWAY OR SIDEWALK SHALL BE RETURNED TO THE CONSTRUCTION SITE BY THE END OF EACH WORK DAY AND DISPOSED IN THE MANNER DESCRIBED IN THIS PLAN. IN NO CASE SHALL THE SEDIMENT BE WASHED, SHOVELED, OR SWEPT INTO ANY ROADSIDE DITCH, STORM SEWER, OR SURFACE WATER.
17. ALL SEDIMENT REMOVED FROM BMPS SHALL BE DISPOSED OF IN THE MANNER DESCRIBED ON THE PLAN DRAWINGS.
18. AREAS WHICH ARE TO BE TOPSOILED SHALL BE SCARIFIED TO A MINIMUM DEPTH OF 3 TO 5 INCHES – 6 TO 12 INCHES ON COMPACTED SOILS – PRIOR TO PLACEMENT OF TOPSOIL. AREAS TO BE VEGETATED SHALL HAVE A MINIMUM 4 INCHES OF TOPSOIL IN PLACE PRIOR TO SEEDING AND MULCHING. FILL OUTSLOPES SHALL HAVE A MINIMUM OF 2 INCHES OF TOPSOIL.
19. ALL FILLS SHALL BE COMPACTED AS REQUIRED TO REDUCE EROSION, SLIPPAGE, SETTLEMENT, SUBSIDENCE OR OTHER RELATED PROBLEMS. FILL INTENDED TO SUPPORT BUILDINGS, STRUCTURES AND CONDUITS, ETC. SHALL BE COMPACTED IN ACCORDANCE WITH LOCAL REQUIREMENTS OR CODES.
20. ALL EARTHEN FILLS SHALL BE PLACED IN COMPACTED LAYERS NOT TO EXCEED 9 INCHES IN THICKNESS.
21. FILL MATERIALS SHALL BE FREE OF FROZEN PARTICLES, BRUSH, ROOTS, SOD, OR OTHER FOREIGN OR OBJECTIONABLE MATERIALS THAT WOULD INTERFERE WITH OR PREVENT CONSTRUCTION OF SATISFACTORY FILLS.
22. FROZEN MATERIALS OR SOFT, MUCKY, OR HIGHLY COMPRESSIBLE MATERIALS SHALL NOT BE INCORPORATED INTO FILLS.
23. FILL SHALL NOT BE PLACED ON SATURATED OR FROZEN SURFACES.
24. SEEPS OR SPRINGS ENCOUNTERED DURING CONSTRUCTION SHALL BE HANDLED IN ACCORDANCE WITH THE STANDARD AND SPECIFICATION FOR SUBSURFACE DRAIN OR OTHER APPROVED METHOD.
25. ALL GRADED AREAS SHALL BE PERMANENTLY STABILIZED IMMEDIATELY UPON REACHING FINISHED GRADE. CUT SLOPES IN COMPETENT BEDROCK AND ROCK FILLS NEED NOT BE VEGETATED. SEEDED AREAS WITHIN 50 FEET OF A SURFACE WATER, OR AS OTHERWISE SHOWN ON THE PLAN DRAWINGS, SHALL BE BLANKETED ACCORDING TO THE STANDARDS OF THIS PLAN.
26. IMMEDIATELY AFTER EARTH DISTURBANCE ACTIVITIES CEASE IN ANY AREA OR SUBAREA OF THE PROJECT, THE OPERATOR SHALL STABILIZE ALL DISTURBED AREAS. DURING NON-GERMINATING MONTHS, MULCH OR PROTECTIVE BLANKETING SHALL BE APPLIED AS DESCRIBED IN THE PLAN. AREAS NOT AT FINISHED GRADE, WHICH WILL BE REACTIVATED WITHIN 1 YEAR, MAY BE STABILIZED IN ACCORDANCE WITH THE TEMPORARY STABILIZATION SPECIFICATIONS. THOSE AREAS WHICH WILL NOT BE REACTIVATED WITHIN 1 YEAR SHALL BE STABILIZED IN ACCORDANCE WITH THE PERMANENT STABILIZATION SPECIFICATIONS.
27. PERMANENT STABILIZATION IS DEFINED AS A MINIMUM UNIFORM, PERENNIAL 70% VEGETATIVE COVER OR OTHER PERMANENT NON-VEGETATIVE COVER WITH A DENSITY SUFFICIENT TO RESIST ACCELERATED EROSION. CUT AND FILL SLOPES SHALL BE CAPABLE OF RESISTING FAILURE DUE TO SLUMPING, SLIDING, OR OTHER MOVEMENTS.
28. E&S BMPS SHALL REMAIN FUNCTIONAL AS SUCH UNTIL ALL AREAS TRIBUTARY TO THEM ARE PERMANENTLY STABILIZED OR UNTIL THEY ARE REPLACED BY ANOTHER BMP APPROVED BY THE LOCAL CONSERVATION DISTRICT OR THE DEPARTMENT.
29. UPON COMPLETION OF ALL EARTH DISTURBANCE ACTIVITIES AND PERMANENT STABILIZATION OF ALL DISTURBED AREAS, THE OWNER AND/OR OPERATOR SHALL CONTACT THE LOCAL CONSERVATION DISTRICT FOR AN INSPECTION PRIOR TO REMOVAL/CONVERSION OF THE E&S BMPS.
30. AFTER FINAL SITE STABILIZATION HAS BEEN ACHIEVED, TEMPORARY EROSION AND SEDIMENT BMPS MUST BE REMOVED OR CONVERTED TO PERMANENT POST CONSTRUCTION STORMWATER MANAGEMENT BMPS. AREAS DISTURBED DURING REMOVAL OR CONVERSION OF THE BMPS SHALL BE STABILIZED IMMEDIATELY. IN ORDER TO ENSURE RAPID REVEGETATION OF DISTURBED AREAS, SUCH REMOVAL/CONVERSIONS ARE TO BE DONE ONLY DURING THE GERMINATING SEASON.
31. UPON COMPLETION OF ALL EARTH DISTURBANCE ACTIVITIES AND PERMANENT STABILIZATION OF ALL DISTURBED AREAS, THE OWNER AND/OR OPERATOR SHALL CONTACT THE LOCAL CONSERVATION DISTRICT TO SCHEDULE A FINAL INSPECTION.
32. FAILURE TO CORRECTLY INSTALL E&S BMPS, FAILURE TO PREVENT SEDIMENT-LADEN RUNOFF FROM LEAVING THE CONSTRUCTION SITE, OR FAILURE TO TAKE IMMEDIATE CORRECTIVE ACTION TO RESOLVE FAILURE OF E&S BMPS MAY RESULT IN ADMINISTRATIVE, CIVIL, AND/OR CRIMINAL PENALTIES BEING INSTITUTED BY THE DEPARTMENT AS DEFINED IN SECTION 602 OF THE PENNSYLVANIA CLEAN STREAMS LAW. THE CLEAN STREAMS LAW PROVIDES FOR UP TO $10,000 PER DAY IN CIVIL PENALTIES, UP TO $10,000 IN SUMMARY CRIMINAL PENALTIES, AND UP TO $25,000 IN MISDEMEANOR CRIMINAL PENALTIES FOR EACH VIOLATION.

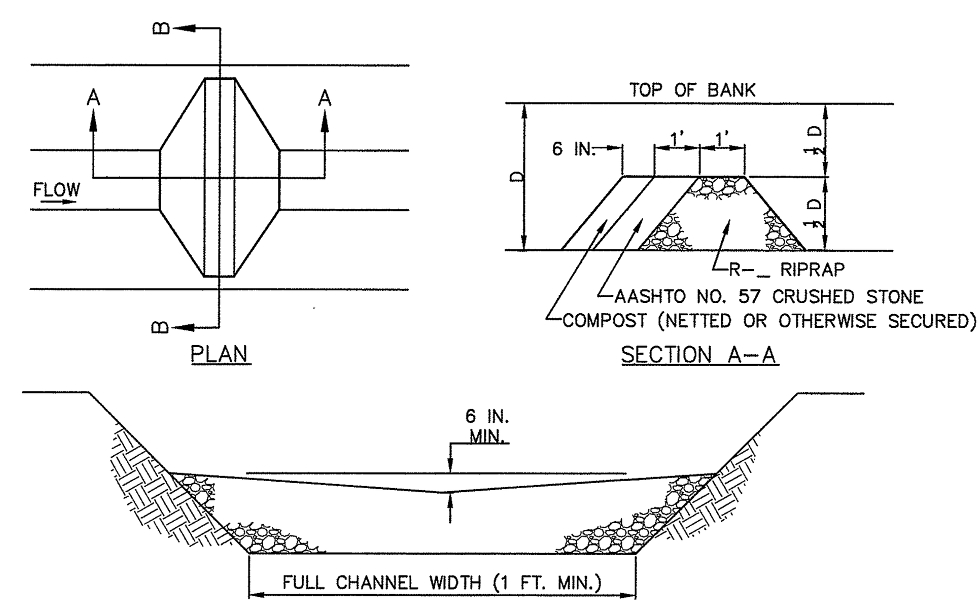

SECTION B-B

ROCK FILTER NO.	LOCATION	D (FT)	RIPRAP SIZE (R-_)
1	SHEET #3	3	4

FOR D ≥ 3 FT. – USE R-4
FOR D ≥ 2 FT. TO D < 3 FT. – USE R-3
NOT APPLICABLE FOR D < 2 FT.

NOTES:

1. SEDIMENT MUST BE REMOVED WHEN ACCUMULATIONS REACH 1/2 THE HEIGHT OF THE FILTERS.
2. IMMEDIATELY UPON STABILIZATION OF EACH CHANNEL, REMOVE ACCUMULATED SEDIMENT, REMOVE ROCK FILTER, AND STABILIZE DISTURBED AREAS.

ROCK FILTERS

NTS

STANDARD DETAIL 4-14

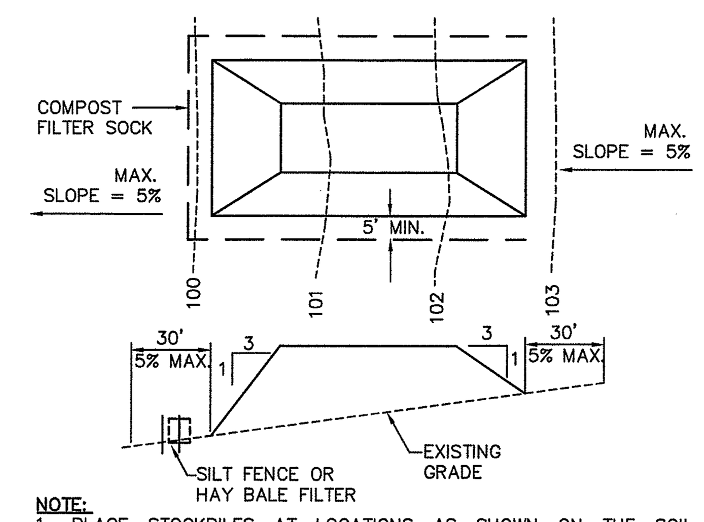

NOTE:
1. PLACE STOCKPILES AT LOCATIONS AS SHOWN ON THE SOIL EROSION AND SEDIMENT CONTROL PLAN.
2. ALL SIDE SLOPES SHALL BE 3 TO 1 OR FLATTER.
3. STOCKPILE SHALL RECEIVE A VEGETATIVE COVER IN ACCORDANCE WITH MINIMUM STABILIZATION REQUIRED.
4. SILT FENCE OR HAY BALE FILTER SHALL BE INSTALLED AS DETAILED HEREON.

TOPSOIL STOCKPILE

NTS

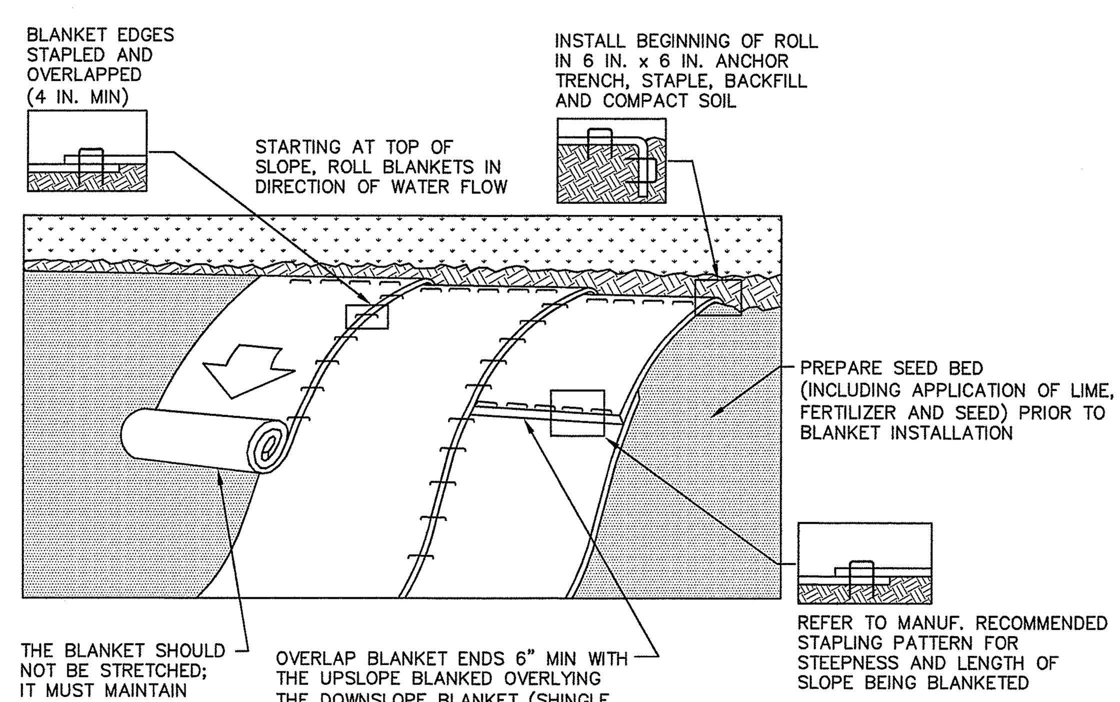

NOTES:

1. SEED AND SOIL AMENDMENTS SHALL BE APPLIED ACCORDING TO THE RATES IN THE PLAN DRAWINGS PRIOR TO INSTALLING THE BLANKET.
2. PROVIDE ANCHOR TRENCH AT TOE OF SLOPE IN SIMILAR FASHION AS AT TOP OF SLOPE.
3. SLOPE SURFACE SHALL BE FREE OF ROCKS, CLODS, STICKS, AND GRASS.
4. BLANKET SHALL HAVE GOOD CONTINUOUS CONTACT WITH UNDERLYING SOIL THROUGHOUT ENTIRE LENGTH. LAY BLANKET LOOSELY AND STAKE OR STAPLE TO MAINTAIN DIRECT CONTACT WITH SOIL. DO NOT STRETCH BLANKET.
5. THE BLANKET SHALL BE STAPLED IN ACCORDANCE WITH THE MANUFACTURER'S RECOMMENDATIONS.
6. BLANKETED AREAS SHALL BE INSPECTED WEEKLY AND AFTER EACH RUNOFF EVENT UNTIL PERENNIAL VEGETATION IS ESTABLISHED TO A MINIMUM UNIFORM 70% COVERAGE THROUGHOUT THE BLANKETED AREA. DAMAGED OR DISPLACED BLANKETS SHALL BE RESTORED OR REPLACED WITHIN 4 CALENDAR DAYS.

EROSION CONTROL BLANKET INSTALLATION

NTS

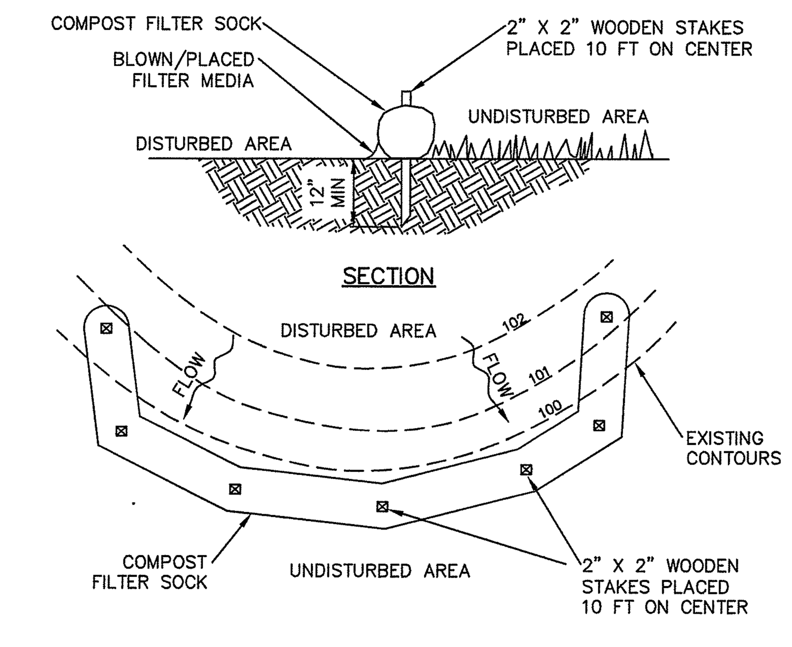

PLAN VIEW

NOTES:

1. SOCK FABRIC SHALL MEET STANDARDS OF TABLE 4.1 OF THE PA DEP EROSION CONTROL MANUAL. COMPOST SHALL MEET THE STANDARDS OF TABLE 4.2 OF THE PA DEP EROSION CONTROL MANUAL.
2. COMPOST FILTER SOCK SHALL BE PLACED AT EXISTING LEVEL GRADE. BOTH ENDS OF THE BARRIER SHALL BE EXTENDED AT LEAST 8 FEET UP SLOPE AT 45 DEGREES TO THE MAIN BARRIER ALIGNMENT. MAXIMUM SLOPE LENGTH ABOVE ANY BARRIER SHALL NOT EXCEED THAT SPECIFIED FOR THE SIZE OF THE SOCK AND THE SLOPE OF ITS TRIBUTARY AREA.
3. TRAFFIC SHALL NOT BE PERMITTED TO CROSS COMPOST FILTER SOCKS.
4. ACCUMULATED SEDIMENT SHALL BE REMOVED WHEN IT REACHES 1/2 THE ABOVE GROUND HEIGHT OF THE BARRIER AND DISPOSED IN THE MANNER DESCRIBED ELSEWHERE IN THE PLAN.
5. COMPOST FILTER SOCKS SHALL BE INSPECTED WEEKLY AND AFTER EACH RUNOFF EVENT. DAMAGED SOCKS SHALL BE REPAIRED ACCORDING TO MANUFACTURER'S SPECIFICATIONS OR REPLACED WITHIN 24 HOURS OF INSPECTION.
6. BIODEGRADABLE COMPOST FILTER SOCKS SHALL BE REPLACED AFTER 6 MONTHS; PHOTODEGRADABLE SOCKS AFTER 1 YEAR. POLYPROPYLENE SOCKS SHALL BE REPLACED ACCORDING TO MANUFACTURER'S RECOMMENDATIONS.
7. UPON STABILIZATION OF THE AREA TRIBUTARY TO THE SOCK, STAKES SHALL BE REMOVED. THE SOCK MAY BE LEFT IN PLACE AND VEGETATED OR REMOVED. IN THE LATTER CASE, THE MESH SHALL BE CUT OPEN AND THE MULCH SPREAD AS A SOIL SUPPLEMENT.

COMPOST FILTER SOCK

NTS

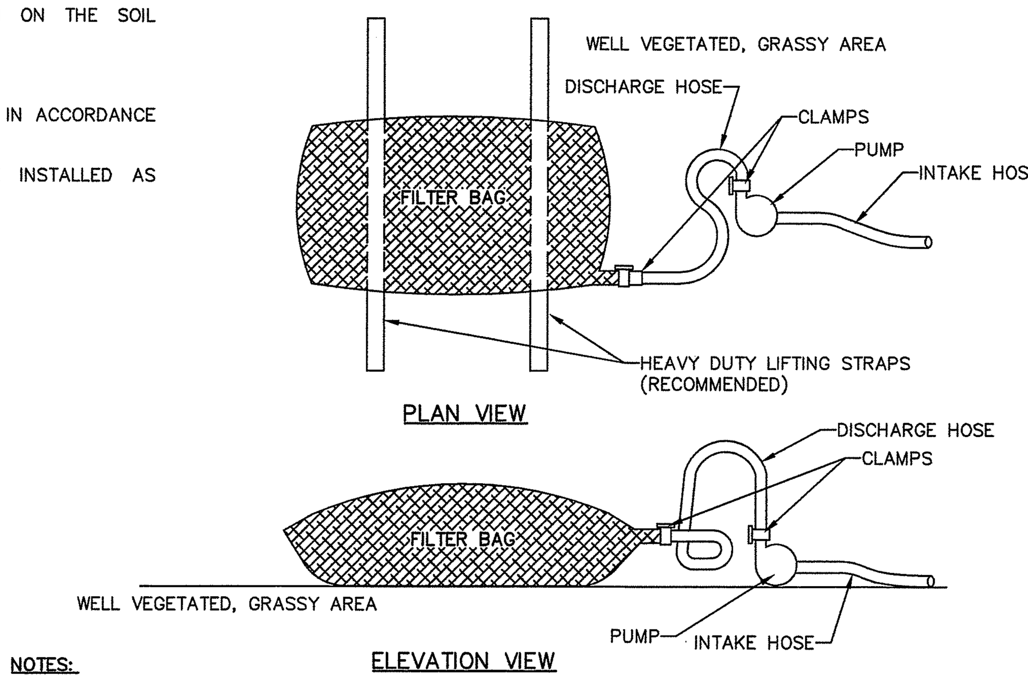

ELEVATION VIEW

NOTES:

1. LOW VOLUME FILTER BAGS SHALL BE MADE FROM NON-WOVEN GEOTEXTILE MATERIAL SEWN WITH HIGH STRENGTH, DOUBLE STITCHED "J" TYPE SEAMS. THEY SHALL BE CAPABLE OF TRAPPING PARTICLES LARGER THAN 150 MICRONS. HIGH VOLUME FILTER BAGS SHALL BE MADE FROM WOVEN GEOTEXTILES THAT MEET THE FOLLOWING STANDARDS:

PROPERTY	TEST METHOD	MINIMUM STANDARD
AVG. WIDE WIDTH STRENGTH	ASTM D-4884	60 LB/IN
GRAB TENSILE	ASTM D-4632	205 LB
PUNCTURE	ASTM D-4833	110 LB
MULLEN BURST	ASTM D-3786	350 PSI
UV RESISTANCE	ASTM D-4355	70%
AOS % RETAINED	ASTM D-4751	80 SIEVE

2. A SUITABLE MEANS OF ACCESSING THE BAG WITH MACHINERY REQUIRED FOR DISPOSAL PURPOSES SHALL BE PROVIDED. FILTER BAGS SHALL BE REPLACED WHEN THEY BECOME 1/2 FULL OF SEDIMENT. SPARE BAGS SHALL BE KEPT AVAILABLE FOR REPLACEMENT OF THOSE THAT HAVE FAILED OR ARE FILLED. BAGS SHALL BE PLACED ON STRAPS TO FACILITATE REMOVAL UNLESS BAGS COME WITH LIFTING STRAPS ALREADY ATTACHED.
3. BAGS SHALL BE LOCATED IN WELL-VEGETATED (GRASSY) AREA, AND DISCHARGE ONTO STABLE, EROSION RESISTANT AREAS. WHERE THIS IS NOT POSSIBLE, A GEOTEXTILE UNDERLAYMENT AND FLOW PATH SHALL BE PROVIDED. BAGS MAY BE PLACED ON FILTER STONE TO INCREASE DISCHARGE CAPACITY. BAGS SHALL NOT BE PLACED ON SLOPES GREATER THAN 5%. FOR SLOPES EXCEEDING 5%, CLEAN ROCK OR OTHER NON-ERODIBLE AND NON-POLLUTING MATERIAL MAY BE PLACED UNDER THE BAG TO REDUCE SLOPE STEEPNESS.
4. NO DOWNSLOPE SEDIMENT BARRIER IS REQUIRED FOR MOST INSTALLATIONS. COMPOST BERM OR COMPOST FILTER SOCK SHALL BE INSTALLED BELOW BAGS LOCATED IN HQ OR EV WATERSHEDS, WITHIN 50 FEET OF ANY RECEIVING SURFACE WATER OR WHERE GRASSY AREA IS NOT AVAILABLE.
5. THE PUMP DISCHARGE HOSE SHALL BE INSERTED INTO THE BAGS IN THE MANNER SPECIFIED BY THE MANUFACTURER AND SECURELY CLAMPED. A PIECE OF PVC PIPE IS RECOMMENDED FOR THIS PURPOSE.
6. THE PUMPING RATE SHALL BE NO GREATER THAN 750 GPM OR 1/2 THE MAXIMUM SPECIFIED BY THE MANUFACTURER, WHICHEVER IS LESS. PUMP INTAKES SHALL BE FLOATING AND SCREENED.
7. FILTER BAGS SHALL BE INSPECTED DAILY. IF ANY PROBLEM IS DETECTED, PUMPING SHALL CEASE IMMEDIATELY AND NOT RESUME UNTIL THE PROBLEM IS CORRECTED.

PUMPED WATER FILTER BAG

NTS

Carroll Engineering Corporation
CORPORATE OFFICE
949 – EASTON – ROAD
WARRINGTON, – PA – 18976
PHONE: 215–343–5700
FAX: 215–343–0875
630 Freedom Business Ctr., 3rd Fl. King of Prussia, PA 19406 Phone: 610-489-5100
105 Raider Boulevard, Suite 206 Hillsborough, NJ 08844 Phone: 908-874-7500 Fax: 908-874-5762
101 Lindenwood Drive, Suite 225 Malvern, PA 19355 Phone: 484-875-3075
www.carrollengineering.com

COMMONWEALTH OF PENNSYLVANIA REGISTERED PROFESSIONAL JOHN L. KOUTSOUROS ENGINEER

EROSION & SEDIMENTATION CONTROL NOTES AND DETAILS

VMC POLE BARN
SITUATED IN
BENSALEM TOWNSHIP, BUCKS COUNTY, PENNSYLVANIA
PREPARED FOR
BENSALEM SCHOOL DISTRICT
3100 DONALLEN DRIVE
BENSALEM, PA 19020

NO.	DATE	DESCRIPTION	INITIALS

DATE	06-04-2019
CADD FILE	1814580007
JOB NO	18-1458
DSG BY	JLK
DWN BY	YPC
CKD BY	JLK
SCALE	AS SHOWN
DRAWER NUMBER	–
SHEET 4 OF 4 SHEETS	

DRAWING NUMBER
CJ-501

\\cec-file\NewformaDataStore\181458.00\CAD\DRAWING\1814580007.dwg Jun 11, 2019 11:00am jkoutsouros Eref: 1814580004 1814580005 1814580002

COPYRIGHT © – 2019 CARROLL ENGINEERING CORPORATION – ALL RIGHTS RESERVED

STORMWATER MANAGEMENT REPORT

VMC POLE BARN

JUNE 2019

PREPARED FOR:

BENSALEM TOWNSHIP SCHOOL DISTRICT
3000 DONALLEN DRIVE
BENSALEM, PA 19020

PREPARED BY:

CARROLL ENGINEERING CORPORATION
949 EASTON ROAD
WARRINGTON, PA 18976

Copyright©-2018 Carroll Engineering Corporation - All Rights Reserved - These documents were prepared by, and are owned by, Carroll Engineering Corporation; and as such, represent instruments of professional service with respect to the project for which they were specifically designed and to the listed client and/or applicant. The documents and information are not intended or represented to be suitable for reuse by the listed client/applicant, or by others, on extensions or modification of the project or any other project. The reproduction of a copy of these plans, or reuse of these documents, and/or the copying of any portion of information shown on these plans is not permitted and in no circumstance will be approved without an assignment of copyright privileges. Violation of this restriction shall be considered a violation of the Professional Code of Ethics and a theft of corporate assets, both of which shall be prosecuted to the fullest extent of current statutes. In the event of any unauthorized use, the person initiating the use shall accept all responsibility, both for copyright violation and professional liability, for any claims, damages, losses, and expenses arising from the unauthorized reproduction, misuse, or misappropriation of these documents or information shown on said documents.

TABLE OF CONTENTS

I. PROJECT NARRATIVE 1

II. U.S.G.S. LOCATION MAP, SOILS MAP AND SOILS INFORMATION 3

III. STORMWATER MANAGEMENT 6

- NOAA PRECIPITATION DATA (DEPTH) 8
- RAINFALL REPORT 12
- INFILTRATION RATE TABLE 13
- TABLE B-7 RATIONAL RUNOFF COEFFICIENTS 14
- VOLUME & PEAK RATE CONTROL 16
- HYDRAFLOW SUMMARY REPORT 17
- DEWATERING TIME 18
- PIPE SIZING 19

APPENDIX

- PENN'S TRAIL STORMWATER PERCOLCATION REPORT DATED 01/21/2019
- NESHAMINY CREEK WATERSHED MAP

I. PROJECT NARRATIVE

PROJECT DESCRIPTION

The applicant proposes to construct a 20,490 square foot pervious parking lot, 1,800 square foot unenclosed canopy parking, and a 12,325 square foot pole barn. The project will take place on T.M.P. 02-033-106 in Bensalem Township on the southern side of intersection with Byberry Road and Casey Lane. The lot currently houses an existing bus transportation center with maintenance building and bus parking lot. This project's location is currently an undeveloped woodland.

The approximate earth disturbance of this project is 0.96 acres. No wetland areas or riparian buffers are proposed to be impacted.

All drainage is ultimately tributary to the Neshaminy Creek in the east side of site. The aforementioned improvements will result in an increase in impervious surface of 16,174 square feet. The proposed pervious parking lot will provide storage for stormwater runoff in accordance with the Neshaminy Creek Watershed Act 167 Stormwater Management Ordinance.

STORMWATER NARRATIVE

Pursuant to the requirements of the Bensalem Township Stormwater Management Ordinance 2012, the proposed improvements and corresponding stormwater facility are designed to the Volume Control & Peak Rate Runoff requirements.

Stormwater rate and volume control will be accomplished solely through the use of "Pervious Pavement with Infiltration Bed". The pervious pavement bed will consist of a pervious surface course underlain by a stone bed of uniformly graded and clean-washed coarse aggregate with a void space of at least 40%. Stormwater drains through the surface, which is temporarily held in the voids of the stone bed, and then slowly drains into the underlying, uncompacted soil mantle. A layer of geotextile filter fabric separates the aggregate from the underlying soil, preventing the migration of fines into the bed. The bed bottoms will be level and uncompacted.

II. USGS LOCATION MAP & SOILS MAP

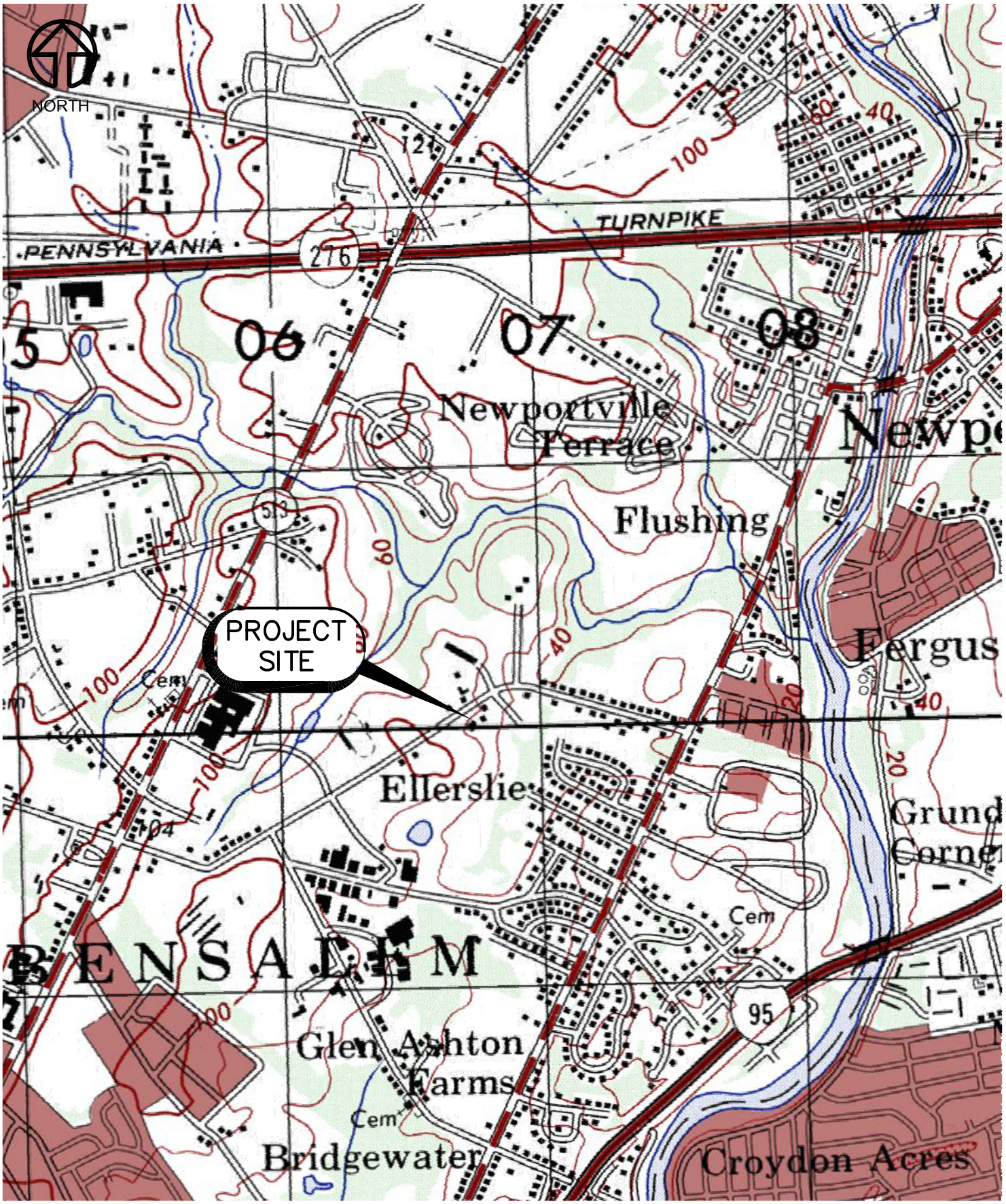

Carroll Engineering Corporation

www.carrollengineering.com

USGS LOCATION MAP

PREPARED FOR
BENSALEM TOWNSHIP SCHOOL DISTRICT
SITUATED IN
BENSALEM TOWNSHIP
BUCKS COUNTY, PENNSYLVANIA

DATE 12-21-2018
JOB NO. 181458007
SCALE 1" = 500'
DWG. NO. 18-1458

COPYRIGHT © – 2019 CARROLL ENGINEERING CORPORATION – ALL RIGHTS RESERVED

Map Scale: 1:3,570 if printed on A portrait (8.5" x 11") sheet.

N

0 50 100 200 300 Meters

0 150 300 600 900 Feet

Map projection: Web Mercator Corner coordinates: WGS84 Edge tics: UTM Zone 18N WGS84

III. STORMWATER MANAGEMENT COMPUTATIONS

§196-34 - VOLUME CONTROL

The Rational Method is used as the design standard for satisfying the volume control requirement. The "Pervious Pavement with Infiltration Bed" was designed to accommodate the 100-year runoff volume using HydraFlow Hydrograph's Extension for Autodesk Civil 3D 2019 Version 12.

Please see the attached "Volume & Peak Rate Control" calculation & HydraFlow Summary Report.

§196-35 – STORMWATER PEAK RATE CONTROL AND MANAGEMENT DISTRICT

The Rational Method is used as the design standard for satisfying the peak rate control requirement. The "Pervious Pavement with Infiltration Bed" was designed to accommodate the 100-year peak rate runoff using HydraFlow Hydrograph's Extension for Autodesk Civil 3D 2019 Version 12.

In the most conservation of design storms (100-yr), the "Pervious Pavement with Infiltration Bed" has been designed to exceed required minimum design parameters and pre-to-post storm reductions.

Please see the attached "Volume & Peak Rate Control" calculation.

Table 304.1
Peak Rate Runoff Control Standards by Stormwater Management Districts In The Neshaminy Creek and Poquessing Creek Watersheds (includes Little Neshaminy Creek)

District	Design Storm Post-development (Proposed Conditions)	Design Storm Pre-development (Existing Conditions)
C	2-year	2-year
	5-year	5-year
	10-year	10-year
	25-year	25-year
	50-year	50-year
	100-year	100-year

Please see the attached "Watershed Map".

§196-36 – CALCULATION METHODOLGY

Rainfall frequency for this site are based on the NOAA Atlas 14, Volume 2, Version 3 Bensalem.
Please see the attached "NOAA Precipitation Data" & "Rainfall Data".

The existing soils present at the project site have been identified by the United States Department of Agriculture Natural Resource Conservation Service's Web Soil Survey:

UsB (Urban land-Lawrenceville complex, 0-8% slopes)
UcB (Udorthents, sandy)
UtB (Urban land-Matapeake complex, 0-8% slopes)

Please see the attached "Soil Map" and "Table B-7 Rational Runoff Coefficients".

NOAA Atlas 14, Volume 2, Version 3
Location name: Bensalem, Pennsylvania, USA*
Latitude: 40.1127°, Longitude: -74.9213°
Elevation: 88.54 ft**
* source: ESRI Maps
** source: USGS

POINT PRECIPITATION FREQUENCY ESTIMATES

G.M. Bonnin, D. Martin, B. Lin, T. Parzybok, M.Yekta, and D. Riley

NOAA, National Weather Service, Silver Spring, Maryland

PF_tabular | PF_graphical | Maps_&_aerials

PF tabular

PDS-based point precipitation frequency estimates with 90% confidence intervals (in inches)[1]

Duration	Average recurrence interval (years)									
	1	2	5	10	25	50	100	200	500	1000
5-min	0.347 (0.316-0.381)	0.415 (0.377-0.455)	0.492 (0.446-0.540)	0.548 (0.496-0.601)	0.617 (0.555-0.676)	0.667 (0.597-0.732)	0.716 (0.639-0.789)	0.762 (0.676-0.842)	0.820 (0.720-0.911)	0.864 (0.752-0.966)
10-min	0.555 (0.505-0.609)	0.663 (0.603-0.728)	0.787 (0.714-0.865)	0.876 (0.793-0.961)	0.983 (0.885-1.08)	1.06 (0.951-1.17)	1.14 (1.02-1.25)	1.21 (1.07-1.34)	1.30 (1.14-1.44)	1.36 (1.19-1.52)
15-min	0.693 (0.631-0.762)	0.834 (0.758-0.916)	0.996 (0.903-1.09)	1.11 (1.00-1.22)	1.25 (1.12-1.37)	1.34 (1.20-1.48)	1.44 (1.28-1.58)	1.53 (1.35-1.69)	1.63 (1.43-1.82)	1.71 (1.49-1.91)
30-min	0.950 (0.865-1.04)	1.15 (1.05-1.26)	1.42 (1.28-1.55)	1.61 (1.45-1.76)	1.85 (1.66-2.02)	2.02 (1.81-2.22)	2.20 (1.97-2.43)	2.37 (2.10-2.62)	2.60 (2.28-2.89)	2.77 (2.41-3.09)
60-min	1.19 (1.08-1.30)	1.45 (1.31-1.59)	1.81 (1.65-1.99)	2.09 (1.89-2.29)	2.46 (2.21-2.70)	2.74 (2.46-3.01)	3.04 (2.71-3.34)	3.33 (2.95-3.68)	3.73 (3.27-4.14)	4.04 (3.52-4.51)
2-hr	1.43 (1.29-1.57)	1.74 (1.57-1.91)	2.19 (1.98-2.41)	2.54 (2.29-2.79)	3.02 (2.70-3.31)	3.40 (3.03-3.73)	3.79 (3.36-4.17)	4.18 (3.68-4.62)	4.74 (4.12-5.27)	5.18 (4.46-5.79)
3-hr	1.56 (1.41-1.73)	1.90 (1.72-2.10)	2.40 (2.17-2.66)	2.79 (2.52-3.08)	3.34 (2.99-3.68)	3.77 (3.36-4.17)	4.23 (3.74-4.68)	4.71 (4.12-5.22)	5.37 (4.63-5.99)	5.91 (5.03-6.62)
6-hr	1.97 (1.79-2.18)	2.39 (2.17-2.65)	3.01 (2.72-3.33)	3.52 (3.16-3.88)	4.24 (3.79-4.68)	4.84 (4.29-5.35)	5.49 (4.82-6.07)	6.19 (5.37-6.85)	7.19 (6.13-8.02)	8.02 (6.74-9.01)
12-hr	2.40 (2.19-2.67)	2.91 (2.65-3.23)	3.69 (3.35-4.08)	4.35 (3.93-4.81)	5.33 (4.76-5.88)	6.17 (5.47-6.83)	7.10 (6.21-7.87)	8.13 (7.00-9.06)	9.67 (8.13-10.9)	11.0 (9.07-12.4)
24-hr	2.76 (2.56-2.98)	3.34 (3.10-3.61)	4.24 (3.94-4.58)	5.01 (4.64-5.40)	6.15 (5.65-6.61)	7.13 (6.50-7.65)	8.21 (7.42-8.80)	9.40 (8.40-10.1)	11.2 (9.84-12.0)	12.7 (11.0-13.7)
2-day	3.19 (2.95-3.46)	3.86 (3.58-4.19)	4.92 (4.55-5.34)	5.80 (5.34-6.28)	7.08 (6.49-7.65)	8.17 (7.44-8.83)	9.36 (8.45-10.1)	10.7 (9.53-11.5)	12.6 (11.1-13.6)	14.2 (12.4-15.4)
3-day	3.38 (3.14-3.65)	4.09 (3.80-4.42)	5.18 (4.81-5.60)	6.08 (5.63-6.57)	7.39 (6.80-7.96)	8.49 (7.77-9.15)	9.69 (8.80-10.4)	11.0 (9.90-11.8)	12.9 (11.5-13.9)	14.5 (12.7-15.7)
4-day	3.57 (3.33-3.85)	4.31 (4.02-4.64)	5.44 (5.06-5.86)	6.37 (5.92-6.85)	7.70 (7.12-8.28)	8.82 (8.11-9.47)	10.0 (9.15-10.8)	11.3 (10.3-12.2)	13.2 (11.8-14.2)	14.8 (13.1-15.9)
7-day	4.19 (3.91-4.50)	5.03 (4.70-5.40)	6.26 (5.84-6.73)	7.28 (6.78-7.81)	8.76 (8.11-9.38)	9.99 (9.21-10.7)	11.3 (10.4-12.1)	12.7 (11.6-13.6)	14.8 (13.3-15.9)	16.5 (14.7-17.7)
10-day	4.78 (4.49-5.11)	5.72 (5.37-6.11)	7.02 (6.58-7.49)	8.07 (7.55-8.60)	9.55 (8.91-10.2)	10.8 (9.99-11.5)	12.0 (11.1-12.8)	13.4 (12.3-14.2)	15.3 (13.9-16.3)	16.8 (15.2-18.0)
20-day	6.47 (6.13-6.84)	7.69 (7.28-8.13)	9.21 (8.72-9.73)	10.4 (9.84-11.0)	12.1 (11.4-12.7)	13.4 (12.5-14.1)	14.7 (13.7-15.5)	16.0 (14.9-16.9)	17.8 (16.5-18.9)	19.3 (17.7-20.4)
30-day	8.05 (7.65-8.46)	9.49 (9.02-9.98)	11.1 (10.6-11.7)	12.4 (11.8-13.0)	14.1 (13.4-14.8)	15.4 (14.6-16.2)	16.7 (15.8-17.6)	18.0 (16.9-19.0)	19.7 (18.4-20.8)	21.0 (19.5-22.2)
45-day	10.3 (9.81-10.8)	12.1 (11.5-12.7)	14.0 (13.3-14.6)	15.4 (14.7-16.1)	17.2 (16.4-18.0)	18.6 (17.7-19.4)	19.9 (18.8-20.8)	21.1 (20.0-22.2)	22.7 (21.4-23.9)	23.8 (22.4-25.1)
60-day	12.3 (11.8-12.9)	14.4 (13.8-15.1)	16.5 (15.8-17.3)	18.1 (17.3-18.9)	20.1 (19.1-21.0)	21.5 (20.5-22.5)	22.8 (21.7-23.9)	24.1 (22.9-25.2)	25.7 (24.3-26.9)	26.8 (25.3-28.1)

[1] Precipitation frequency (PF) estimates in this table are based on frequency analysis of partial duration series (PDS).

Numbers in parenthesis are PF estimates at lower and upper bounds of the 90% confidence interval. The probability that precipitation frequency estimates (for a given duration and average recurrence interval) will be greater than the upper bound (or less than the lower bound) is 5%. Estimates at upper bounds are not checked against probable maximum precipitation (PMP) estimates and may be higher than currently valid PMP values.

Please refer to NOAA Atlas 14 document for more information.

Back to Top

PF graphical

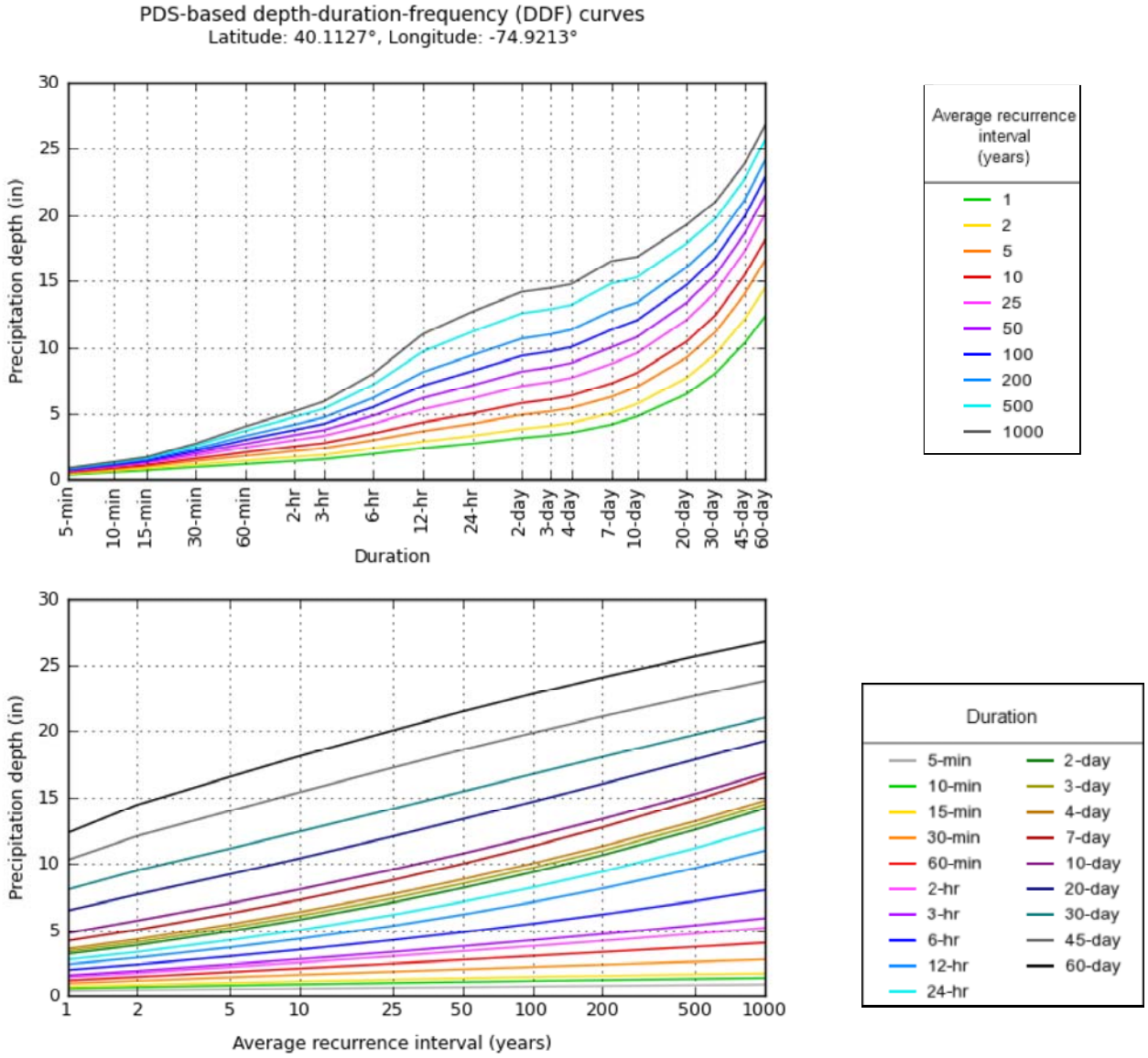

NOAA Atlas 14, Volume 2, Version 3 Created (GMT): Tue Dec 18 14:53:15 2018

Back to Top

Maps & aerials

Small scale terrain

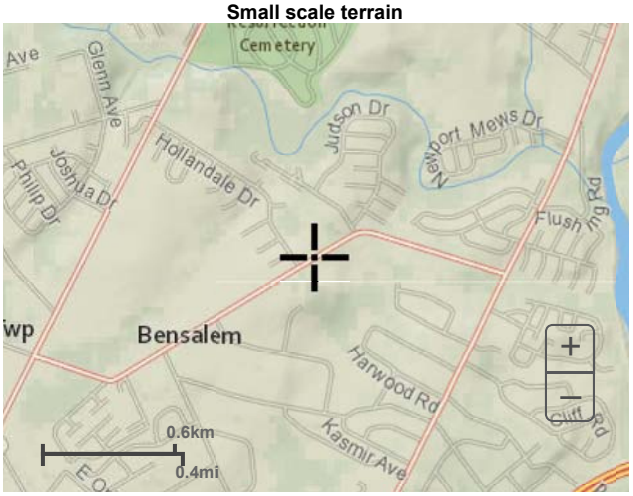

Large scale terrain

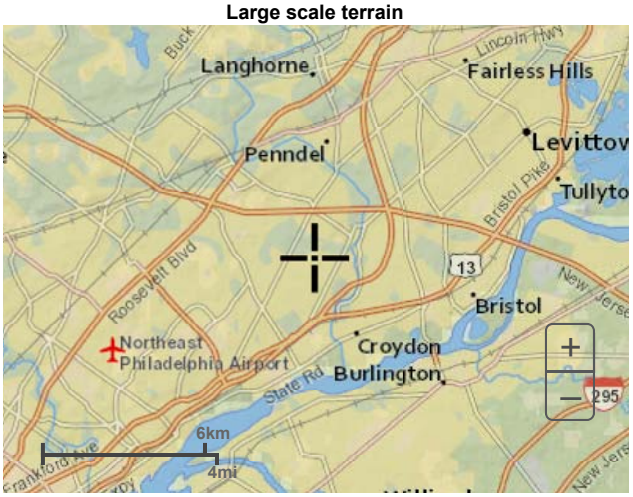

Large scale map

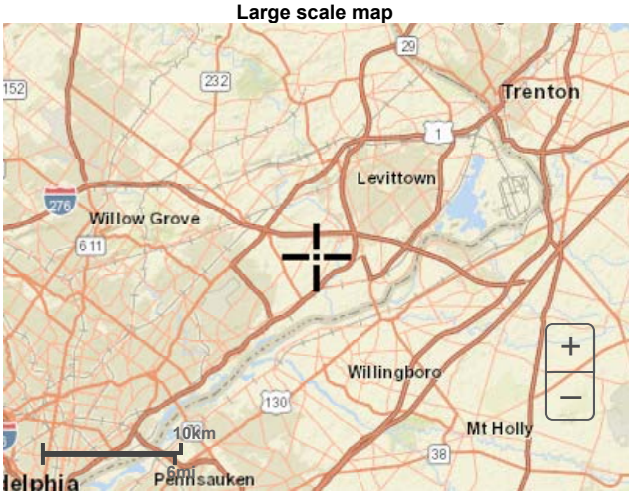

Large scale aerial

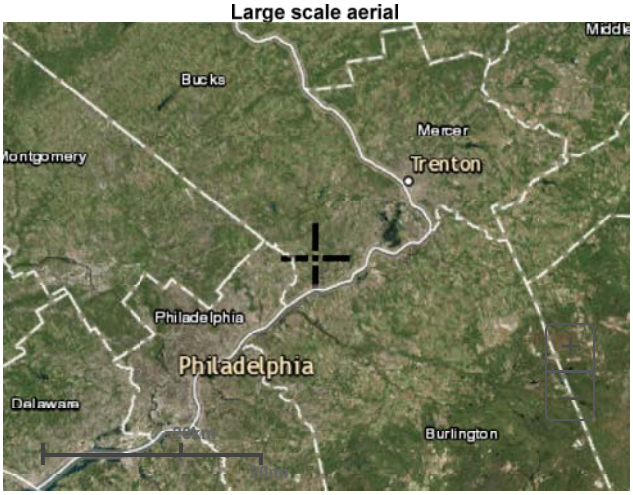

Back to Top

US Department of Commerce
National Oceanic and Atmospheric Administration
National Weather Service
National Water Center
1325 East West Highway
Silver Spring, MD 20910
Questions?: HDSC.Questions@noaa.gov

Disclaimer

Hydraflow Rainfall Report

Return Period (Yrs)	Intensity-Duration-Frequency Equation Coefficients (FHA)			
	B	D	E	(N/A)
1	56.5534	13.1000	0.9016	--------
2	64.1137	13.0000	0.8848	--------
3	0.0000	0.0000	0.0000	--------
5	63.8994	12.6000	0.8317	--------
10	65.8542	12.5000	0.8066	--------
25	58.4505	11.2000	0.7437	--------
50	53.2159	10.2000	0.6986	--------
100	49.4243	9.3000	0.6595	--------

File name: Bensalem Gage.IDF

Intensity = B / (Tc + D)^E

Return Period (Yrs)	Intensity Values (in/hr)											
	5 min	10	15	20	25	30	35	40	45	50	55	60
1	4.15	3.33	2.79	2.41	2.12	1.90	1.72	1.57	1.45	1.35	1.26	1.18
2	4.97	4.00	3.36	2.91	2.57	2.30	2.09	1.91	1.77	1.64	1.53	1.44
3	0.00	0.00	0.00	0.00	0.00	0.00	0.00	0.00	0.00	0.00	0.00	0.00
5	5.88	4.78	4.05	3.52	3.13	2.82	2.57	2.37	2.19	2.05	1.92	1.81
10	6.55	5.34	4.55	3.97	3.54	3.20	2.93	2.70	2.51	2.34	2.20	2.08
25	7.37	6.03	5.15	4.53	4.05	3.68	3.38	3.13	2.92	2.74	2.59	2.45
50	7.95	6.52	5.58	4.92	4.42	4.03	3.71	3.45	3.23	3.04	2.87	2.73
100	8.55	7.02	6.03	5.33	4.80	4.39	4.06	3.78	3.55	3.35	3.17	3.02

Tc = time in minutes. Values may exceed 60.

Precip. file name: N:\181454\Technical\HydraFlow\181454 Precipitation Depth-Inch.pcp

Storm Distribution	Rainfall Precipitation Table (in)							
	1-yr	2-yr	3-yr	5-yr	10-yr	25-yr	50-yr	100-yr
SCS 24-hour	2.67	3.21	0.00	4.03	4.70	5.68	6.49	7.37
SCS 6-Hr	0.00	0.00	0.00	0.00	0.00	0.00	0.00	0.00
Huff-1st	0.00	0.00	0.00	0.00	0.00	0.00	0.00	0.00
Huff-2nd	0.00	0.00	0.00	0.00	0.00	0.00	0.00	0.00
Huff-3rd	0.00	0.00	0.00	0.00	0.00	0.00	0.00	0.00
Huff-4th	0.00	0.00	0.00	0.00	0.00	0.00	0.00	0.00
Huff-Indy	0.00	0.00	0.00	0.00	0.00	0.00	0.00	0.00
Custom	0.00	0.00	0.00	0.00	0.00	0.00	0.00	0.00

SUBSURFACE INFILTRATION & PERCOLATION DATA

HOLE	1ST READ		2ND READ		3RD READ		4TH READ		5TH READ		6TH READ		Depth of Test	Final Reading	RATE (in/hr)
NO.	TIME	DROP	TIME	DROP	TIME	DROP	TIME	DROP	TIME	DROP	TIME	DROP	(inches)	DROP	
1001A	11:00	6/8	11:30 AM	4/8	12:00 PM	4/8	12:30 PM	3/8	1:00 PM	4/8	1:30 PM	2/8	10	2/8	0.5
1001B	11:00	3 3/8	11:30 AM	3 2/8	12:00 PM	2 7/8	12:30 PM	2 6/8	1:00 PM	2 7/8	1:30 PM	2 5/8	10	2 5/8	5.3
1002A	11:05	2/8	12:00 AM	2/8	12:00 AM	1/8	12:30 AM	2/8	1:00 AM	2/8	1:30 AM	2/8	10	2/8	0.5
1002B	11:05	1	11:35 AM	4/8	12:05 PM	3/8	12:35 PM	2/8	1:05 PM	2/8	1:35 PM	2/8	10	2/8	0.5

Average Infiltration Rate **1.7**

Infiltration Rate (F.S. = 2.0) **0.85**

	Capture and Re-use	6.5.2		
Runoff Quality	Constructed Wetlands	6.6.1		
	Wet Pond/Retention Basin	6.6.2		
	Dry Extended Detention Basin	6.6.3		
	Water Quality Filters	6.6.4		
Restoration	Riparian Buffer Restoration	6.7.1		
	Landscape Restoration/Reforestation	6.7.2		
	Soil Amendment	6.7.3		
Other	Level Spreader	6.8.1		
	Special Storage Areas	6.8.2		
	other			

Total Volume Control from Structural BMPs: _____

TABLE B-7. RATIONAL RUNOFF COEFFICIENTS

By Hydrologic Soils Group and Overland Slope (%)

	_____			_____			_____			_____		
	A			B			C			D		
Land Use	0-2%	2-6%	6%+	0-2%	2-6%	6%+	0-2%	2-6%	6%+	0-2%	2-6%	6%+
Cultivated Land	0.08 [a]	0.13	0.16	0.11	0.15	0.21	0.14	0.19	0.26	0.18	0.23	0.31
	0.14 [b]	0.18	0.22	0.16	0.21	0.28	0.20	0.25	0.34	0.24	0.29	0.41
Pasture	0.12	0.20	0.30	0.18	0.28	0.37	0.24	0.34	0.44	0.30	0.40	0.50
	0.15	0.25	0.37	0.23	0.34	0.45	0.30	0.42	0.52	0.37	0.50	0.62
Meadow	0.10	0.16	0.25	0.14	0.22	0.30	0.20	0.28	0.36	0.24	0.30	0.40
	0.14	0.22	0.30	0.20	0.28	0.37	0.26	0.35	0.44	0.30	0.40	0.50
Forest	0.05	0.08	0.11	0.08	0.11	0.14	0.10	0.13	0.16	0.12	0.16	0.20

	0.08	0.11	0.14	0.10	0.14	0.18	0.12	0.16	0.20	0.15	0.20	0.25
Residential												
Lot Size ⅛ Acre	0.25	0.28	0.31	0.27	0.30	0.25	0.30	0.33	0.38	0.33	0.36	0.42
	0.33	0.37	0.40	0.35	0.39	0.44	0.38	0.42	0.49	0.41	0.45	0.54
Lot Size ¼ Acre	0.22	0.26	0.29	0.24	0.29	0.33	0.27	0.31	0.36	0.30	0.34	0.40
	0.30	0.34	0.37	0.33	0.37	0.42	0.36	0.40	0.47	0.38	0.42	0.52
Lot Size ⅓ Acre	0.19	0.23	0.26	0.22	0.26	0.30	0.25	0.29	0.34	0.28	0.32	0.39
	0.28	0.32	0.35	0.30	0.35	0.39	0.33	0.38	0.45	0.36	0.40	0.50
Lot Size ½ Acre	0.16	0.20	0.24	0.19	0.23	0.28	0.22	0.27	0.32	0.26	0.30	0.37
	0.25	0.29	0.32	0.28	0.32	0.36	0.31	0.35	0.42	0.34	0.38	0.48
Lot Size 1 Acre	0.14	0.19	0.22	0.17	0.21	0.26	0.20	0.25	0.31	0.24	0.29	0.35
	0.22	0.26	0.29	0.24	0.28	0.34	0.28	0.32	0.40	0.31	0.35	0.46
Industrial	0.67	0.68	0.68	0.68	0.68	0.69	0.68	0.69	0.69	0.69	0.69	0.70
	0.85	0.85	0.86	0.85	0.86	0.86	0.86	0.86	0.87	0.86	0.86	0.88
Commercial	0.71	0.71	0.72	0.71	0.72	0.72	0.72	0.72	0.72	0.72	0.72	0.72
	0.88	0.88	0.89	0.89	0.89	0.89	0.89	0.89	0.90	0.89	0.89	0.90
Streets	0.70	0.71	0.71	0.71	0.72	0.74	0.72	0.73	0.76	0.73	0.75	0.78
	0.76	0.77	0.79	0.80	0.82	0.84	0.84	0.85	0.89	0.89	0.91	0.95
Open Space	0.05	0.10	0.14	0.08	0.13	0.19	0.12	0.17	0.24	0.16	0.21	0.28
	0.11	0.16	0.20	0.14	0.19	0.26	0.18	0.23	0.32	0.22	0.27	0.39
Parking	0.85	0.86	0.87	0.85	0.86	0.87	0.85	0.86	0.87	0.85	0.86	0.87
	0.95	0.96	0.97	0.95	0.96	0.97	0.95	0.96	0.97	0.95	0.96	0.97
[a] Runoff coefficients for storm recurrence intervals less than 25 years.												
[b] Runoff coefficients for storm recurrence intervals of 25 years or more.												
Source: Rawls, W.J., S.L. Wong and R.H. McCuen, 1981, "Comparison of Urban Flood Frequency Procedures", Preliminary Draft, U.S. Department												

TABLE B-8. MANNING'S ROUGHNESS COEFFICIENTS

VOLUME & PEAK RATE CONTROL

PROJECT	VMC POLE BARN	**BY**	MRC	**DATE**	6/4/2019
LOCATION	BENSALEM TOWNSHIP	**CHECKED**		**DATE**	
	BUCKS COUNTY, PA				

VOLUME CONTROL

Area of Parking Lot	20,490	sf
Paver Porosity	90%	
Impervious surface from Parking Lot	2,049	sf
Impervious surface from Pole Barn Building	12,325	sf
Impervious surface from Canopy Parking	1,800	sf
Impervious surface from Parking Lot	2,049	sf
Total Proposed Impervious	**16,174**	**sf**

Minimum Runoff Volume Required		
100-yr Precipiation Frequency	8.21	in
Required Runoff Volume[(1)]	2,083	cf

Volume Provided		
Depth of TrueGrid	1.8	in
Depth of Subbase	8	in
Total Depth	9.8	in
Total Depth	0.82	ft
Area of Porous Pavement	20,490	sf
Voids	40%	
Porous Pavement Volume	**6,693**	**cf**
Additional Volume Provided	**4,610**	**cf**

PEAK RATE CONTROL

Area of Porous Pavement	20,490	sf
Required Runoff Volume[(1)]	2,083	cf
100-yr Depth of Flow in Porous Pavement	**0.102**	**ft**
	1.2	**in**
Available Depth within Porous Pavement Subbasee	**8.0**	**in**

[(1)] See HydraFlow Report

Hydrograph Summary Report

Hydraflow Hydrographs Extension for Autodesk® Civil 3D® 2019 by Autodesk, Inc. v12

Hyd. No.	Hydrograph type (origin)	Peak flow (cfs)	Time interval (min)	Time to Peak (min)	Hyd. volume (cuft)	Inflow hyd(s)	Maximum elevation (ft)	Total strge used (cuft)	Hydrograph Description
1	Rational	0.343	1	5	103	------	------	------	Woods -A
2	Rational	0.063	1	5	19	------	------	------	Woods-C
3	Rational	0.010	1	5	3	------	------	------	Lawn-A
4	Rational	6.526	1	5	1,958	------	------	------	Impervious-A
6	Combine	6.942	1	5	2,083	1, 2, 3, 4,	------	------	Trib to Porous Pavement

DEWATERING TIME WORKSHEET

PROJECT	VMC POLE BARN	**BY**	MRC	**DATE**	6/4/2019
LOCATION	BENSALEM TOWNSHIP BUCKS COUNTY, PA	**CHECKED**		**DATE**	

$T_d = D / I_S$			
D	Depth of Flow	0.10	ft
D	Depth of Flow	1.22	in
I_S	Infiltration Rate	0.85	in/hr
T_d	**Dewatering Time** [(1)]	**1.4**	**hr**

PIPE SIZING WORKSHEET

PROJECT	VMC Pole Barn	**BY**	MRC	**DATE**	**6/7/2019**
LOCATION	Bensalem Township Bucks County, PA	**CHECKED**		**DATE**	

Rational Equation: Q=ciA

ID	Length (ft)	Slope (ft/ft)	Total Drainage Area (sf)	c	T_c (min)	100-year Intensity (in/hr)	Design Discharge Q_p (cfs)
CULVERT	37.0	0.006	9,397	0.11	5.0	8.21	**0.196**

Manning's Equation: $Q = V*A = [(1.49/n) * R_h^{2/3} * S^{1/2}] *A$

Pipe Diameter	0.5	ft	**Velocity, V**	**2.388**	**ft/s**		
Pipe Area, A	0.196	ft^2	**Discharge, Q**	**0.469**	**cfs**		
Wetted Perimeter, P_w	1.570	ft					
Hydraulic Radius, R_h	0.125	ft		**Is Q > Q_p?**		**Pipe Size is Adequate**	
Slope, S	0.006	ft/ft					
Manning, n	0.012						

APPENDIX

Penn's Trail Environmental, LLC
21 East Lincoln Ave - Suite 160
Hatfield, PA 19440
phone 215-362-4610
climbert@pennstrail.com

Carroll Engineering Corporation
949 Easton Rd.
Warrington, PA 18976

January 21, 2019

RE: Stormwater Percolation Report
VMC Pole Barn
Bensalem Twp., Bucks Co., PA
PTE #3829

Dear Mr. John Koutsouros;

As requested, Penn's Trail Environmental, LLC has performed a subsurface permeability investigation on the referenced parcel. The intent of this investigation was to determine the general permeability characteristics of the areas indicated for proposed stormwater disposal through infiltration. Test excavations were developed with a backhoe and described in accordance with United States Department of Agriculture-Natural Resource Conservation Service (USDA-NRCS) methodology.

A professional soil scientist described test borings in accordance with United States Department of Agriculture-Natural Resource Conservation Service (USDA-NRCS) methodology and conducted permeability testing in accordance with PA Code Title 25, Chapter 73, §73.15 (4), (6) & (7) in the area proposed for stormwater infiltration. These areas are intended to act as infiltration areas for lot by lot control of increases in rate of runoff as occurs with the addition of impervious surfaces. Testing was conducted at depths established by the project engineer below existing grade or adjusted for shallow bedrock or groundwater encountered in test excavations. The test auger holes and the percolation holes were hand dug.

Soil profile descriptions were developed at each test point and include information such as texture, structure, soil depth, and indication (or lack thereof) of a seasonal high water table or restricted drainage as would be indicated by redoximorphic features. Redox features often occur when infiltrating water encounters a slowly permeable layer as it moves downward through the soil profile. These features do not indicate a true water table or zone that is saturated for prolonged periods by regional groundwater at this site. Regional groundwater was not encountered and should not be used as the most limiting design factor.

Pre-development USDA-NRCS soil mapping at this site, or more specifically the test locations, was Udorthents. Udorthents consist of gently sloping to moderately sloping areas where the original soil has been cut away or covered with a loamy fill material. Most of these areas have been graded to a smooth surface with 4 to 10 inches of topsoil. This soil commonly occupies upland areas, but occurs in a variety of landscape positions. Areas that have been filled may be derived from several source or a single source from an adjacent cut. In many areas the fill is compact and firm when dry. The majority of these areas have grass vegetation. Some areas on slopes of 15-25 percent lack a vegetative cover because of erosion and slope instability. Permeability: moderate to slow throughout. Depth to bedrock: more than 60 inches. Seasonal high water table: Depth: variable. Most areas of this map unit are used for parks, recreation fields and buildings. Although these areas have soil characteristics that are quite variable with depth they are generally well suited to building sites. Layers that restrict permeability, and buried objects may hinder deep excavations. This soil is fairly suited to lawns, landscaping and vegetable gardens. In highly urbanized areas these soils may provide some of the best sites for vegetable gardens. The soil characteristics are variable, requiring on-site investigation before suitability for specific land uses can be evaluated.

The moderately deep, moderately well drained soil at testing location 1001 are derived primarily from loess with intermittent alluviation. Testing location 1002 is derived from alluvium overlaying loess, overlaying glacial outwash. These locations are more accurately classified as the Haubstadt taxadjunct and the Haubstadt soil series, respectively. While deviation from published mapping was encountered at this site, this investigation was not conducted for the purpose of disputing current mapping or as a re-mapping effort.

Soil profiles of backhoe excavated test pits were developed to depths at or near final constructed grade of proposed stormwater control facilities. The most restrictive barriers from the point of infiltration to contacting the base flow groundwater table were determined. The most common of these barriers in our region include restrictive soil horizons, varying lithology, fracturing of the bedrock or insufficient fracturing of the bedrock, and encountering groundwater among other factors. Our field observations, as reported on the attached soil profile data sheets, indicate that bedrock was not encountered. Redoximorphic features were noted in both test pits throughout the entire loess derived fragic horizon and at depths as shallow as sixteen (16) inches as encountered in Test Pit 1002. Subsequent detailed testing more accurately predicts the ability of the soil to efficiently infiltrate stormwater and has been attached.

Testing sought to identify zones that would potentially allow the infiltration of stormwater. The testing protocol used considers regional construction practices, the likelihood of "silting in" during and following construction and the subsurface characteristics of the soil and geology. The determination at this site was that restrictive horizons present the most restrictive condition to establish installation depth for infiltration of stormwater. The double rings were established at a level with sufficient residual subsoil above bedrock to seat and seal the rings permitting unsaturated flow through the soil to the water table.

The recommended acceptable range for subsurface disposal of stormwater is 0.10 inches per hour to 10.0 inches per hour according to current BMP guidance. Surface basins where additional storage is economical can have much slower rates and still provide some infiltration. Our office recommends that the design engineer assume zero infiltration for any stormwater area which achieves less than 0.10 inches per hour. There are various means to arrive at an infiltrative rate for the substratum following testing. Our method is to use the "last" reading as is common for percolation testing for wastewater disposal.

Testing was conducted at discreet locations selected by the project engineer using double ring infiltrometers. Data sheets containing the information recorded for the soil profile descriptions and double ring infiltrometers have been included as attachments to this report. A table summarizing the field data can be found below:

Stormwater Testing Summary

Test Location	Depth of Test Pit Inches	Depth to Water Inches	Depth to Rock Inches	Depth of Testing Inches	Infiltration Rate Inches per hour
1001 A	48	---	---	10	0.5
1001B	48	---	---	10	5.3
1002A	55	---	---	10	0.5
1002B	55	---	---	10	0.5

The soil encountered demonstrated varied infiltration rates. Subsurface conditions may change following construction and resultant redirection of surface water following development. Results suggest that the average infiltration rates at each of the tested locations are within the recommended guidelines.

Stormwater control devices can include surface and subsurface facilities that allow the design engineer flexibility in reducing velocity containing and disposing of stormwater on this site due to the fragic and varying composition of the soil at this site. Surface features such as vegetated swales and berms can be employed to reduce overland flow and retain water in-situ thus extending contact time and providing for additional infiltration.

Our findings are a result of testing conducted in specific locations and conditions. Should evidence contrary to the findings in this report be discovered prior to, during, or after construction of the stormwater control devices, our office must be notified immediately so our recommendations can be reviewed and revised if necessary. Penn's Trail Environmental, LLC expresses no guarantee that the soil conditions following excavation will be identical to those encountered during this investigation. We recommend that caution is exercised during construction to minimize compaction, or other disturbance in those areas intended for use as infiltration areas.

Please review the enclosed information and if you have any questions please do not hesitate to contact our office. A copy of this report and data should be forwarded to the township are at your first convenience and along with any stormwater design.

Sincerely,
Penn's Trail Environmental, LLC

Colleen Limbert
Soil Scientist

Penn's Trail Environmental, LLC

21 East Lincoln Ave - Suite 160
Hatfield, PA 19440
ph. (215) 362-4610
fax (215) 362-4620

Date: 1/14/19 Pit # 1001 PTE # 3829
Project: VMC Pole Barn-Carroll Eng.
Location: 1440 Byberry Road
Bensalem Twp., Bucks Co., PA
Soil Series: Haubstadt taxadjunct

Horizon	Depth (In.)	Color	Redox Features	Texture	Structure	Consistence	Boundary
A	0-5	10YR 5/4		silt loam	moderate medium sbk	very friable	clear wavy
Bt	5-33	10YR 6/4		silt loam	strong coarse pl/ moderate coarse sbk	friable	gradual wavy
Btx	33-48	10YR 7/2	many distinct	silt loam	weak coarse sbk	friable/ firm	

Soil Scientist: Colleen Limbert

Notes: Relic Delaware River flood event seen at 27" below surface (3" thick)

EPIPEDON
Ochric

SUBSURFACE HORIZON(S)
Argillic
Fragipan

SOIL ORDER
Alfisol

DRAINAGE CLASS
Moderately well drained

LANDFORM
Upland

POSITION
Backslope

PARENT MATERIAL
Loess

BEDROCK LITHOLOGY
Schist

REDOX FEATURES

Abundance
Few ..... <2%
Common.. 2-20%
Many.....>20%

Contrast
faint
hue & chroma of matrix and redox are closely related.
distinct
matrix & redox features vary 1-2 units of hue and several units of chroma & value.
prominent
Matrix & redox features vary several units in hue, value, & chroma.

COARSE FRAGMENTS (% of profile)

15-35%	35-65%	>65%
gravelly	very gravelly	extremely gravelly
channery	very channery	extremely channery
cobbly	very cobbly	extremely cobbly
flaggy	very flaggy	extremely flaggy
stony	very stony	extremely stony

BOUNDARY
Distinctness
abrupt...<1" (thick) *gradual*...2.5-5"
clear.....1-2.5" *diffuse*.....>5
Topography
smooth - boundary is nearly level
wavy - pockets with width greater than depth
irregular - pockets with depth greater than width

STRUCTURE

Grade
S*tructureless* - No observable aggregation or arrangement of lines of weakness.
Weak - Poorly formed, indistinct peds barely observable in place.
Moderate - Well-formed, distinct peds moderately durable & evident in place.
Strong - Durable peds evident in undisturbed soil & become separated when disturbed.

Type
pl - platy
pr - prismatic
cpr - columnar
gr - granular
abk - angular blocky
sbk - subangular blocky

Penn's Trail Environmental, LLC

21 East Lincoln Ave - Suite 160
Hatfield, PA 19440
ph. (215) 362-4610
fax (215) 362-4620

Date: 1/14/19 Pit # 1002 PTE # 3829
Project: VMC Pole Barn-Carroll Eng.
Location: 1440 Byberry Road
Bensalem Twp., Bucks Co., PA
Soil Series: Haubstadt

Horizon	Depth (In.)	Color	Redox Features	Texture	Structure	Consistence	Boundary
A	0-5	10YR 4/4		silt loam	moderate medium sbk	very friable	clear wavy
2Bt	5-16	10YR 5/4		very gravelly loam	strong coarse pl/ strong fine sbk	friable	clear smooth
3Btx	16-48	7.5YR 5/6	common faint	silty clay loam	weak coarse sbk	friable/ firm	abrupt smooth
4C	48-55	10YR 5/1		mica loamy sand	strong fine sbk/ single grain	very friable	

Soil Scientist: Colleen Limbert

Notes:

EPIPEDON
Ochric

SUBSURFACE HORIZON(S)
Argillic

SOIL ORDER
Alfisol

DRAINAGE CLASS
Moderately well drained

LANDFORM
Upland

POSITION
Backslope

PARENT MATERIAL
Alluvium
Loess
Glacial Outwash

BEDROCK LITHOLOGY
Schist

REDOX FEATURES
Abundance
Few ..... <2%
Common.. 2-20%
Many.....>20%
Contrast
faint
hue & chroma of matrix and redox are closely related.
distinct
matrix & redox features vary 1-2 units of hue and several units of chroma & value.
prominent
Matrix & redox features vary several units in hue, value, & chroma.

STRUCTURE
Grade
S*tructureless* - No observable aggregation or arrangement of lines of weakness.
Weak - Poorly formed, indistinct peds barely observable in place.
Moderate - Well-formed, distinct peds moderately durable & evident in place.
Strong - Durable peds evident in undisturbed soil & become separated when disturbed.

COARSE FRAGMENTS (% of profile)

15-35%	35-65%	>65%
gravelly	very gravelly	extremely gravelly
channery	very channery	extremely channery
cobbly	very cobbly	extremely cobbly
flaggy	very flaggy	extremely flaggy
stony	very stony	extremely stony

BOUNDARY
Distinctness
abrupt...<1" (thick) *gradual*...2.5-5"
clear.....1-2.5" *diffuse*.....>5
Topography
smooth - boundary is nearly level
wavy - pockets with width greater than depth
irregular - pockets with depth greater than width

Type
pl - platy
pr - prismatic
cpr - columnar
gr - granular
abk - angular blocky
sbk - subangular blocky

SUBSURFACE INFILTRATION & PERCOLATION DATA

HOLE	1ST READ		2ND READ		3RD READ		4TH READ		5TH READ		6TH READ		Depth of Test	Final Reading DROP	RATE (in/hr)
NO.	TIME	DROP	TIME	DROP	TIME	DROP	TIME	DROP	TIME	DROP	TIME	DROP	(inches)		
1001A	11:00	6/8	11:30 AM	4/8	12:00 PM	4/8	12:30 PM	3/8	1:00 PM	4/8	1:30 PM	2/8	10	2/8	0.5
1001B	11:00	3 3/8	11:30 AM	3 2/8	12:00 PM	2 7/8	12:30 PM	2 6/8	1:00 PM	2 7/8	1:30 PM	2 5/8	10	2 5/8	5.3
1002A	11:05	2/8	12:00 AM	2/8	12:00 AM	1/8	12:30 AM	2/8	1:00 AM	2/8	1:30 AM	2/8	10	2/8	0.5
1002B	11:05	1	11:35 AM	4/8	12:05 PM	3/8	12:35 PM	2/8	1:05 PM	2/8	1:35 PM	2/8	10	2/8	0.5

PROJECT INFORMATION

Date: 1/14/2019

Project Name: VMC Pole Barn

Subdivision: NA **Lot #** NA

Location: 1440 Byberry Road

Municipality: Bensalem

Scientist: Colleen Limbert

Field Conditions: Precip. Last 24 Hours ☐ YES ☑ NO

Weather: Sunny ☑ YES Cloudy ☑ YES Clear ☐ YES

Rain ☐ YES Snow ☑ YES Dry ☐ YES

PTE# 3829

Penn's Trail Environmental, LLC
21 East Lincoln Ave - Suite 160
Hatfield PA 19440
Ph. 215-362-4610
Fax. 215-362-4620

TP 1001
TP 1002
230'
103'
42'
1.5CON LIGHT POLE
CON LIGHT POLE
IRON PIN SET
NO PARKING SIGN
STOP SIGN
UP STUMP 3H
TYPE "C" INLET
TG 92.66
INV IN
INV OUT
TYPE "C" INLET
TG 91.93
INV IN
INV OUT
TYPE "M" INLET
TG 80.01
INV IN
INV OUT
ELECTRIC TRANSFORMER

NESHAMINY CREEK STORMWATER MANAGEMENT PLAN PHASE II STUDY

APPENDIX D MANAGEMENT DISTRICTS

Legend

- MANAGEMENT DISTRICTS
- SUBAREAS
- STREAMS
- WATER BODIES
- COUNTY BOUNDARY
- MUNICIPAL BOUNDARY

ROADS

- Interstate
- US Federal Highway
- PA State Route
- Other State Road

Management District Legend

District	Design Storm Proposed Conditions		Design Storm Existing Conditions
A	2-Year 5-Year 10-Year 25-Year 50-Year 100-Year	Reduce To	1-Year 5-Year 10-Year 25-Year 50-Year 100-Year
B	2-Year 5-Year 10-Year 25-Year 50-Year 100-Year	Reduce To	1-Year 2-Year 5-Year 10-Year 25-Year 50-Year
C	2-Year 5-Year 10-Year 25-Year 50-Year 100-Year	Reduce To	2-Year 5-Year 10-Year 25-Year 50-Year 100-Year

3 1.5 0 3
Scale in Miles

Prepared For:
Bucks County Planning Commission
The Almshouse
Neshaminy Manor
Doylestown, PA

NOTES:
Portions of this map were generated from the existing data sources as listed below. These existing data sources were utilized for base mapping purposes and are shown for spatial reference only. These data sources did not enter into any computations or affect the reliability of the hydrological analyses. Borton-Lawson Engineering has found some inaccuracies in some of these data sources and has corrected the data where these discrepancies were obvious, however it was not a part of this ACT 167 Plan to correct all of the base data.

DATA SOURCES:
Watershed Boundary - PADEP- Updated by BLE
Municipal and County Boundaries - PennDOT
Roads - PennDOT
Streams - Bucks and Montgomery County Planning Commissions
Water Bodies - Derived from the Streams Data
Management Districts and Subareas- Delineated by BLE

Acronyms
PennDOT - Pennsylvania Department of Transportation
PADEP - Pennsylvania Department of Environmental Protection
BLE - Borton Lawson Engineering

Borton Lawson ENGINEERING

Northeast Pennsylvania
613 Baltimore Drive
Wilkes-Barre, PA 18702
Tel: 570-821-1999

Lehigh Valley
3893 Adler Place
Bethlehem, PA 18017
Tel: 484-821-0470

PREPARED BY: WSB
DATE: 12/18/2006

CHECKED BY:
PROJECT NO.: 2003-1412-00