BENSALEM TOWNSHIP

Building and Planning Department
2400 Byberry Road • Bensalem PA 19020
215-633-3644 • FAX 215-633-3653

E-MAIL SUBMIT

SUBDIVISION AND LAND DEVELOPMENT APPLICATION
SITE AND PLAN CHARACTERISTICS

ALL APPLICANTS FOR MINOR or MAJOR LAND DEVELOPMENT and MAJOR SUB-DIVISIONS MUST SUBMIT A TRAFFIC STUDY AT TIME OF SUBMISSION

CHECK ONE:

DATE OF SUBMISSION: October 5, 2016

☐ Sketch Plan	Tax Parcel #	02-036-008
☐ Lot Line Change	Location	2746 Mechanicsville Road
☐ Minor Subdivision	Zoning Classification	Residential District (R-1-A)
☐ Minor Land Development	Proposed # of Lots or Leaseholds	1
☐ *Preliminary Subdivision*	Area of Commercial Bldg of Addition (sf)	24,340
☑ Preliminary Land Development	Name of Development	Samarpan Hindu Temple
☐ Final Subdivision	Proposed Use	Church
☐ Final Land Development	Site Area (ac)	7.85
☐ Conditional Use	Development Area (ac)	5.92
☐ Other		

SUBMISSION IS TO INCLUDE A DISC WITH APPLICATION AND PLAN(S) IN PDF FILE FORMAT or email same to jmryan@bensalempa.gov

1. Name, address & phone No. of Applicant:

Dipak J Patel
Signature

Dipak Patel, Treasurer, Samarpan Hindu Temple
2746 Mechanicsville Road, Bensalem, PA 19020
Phone: 215-264-5154
Daytime Contact Number

2. Name, address & phone No. of Attorney:
(if other than applicant)

Thomas R Hecker
Signature

Begley, Carlin & Mandio
Tom Hecker
680 Middletown Boulevard
Langhorne, PA 19047
Daytime Contact Number

3. Name, address & phone No. of Owner:

Dipak J Patel
Signature

Dipak Patel, Treasurer
Samarpan Hindu Temple
2746 Mechanicsville Road, Bensalem, PA 19020
Phone: 215-264-5154
Daytime Contact Number

4. Name, address & phone No. of Person Designing Plan:

Signature

Heath Alan Dumack
Dumack Engineering
1038 Second Street Pike, Richboro, PA 18954
Phone: 215-598-1230
Daytime Contact Number

5. Has parcel ever been subject to subdivision or land development approval? No

If Yes:
- Date of Approval: Unknown
- Plan Title: Unknown
- Recording Date: Unknown
- Plan Book: Unknown
- Page: Unknown

6. Has parcel ever received relief from the Zoning Hearing Board? Yes

If yes, list date of decision and attach copy of the decision. 12/12/13 and 07/07/2016

7. Deed restrictions that apply or are being contemplated. If no restrictions, state none. If yes, attach copy.

None

8. List proposed improvements and utilities to be installed:

The proposed site will consist of a church with parking and associated amenities. Additionally, a stormwater management system is proposed in conjunction with a stormwater conveyance system. Electric, telephone, water, and sewer connections will be installed from public facilities and a propane tank will be located on-site.

9. List title of each plan, report and any other documents submitted:

Title Sheet, Record Plan, Existing Features & Demolition Plan, Natural Resources Protection Plan, Post Construction Stormwater Management Plan, Drainage & Utility Plan, Erosion & Control Plan, Erosion & Control Notes & Details, Erosion & Control Details, Landscape Plan, Landscape Details, Lighting Plan, Utility Profiles, Construction Details, Construction Details, Construction Details, Truck Turning Plan, Stormwater Management Report, Floodplain Analysis Calculations & Map

10. List presence of floodplain, wetlands, steep slopes or any other environmental features on site:

Floodplain, Woodlands, Steep Slopes, Poquessing Creek.

11. List all variances and special exceptions that will be required from the Zoning Hearing Board for this application:

The Zoning Hearing Board decisions have been attached with this application.

12. List all zoning changes, conditional uses and waivers that will be required for this application:

Section 201-41.(d)(9) and Section 196-61.(b)(1)

All waivers are listed and explained on the Record Plan.

***NOTE**: Plan requirements can be found in The Code of the Township of Bensalem, Chapter 201*

MUNICIPAL USE ONLY

Date Received: _____

Application Fee: _____

Escrow: _____ _____ _____

A COPY OF THIS APPLICATION WITH SIGNATURES IS REQUIRED PRIOR TO ISSUANCE OF PERMIT

ZONING HEARING BOARD OF BENSALEM TOWNSHIP, BUCKS COUNTY, PA
CERTIFICATION OF DECISION

APPEAL NO. 2013-365 **TAX PARCEL NO.** 02-036-008

ADDRESS: 2746 Mechanicsville Road Bensalem, PA 19020

OWNER: Arthur A. DeLarso, Jr.

APPELLANT: Samarpan Hindu Temple c/o Sentech, Inc. Attn: Dipak Patel

This certifies that the Zoning Hearing Board of Bensalem Township held a hearing on **December 12, 2013**, at **7:30 p.m.**, in the Bensalem Township Municipal Building and considered the appeal application for ~~Special Exception~~/Variance/~~Reversal of Determination of Zoning Officer~~ filed by **Samarpan Hindu Temple c/o Sentech, Inc. Attn: Dipak Patel** on **November 21, 2013** to seek relief as stated on the advertised legal notice of appeal or application.

More specifically, the Board considered and rendered a decision on a request for relief from the following provisions of the Zoning Ordinance:

Section	Description	Decision	Vote
232-124	use	Granted	4-0

The Decision of the Board is subject to the following special conditions:

None

ANGELINE DOMANICO

GEORGE SEYMOUR

Absent

JOANNE REDDING

MICHAEL BRILL

ALBERT CHAMPION

December 12, 2013
DATE

This is not a building or zoning permit. Such permits must be secured from the appropriate township officials prior to construction or use of the premises. Building permits must be secured within one (1) year of the date of the decision granting a use variance and within two (2) years of the date of the decision granting a dimensional variance or any approval by this Board is automatically voided. Applicant must comply with all other applicable township, county, state and federal laws, regulations and ordinances.

Findings of Fact and Conclusions of Law will be approved by the Zoning Hearing Board at its next regularly scheduled meeting and forwarded to Appellant with the

ZONING HEARING BOARD OF BENSALEM TOWNSHIP, BUCKS COUNTY, PA
CERTIFICATION OF DECISION

APPEAL NO. 2016-497 **TAX PARCEL NO.** 02-036-008

ADDRESS: 2746 Mechanicsville Road

OWNER: Samarpan Hindu Temple **APPELLANT:** Samarpan Hindu Temple

This certifies that the Zoning Hearing Board of Bensalem Township held a hearing on **JULY 7, 2016 (CONTINUED FROM June 2, 2016 hearing)** , at **7:30 p.m.** in the Bensalem Township Municipal Building and considered the application for **VARIANCES** filed by the above-named Appellant to seek relief as stated on the advertised legal notice of appeal or application.

More specifically, the Board considered and rendered a decision on a request for relief from the following provisions of the Township's Zoning Ordinance:

SECTION	DESCRIPTION	DECISION	VOTE
232-104.503.A	Permit floodplain disturbance of 34% greater than 0% permitted	**GRANTED/DENIED**	5-0
232-59.(a)(2)a.1	Permit steep slope disturbance of 50% for 8-15% slopes	**GRANTED/DENIED**	5-0
232-59.(a)(2)a.2	Permit steep slope disturbance of 35% for 15-25% slopes	**GRANTED/DENIED**	5-0
232-125.(d)	Permit impervious surface coverage of 39.85%	~~**GRANTED/DENIED**~~	*WITHDRAWN*
232-781.(b)(1)	Extension of one year time frame for submission of building permits for use variance previously granted	**GRANTED/DENIED**	5-0
		GRANTED/DENIED	

The Decision of the Board is subject to the following special conditions:

In accordance with Ex A-7

ANGELINE DOMANICO

GEORGE SEYMOUR

JOANNE REDDING

MICHAEL BRILL

ALBERT CHAMPION

JULY 7, 2016
DATE

This is not a building or zoning permit. Such permits must be secured from the appropriate Township officials prior to construction or use of the premises. Building permits must be secured within two (2) years of the date of the decision granting a use or dimensional variance or any approval by this Board is automatically voided. Applicant must comply with all other applicable township, county, state and federal laws, regulations and ordinances.

4/12/2016
AJM

DUMACK ENGINEERING
A PROFESSIONAL CORPORATION
CIVIL - STRUCTURAL ENGINEERS & SURVEYORS

1038 2nd Steet Pike
Richboro, PA 18954

Project #: 5447
Sheet: 1

Dipak Patel

Watershed Analysis
Rational Method (Q=CIA)

Soil Tabulations

*Soil UfuB assumed to be group C

Type	Soil Group	Slope	Land Use	C >25 Yrs	A (ft^2)
Ukb	B	8%	Open	0.26	111573.74
Ukb	B	8%	Forest	0.18	155957.67
Ukb	B	8%	Parking	0.97	42396.32
Ukb	B	8%	1 Acre Lot	0.36	880606.93
Total					**1190534.66**
UfuB	C*	8%	Open	0.32	39464.65
UfuB	C*	8%	Forest	0.2	46917.44
UfuB	C*	8%	Parking	0.97	228823.52
Total					**315205.61**
DdA	D	3%	Open	0.27	160675.11
DdA	D	3%	Forest	0.2	243817.3
DdA	D	3%	Parking	0.96	28750.47
DdA	D	3%	1 Acre Lot	0.35	121172.58
Total					**554415.46**

T_c

Sheet Flow

Surface	n	L (ft)	P_{2Y}/24hr (in)	s	T_t (hours)
Grass - Residential	0.3	100	3.26	0.01	0.371694593
Total					0.371694593

Shallow Concentrated Flow

Surface	L (ft)	s	k_v (ft/s)	V_{avg} (ft/s)	T_t (hours)
Grass - Residential	447.78	0.012282817	7	0.775795112	0.160330133
Heavy Timber (Light Brush)	489.9	0.004592774	5	0.338850042	0.401603413
Grass - Residential	58.59	0.017067759	7	0.914505435	0.017796504
Total					0.57973005

Channel Flow

Surface	L (ft)	a (ft^2)	Pw (ft)	s	n	r (ft)	V (ft/s)	T_t (hours)
Segment 1	347.43	0.883575	3.1416	0.014391388	0.045	0.28125	1.70511413	0.056599339
Segmen 2	547.36	0.883575	3.1416	0.021923414	0.045	0.28125	2.10453524	0.072246091
Total								0.12884543

Tc 1.08 hours

Q=CIA

Type	Land Use	C >25 Yrs	A (ft2)	I 100 Yrs (in/hr)	Q (ft3/s)
Ukb	Open	0.26	2.561380624	2.69	1.791429609
Ukb	Forest	0.18	3.580295455	2.69	1.733579059
Ukb	Parking	0.97	0.973285583	2.69	2.539594072
Ukb	1 Acre Lot	0.36	20.2159534	2.69	19.57712927
UfuB	Open	0.32	0.905983701	2.69	0.77987077
UfuB	Forest	0.2	1.077076217	2.69	0.579467005
UfuB	Parking	0.97	5.253065197	2.69	13.70682302
DdA	Open	0.27	3.688592975	2.69	2.679025078
DdA	Forest	0.2	5.597275023	2.69	3.011333962
DdA	Parking	0.96	0.660019972	2.69	1.704435577
DdA	1 Acre Lot	0.35	2.781739669	2.69	2.619007899
Total					**50.72169532**

Total

I (yrs)	Q (ft^3/s)
100	50.72

UkB

Grass	Woods	Imp	1 Acre	Total
7210.72	95447.28	19826.25	415641.7	1190631.64
83842.79	48414.28	22570.07	145058.1	
20520.23	12096.11		319907.2	
111573.74	155957.67	42396.32	880606.9	1190534.66
				-96.98
				-0.01%

UkB 1

Grass	Woods	Imp		1 Acre	Total
7210.72	95447.28			415641.7	622603.1
83842.79					
20520.23					
111573.7	95447.28		0	415641.7	622662.7
					59.6
					0.01%

UkB 2

Grass	Woods	Imp	1 Acre	Total
	48414.28	19826.25	145058.1	568028.5
	12096.11	22570.07	319907.2	
0	60510.39	42396.32	464965.2	567872
				-156.58
				-0.03%

UfuB

Grass	Woods	Imp	1 Acre	Total
39464.65	46917.44	228823.52		315205.61
39464.65	46917.44	228823.52	0	315205.61
				0
				0.00%

DdA

Grass	Woods	Imp	1 Acre	Total
8776.68	93172.15	28750.47	24984.65	554461.16
50504.64	150645.15		50587.9	
56046.31			45600.03	
22652.27				
22695.21				
160675.11	243817.3	28750.47	121172.6	554415.46
				-45.7
				-0.01%

Surface Description	k_v (ft/s)
Paved	20.3
Unpaved	16.1
Grassed Waterway	15
Nearly Bare & Untilled	10
Cultivated Straight Rows	9
Short Grass Pasture	7
Woodland	5
Forest w/Heavy Litter	2.5

1

Location	Elevation
2.89	99
2.77	98
12.68	97
1.63	98
1.73	99

Surface	L (ft)	a (ft^2)	Pw (ft)	s	n	r (ft)	V (ft/s)	Q=VA	Qactual
Segmen 2	547.36	14.88	17.54	0.021923	0.045	0.848347	4.393494402	65.3751967	50.72
Segmen 2	547.36	13.03	17	0.021923	0.045	0.766471	4.106055785	53.50190688	50.72
Segmen 2	547.36	12.9	16.9	0.021923	0.045	0.763314	4.094773208	52.82257438	50.72
Segmen 2	547.36	12.96	16.98	0.021923	0.045	0.763251	4.094548877	53.06535344	50.72
Segmen 2	547.36	12.92	16.97	0.021923	0.045	0.761344	4.087724614	52.81340201	50.72
Segmen 2	547.36	20.32	56.14	0.021923	0.045	0.361952	2.489977252	50.59633776	50.72

97.8835

2

Location	Elevation
4.18	98
1.93	97
5.36	96
3.41	95
3.83	96
5.02	97
8.6	98

Surface	L (ft)	a (ft^2)	Pw (ft)	s	n	r (ft)	V (ft/s)	Q=VA	Qactual
Segmen 2	547.36	8	12	0.021923	0.045	0.666667	3.741395991	29.93116793	50.72
Segmen 2	547.36	15.17	16.47	0.021923	0.045	0.921069	4.641116859	70.40574275	50.72
Segmen 2	547.36	12.99	15.44	0.021923	0.045	0.841321	4.369204973	56.7559726	50.72
Segmen 2	547.36	11.87	14.9	0.021923	0.045	0.796644	4.213123109	50.00977131	50.72
Segmen 2	547.36	12.02	14.97	0.021923	0.045	0.802939	4.235288127	50.90816329	50.72
Segmen 2	547.36	12.02	14.97	0.021923	0.045	0.802939	4.235288127	50.90816329	50.72

96.295

3

Location	Elevation
2.25	97
2.15	96
2.14	95
2.24	94
3.59	93
4.86	94
6.6	95
6.91	96
12.34	97

Surface	L (ft)	a (ft^2)	Pw (ft)	s	n	r (ft)	V (ft/s)	Q=VA	Qactual
Segmen 2	547.36	15	15	0.021923	0.045	1	4.902615673	73.53923509	50.72
Segmen 2	547.36	12.84	15.07	0.021923	0.045	0.852024	4.406181305	56.57536796	50.72
Segmen 2	547.36	12	14.55	0.021923	0.045	0.824742	4.311615433	51.73938519	50.72
Segmen 2	547.36	11.76	14.39	0.021923	0.045	0.817234	4.285408248	50.39640099	50.72
Segmen 2	547.36	20.32	11.76	0.021923	0.045	1.727891	7.059470111	143.4484327	50.72
Segmen 2	547.36	20.32	14.39	0.021923	0.045	1.412092	6.170728741	125.389208	50.72

94.375

4

Location	Elevation
9.42	96
9.12	95
0.77	94
1.04	93
12.65	92
1.69	92
1.12	93
4.29	94
26.99	95
	96

Surface	L (ft)	a (ft^2)	Pw (ft)	s	n	r (ft)	V (ft/s)	Q=VA	Qactual
Segmen 2	547.36	12.22	15.66	0.021923	0.045	0.780332	4.155412559	50.77914147	50.72

Elevation
92.8824

pl

5

Location	Elevation
9.19	96
13.42	95
2.42	94
3.16	93
3.12	92
5.29	91
1.87	91

Surface	L (ft)	a (ft^2)	Pw (ft)	s	n	r (ft)	V (ft/s)	Q=VA	Qactual
Segmen 2	547.36	13.4688	13.1213	0.021923	0.045	1.026484	4.988797492	67.19311566	50.72
Segmen 2	547.36	11.29	12.24	0.021923	0.045	0.922386	4.645539944	52.44814597	50.72
Segmen 2	547.36	10.71	12	0.021923	0.045	0.8925	4.544645363	48.67315183	50.72
Segmen 2	547.36	11	12.12	0.021923	0.045	0.907591	4.595730567	50.55303624	50.72
Segmen 2	547.36	12.22	15.66	0.021923	0.045	0.780332	4.155412559	50.77914147	50.72
Segmen 2	547.36	12.22	15.66	0.021923	0.045	0.780332	4.155412559	50.77914147	50.72

1.19	92
1.02	93
10.64	94
15.19	95
	96

92.2943

6

Location	Elevation
7.95	95
3.09	94
3.41	93
3.55	92
3.86	91
24.2	90
19	90
3.43	91
3.62	92
3.63	93
5.64	94
	95

Surface	L (ft)	a (ft^2)	Pw (ft)	s	n	r (ft)	V (ft/s)	Q=VA	Qactual
Segmen 2	547.36	35.63	47.21	0.021923	0.045	0.754713	4.063956623	144.7987745	50.72
Segmen 2	547.36	14.96	35.71	0.021923	0.045	0.41893	2.744873566	41.06330854	50.72
Segmen 2	547.36	18.63	38.01	0.021923	0.045	0.490134	3.047692686	56.77851474	50.72
Segmen 2	547.36	17.88	37.55	0.021923	0.045	0.476165	2.989506931	53.45238393	50.72
Segmen 2	547.36	17.73	37.46	0.021923	0.045	0.473305	2.977523224	52.79148677	50.72
Segmen 2	547.36	12.22	15.66	0.021923	0.045	0.780332	4.155412559	50.77914147	50.72

0

90.576

7

Location	Elevation
2.69	95
1.82	94
1.92	93
2.11	92
2.21	91
54.17	90
2.75	90
2.79	91
4.05	92
4.05	93
3.79	94
	95

Surface	L (ft)	a (ft^2)	Pw (ft)	s	n	r (ft)	V (ft/s)	Q=VA	Qactual
Segmen 2	547.36	13.7	55.08	0.021923	0.045	0.248729	1.939005048	26.56436915	50.72
Segmen 2	547.36	27.71	56.85	0.021923	0.045	0.487423	3.036443611	84.13985247	50.72
Segmen 2	547.36	20.66	56.18	0.021923	0.045	0.367747	2.516480508	51.99048729	50.72
Segmen 2	547.36	20.38	56.15	0.021923	0.045	0.362956	2.494580148	50.83954342	50.72
Segmen 2	547.36	20.32	56.14	0.021923	0.045	0.361952	2.489977252	50.59633776	50.72
Segmen 2	547.36	20.32	56.14	0.021923	0.045	0.361952	2.489977252	50.59633776	50.72

90.369

8

Location	Elevation
3.45	94
3.08	93
2.73	92
2.11	91
26.39	90
3.16	90
7.16	91
3	92
3	93
3	94
3	95
3	96
2.92	97
	98

Surface	L (ft)	a (ft^2)	Pw (ft)	s	n	r (ft)	V (ft/s)	Q=VA	Qactual
Segmen 2	547.36	29.025	32.04	0.021923	0.045	0.905899	4.590017379	133.2252544	50.72
Segmen 2	547.36	19.76	30.34	0.021923	0.045	0.651285	3.683625113	72.78843223	50.72
Segmen 2	547.36	13.85	29.21	0.021923	0.045	0.474153	2.981077913	41.2879291	50.72
Segmen 2	547.36	16.78	29.78	0.021923	0.045	0.563465	3.344562823	56.12176417	50.72
Segmen 2	547.36	15.75	29.58	0.021923	0.045	0.532454	3.220693832	50.72592785	50.72
Segmen 2	547.36	15.75	29.58	0.021923	0.045	0.532454	3.220693832	50.72592785	50.72

90.565

Elev
95.825

h	A	losses	g	Q
5.825	0.883575	4.31	32.2	8.243197

h	L	Q
0.325	100	44.46684

52.71004

Elev
96.435

h	A	losses	g	Q
6.435	0.883575	4.31	32.2	8.664071

h	L	Q
1.435	10.2	42.08131

50.74538

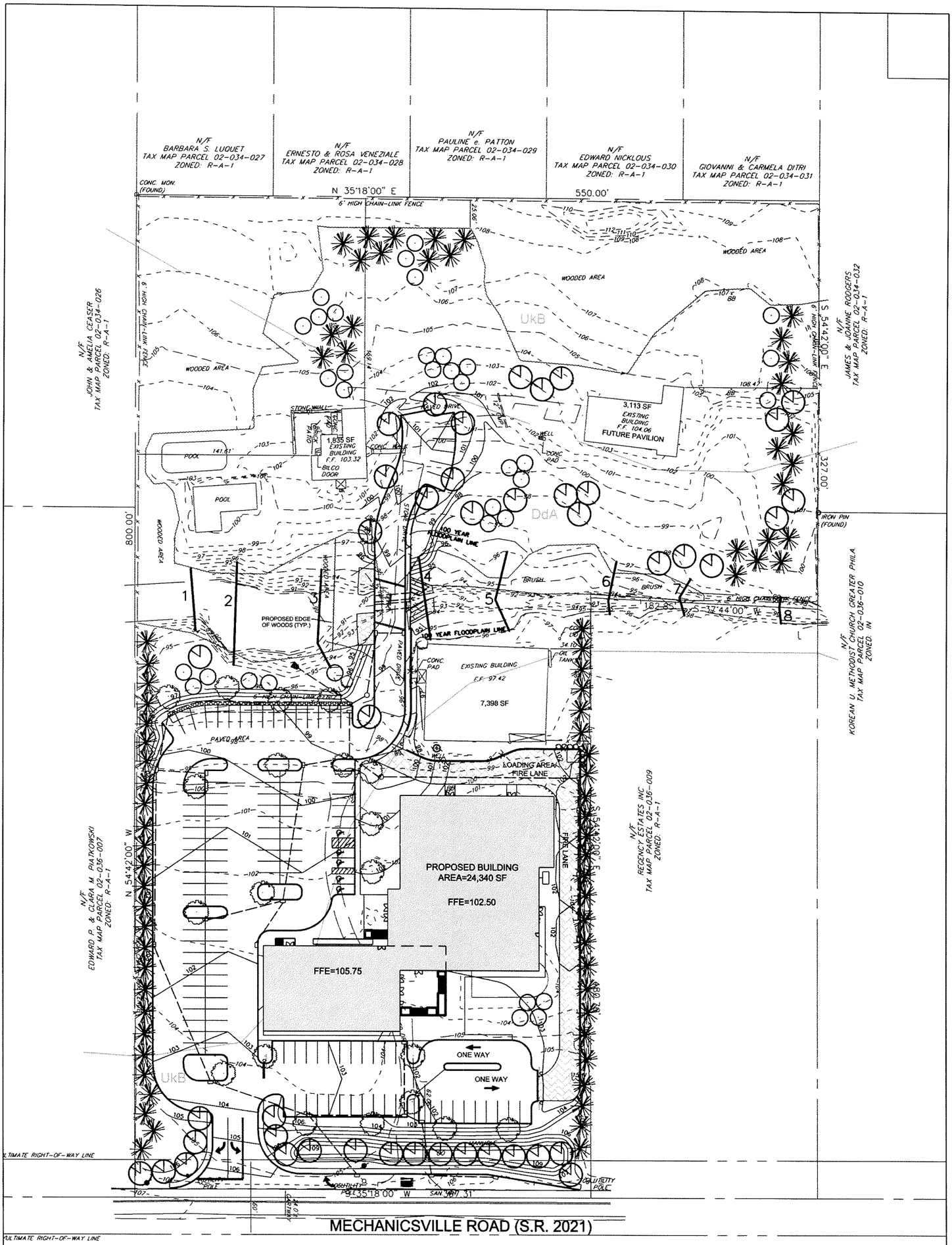

FLOODPLAIN ANALYSIS MAP

SAMARPAN HINDU TEMPLE

BENSALEM TOWNSHIP BUCKS COUNTY

PLAN DATE:	REVISION #	REVISED	REVISION
4/12/16			
JOB #			
5447			
SCALE:			
1" = 80'			

80 0 40 80

DUMACK ENGINEERING
A PROFESSIONAL CORPORATION
CIVIL - STRUCTURAL ENGINEERS & SURVEYORS
ESTABLISHED IN 1981
PENNSYLVANIA OFFICE
ROTTERDAM OFFICE
P.O. BOX 487
ROTTERDAM, PA 19468
PHONE: (215) 968-3881
FAX: (215) 968-9448
NEW JERSEY OFFICE
P.O. BOX 487
ROTTERDAM, PA 19468
PHONE: (215) 968-3881
FAX: (215) 968-9448
www.Dumack.com

SAMARPAN HINDU TEMPLE

BENSALEM TOWNSHIP, BUCKS COUNTY, PENNSYLVANIA

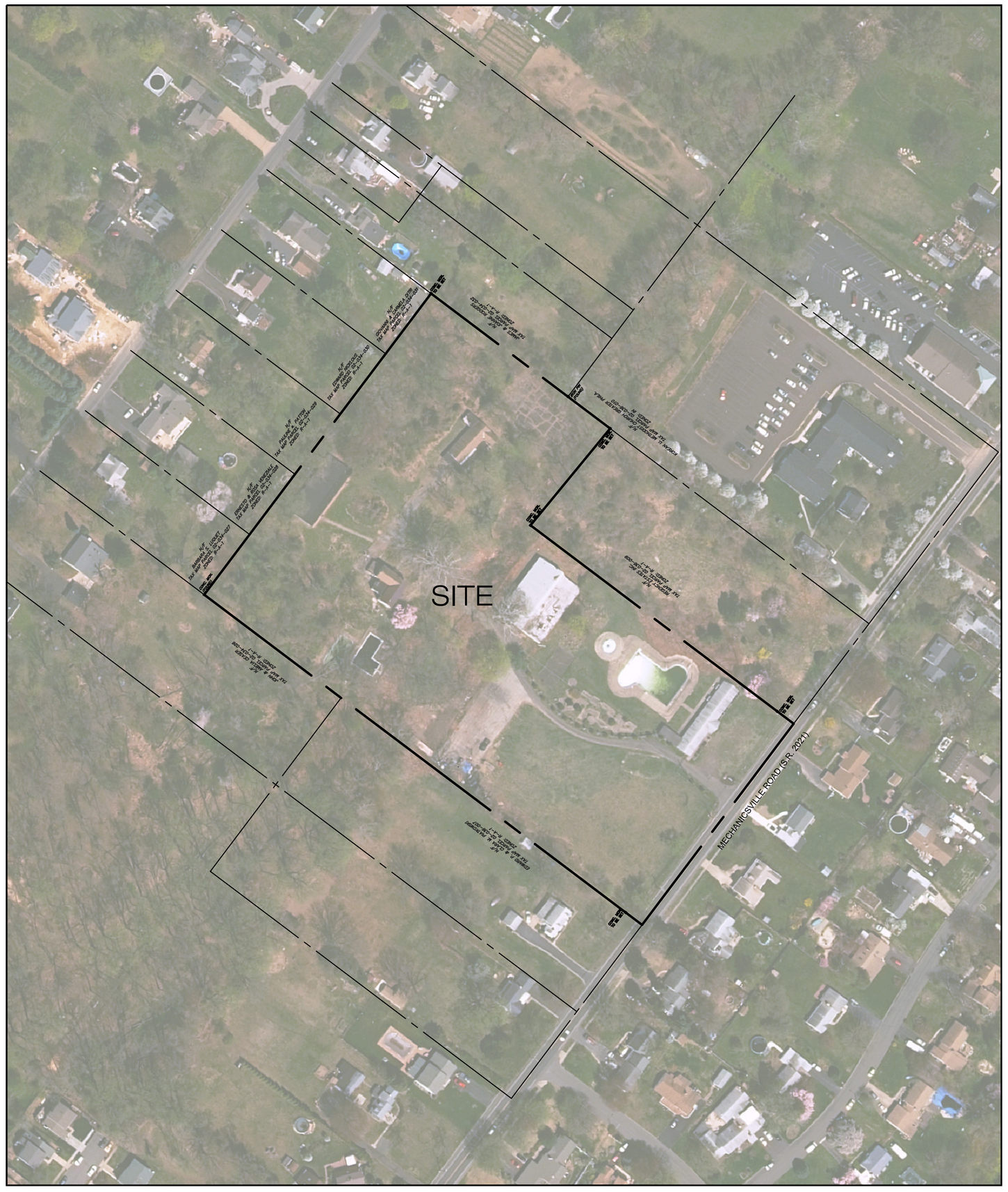

AERIAL / LOCATION MAP
SCALE : 1"= 800'

NORTH

OWNER(S) OF RECORD

SAMARPAN HINDU TEMPLE
2746 MECHANICSVILLE ROAD
BENSALEM, PA 19020
T.M.P. # 02-036-008

INDEX OF DRAWINGS

No.	DESCRIPTION
1.	TITLE SHEET
2.	RECORD PLAN
3.	EXISTING FEAURES & DEMOLITION PLAN
4.	NATURAL RESOURCES PROTECTION PLAN
5.	POST CONSTRUCTION STORMWATER MANAGEMENT PLAN
6.	DRAINAGE & UTILITY PLAN
7.	EROSION & CONTROL PLAN
8.	EROSION & CONTROL NOTES & DETAILS
9.	EROSION & CONTROL DETAILS
10.	LANDSCAPE PLAN
11.	LANDSCAPE DETAILS
12.	LIGHTING PLAN
13.	UTILITY PROFILES
14.	CONSTRUCTION DETAILS
15.	CONSTRUCTION DETAILS
16.	CONSTRUCTION DETAILS
17.	TRUCK TURNING TEMPLATE

Utility Users List

Verizon
1350 Welsh Road
Suite 100
North Wales, PA 19454

AT&T – ATLANTA
500 N Point Parkway
Alpharetta, GA 30005

Bensalem Township
2400 Byberry Road
Bensalem, PA 19020

PECO Energy
400 Park Avenue
Warminster, PA 18974

Aqua America, Inc.
762 W. Lancaster Avenue
Bryn Mawr, PA 19010

Bucks County Water & Sewer Authority
1275 Almshouse Road
Warrington, PA 18976

Comcast Cable Communications, Inc.
1750 Byberry Road
Bensalem, PA 19020

Level 3 Communications, LLC
Attn: Network Relocations Dept.
1025 El Dorado Boulevard
Broomfield, CO 80021

"The Applicant/Designer/Contractor shall comply with the requirements of P.L. 852, No. 287, December 10, 1974 as amended by Act 187 of December 1996, as amended by Act 199 of November 30, 2004, as amended by Act 121 of 2008".

All underground utilities are to be considered approximate only and are to be verified in the field by the appropriate utility company.

Additional underground utilities may exist on or adjacent to this site other than shown on this plan. Location of such has not been determined.

Pennsylvania One Call System contacted (1-800-242-1776) and assigned serial number 2016-2450730 to this site.

SERIAL NO. 2016-2450730
CALL BEFORE YOU DIG!
PENNSYLVANIA LAW REQUIRES 3 WORKING DAYS NOTICE FOR CONSTRUCTION PHASE AND 10 WORKING DAYS IN DESIGN STAGE-STOP CALL
PENNSYLVANIA ONE CALL SYSTEM, INC.
1-800-242-1776

INFORMATION SHOWN ON THIS PLAN IS THE RESULT OF A PROFESSIONAL SERVICE RENDERED BY AND IS OWNED BY DUMACK ENGINEERING. ANY REPRODUCTION OF THIS PLAN WITHOUT APPROVAL OF DUMACK ENGINEERING IS NOT PERMITTED. ACCEPTANCE OF THIS PLAN BY ANY PERSON, FIRM OR CORPORATION FOR THE PURPOSE OF CREATING ADDITIONAL COPIES OR REVISING SAID PLAN FOR USE ON ANY OTHER PROJECT IS EXPRESSLY PROHIBITED. ANY USE OF THIS RESTRICTION SHALL BE CONSIDERED A VIOLATION OF BOTH CORPORATE ASSETS, BOTH OF WHICH SHALL BE PROSECUTED TO THE FULLEST EXTENT OF THE LAW.
THIS PLAN HAS BEEN SPECIFICALLY PREPARED FOR THE OWNER OR DEVELOPER AT THIS TIME AND IT IS NOT TRANSFERABLE TO ANY OTHER USE WITHOUT THE WRITTEN CONSENT OF DUMACK ENGINEERING. DUMACK ENGINEERING MAKES NO REPRESENTATION FOR ANY PURPOSE OTHER THAN THAT WHICH IT IS INTENDED SHALL BE ASSUMED BY ANY OTHER PERSON, FIRM OR CORPORATION USING THIS PLAN IN WHOLE OR IN PART, SOLE DISCRETION AND LIABILITY OF THE APPLICABLE PARTY.
THIS PROJECT HAS BEEN PREPARED FOR MUNICIPAL PURPOSES. ADDITIONAL INFORMATION MAY BE REQUIRED FOR CONSTRUCTION.
ALL DISCREPANCIES SHALL BE REPORTED TO DUMACK ENGINEERING. OWNER MUST BE NOTIFIED OF ANY DISCREPANCIES BEFORE PROCEEDING WITH THE WORK.
© - 2013, DUMACK ENGINEERING - ALL RIGHTS RESERVED

NOT VALID WITHOUT AN EMBOSSED SEAL OR SIGNATURE IN RED INK.

HEATH ALAN DUMACK, P.E. & P.L.S.
PRINCIPAL - REGISTERED
PA P.E. LICENSE No. SU-054500-E

DUMACK ENGINEERING
ESTABLISHED IN 1984
A PROFESSIONAL CORPORATION
CIVIL - STRUCTURAL ENGINEERS & SURVEYORS
PENNS PARK OFFICE
677 DURHAM ROAD
P.O. BOX 487
PENNS PARK, PA 18943
PHONE: (215) 598-1230
FAX: (215) 598-1232
ROYERSFORD OFFICE
P.O. BOX 809
ROYERSFORD, PA 19468
PHONE: (610) 489-4949
FAX: (610) 489-8449
www.Dumack.com

REV. No.	DATE	REVISION
1		
2		
3		
4		
5		
6		
7		
8		
9		
10		
11		
12		
13		
14		
15		
16		
17		
18		
19		
20		

PRELIMINARY AS FINAL
NOT FOR RECORDING

EXISTING PARCEL INFO:
T.M.P. No. 02-036-008
DEED BOOK: 2587 PAGE No. 1053
CURRENT ZONING: R-A-1

OWNER of RECORD:
SAMARPAN HINDU TEMPLE
2746 MECHANICSVILLE ROAD
BENSALEM, PA 19020

APPLICANT:
SAME AS ABOVE

0
GRAPHIC SCALE

TITLE SHEET
2746 MECHANICSVILLE ROAD
BENSALEM TOWNSHIP
BUCKS COUNTY, PA

DRAWN BY:	CHECKED BY:
A.E.Y.	H.A.D.
SCALE: AS SHOWN	PROJECT No: 5447
PLAN DATE: OCT. 5, 2016	SHEET No: 1 of 17

I, WE ______ HAVE LAID OUT UPON OUR LAND SITUATED IN THE TOWNSHIP OF BENSALEM, COUNTY OF BUCKS, COMMONWEALTH OF PENNSYLVANIA, LAND SUBDIVISION ACCORDING TO THIS PLAN WHICH IS INTENDED TO BE RECORDED.
WITNESS OUR HAND AND SEAL THIS ______ DAY OF ______ 20 ____.

ON THE ______ DAY OF ______ 20 ____, BEFORE ME THE SUBSCRIBER, A NOTARY PUBLIC OF THE COMMONWEALTH OF PENNSYLVANIA

PERSONALLY APPEARED ______ WHO ACKNOWLEDGED THIS PLAN TO BE THE OFFICIAL PLAN OF PROPERTY SHOWN THEREON, SITUATED IN THE TOWNSHIP OF BENSALEM, COUNTY OF BUCKS, COMMONWEALTH OF PENNSYLVANIA, AND DESIRED THAT THIS PLAN BE RECORDED ACCORDING TO LAW.

NOTARY PUBLIC (SEAL)

APPROVED BY THE BENSALEM TOWNSHIP PLANNING COMMISSION

______ 20 ____.

REVIEWED BY THE BENSALEM TOWNSHIP ENGINEER ON THIS ______ DAY OF ______ 20 ____.

APPROVED BY RESOLUTION OF THE BENSALEM TOWNSHIP COUNCIL BUCKS COUNTY, PENNSYLVANIA, AT A MEETING HELD ON THE ______ DAY OF ______ 20 ____

BCPC No. ______

PROCESSED AND REVIEWED: REPORT PREPARED BY BUCKS COUNTY PLANNING COMMISSION IN ACCORDANCE WITH THE MUNICIPALITIES PLANNING CODE.

CERTIFIED THIS DATE ______

EXECUTIVE DIRECTOR
BUCKS COUNTY PLANNING COMMISSION

RECORDED BY THE RECORDER OF DEEDS THIS DATE ______

RECORDED IN PLAN BOOK ______ PAGE No. ______

ZONED: R-A-1, RESIDENTIAL DISTRICT

REQUIREMENT	SECTION	REQUIRED	EXISTING	PROPOSED
MINIMUM LOT AREA	232-125.(a)	20,000 SF	341,859 SF	341,859 SF
MINIMUM LOT FRONTAGE	232-125.(b)	80 FT.	367.31 FT.	367.31 FT.
MINIMUM FRONT YARD	232-125.(e)(1).a	35 FT.	62.06 FT.	103.00 FT.
MINIMUM SIDE YARD	232-125.(e)(2).a	12 FT./30 AGG.	15.11 FT./156.72 FT.	29.47 FT./133.14 FT.
MINIMUM REAR YARD	232-125.(e)(3).a	30 FT.	25.06 FT.*	169.14 FT.
MAXIMUM IMPERVIOUS SURFACE RATIO	232-125.(d)	35%	23.68%	33.9%
MAXIMUM BUILDING COVERAGE	232-125.(c)	30%	5.85%	10%
MAXIMUM BUILDING HEIGHT	232-125.(f)	35 FT.	< 35 FT.	< 35 FT.

* INDICATES AN EXISTING NON-CONFORMITY

PARKING REQUIREMENTS

DESCRIPTION	SECTION	
CHURCH ONE (1) OFF STREET PARKING SPACE EACH FOUR SEATS PROVIDED FOR PATRON USE, OR AT LEAST ONE (1) OF-STREET PARKING SPACE FOR EACH 40 SQUARE FEE OF GROSS FLOOR AREA INTENDED TO BE USED FOR SERVICE OF PATRONS GUEST OR MEMBERS, WHICHEVER REQUIRES THE GREATER NUMBER OF OFF-STREET PARKING SPACES, PLUS ONE (1) ADDITIONAL SPACE OR EACH FULL-TIME EMPLOYEE	232-586.(c)(3)	4,000* SF/40 + 10 EMPLOYEES = 110 SPACES
COMMUNITY FACILITY ONE (1) OFF STREET PARKING SPACE EACH 200 SQUARE FEE OF GROSS FLOOR AREA INTENDED TO BE USED FOR SERVICE TO PATRONS, GUEST OR MEMBERS, PLUS ONE (1) ADDITIONAL SPACE OR EACH FULL-TIME EMPLOYEE *REMAINING BUILDING SQUARE FOOTAGE USAGE IS CONCURRENT WITH USES LISTED ABOVE THEREFORE NO ADDITIONAL PARKING WOULD BE REQUIRED.	232-586.(c)(3)	4,000* SF/200 = 20 SPACES
TOTAL PROPOSED PARKING SPACES REGULAR PARKING SPACES 126 HANDICAP SPACES 5 TOTAL PARKING SPACES 131		TOTAL REQUIRED PARKING SPACES=130

THE FOLLOWING VARIANCES FROM THE BENSALEM TOWNSHIP ZONING ORDINANCE WERE PREVIOUSLY GRANTED:

SECTION	VARIANCE
232-58	TO PERMIT A FLOODPLAIN DISTURBANCE OF 34% INSTEAD OF THE ALLOWABLE 0%.
232-59(a)(2)a.1	TO ALLOW A STEEP SLOPE DISTURBANCE OF 50% FOR THE 8-15% SLOPES INSTEAD OF THE ALLOWABLE 40%.
232-59(a)(2)a.2	TO ALLOW A STEEP SLOPE DISTURBANCE OF 35% FOR THE 15-25% SLOPES INSTEAD OF THE ALLOWABLE 30%.

THE FOLLOWING VARIANCE FROM THE BENSALEM TOWNSHIP ZONING ORDINANCE WAS PREVIOUSLY GRANTED ON JANUARY 9, 2014:

SECTION	VARIANCE
232-124	TO PERMIT THE USE OF CHURCH.

THE FOLLOWING WAIVERS FROM THE BENSALEM TOWNSHIP SUBDIVISION LAND DEVELOPMENT ORDINANCE ARE REQUESTED:

SECTION	WAIVER
201-41.(d)(9)	PARTIAL WAIVER TO SHOW AN AERIAL PHOTOGRAPH IN-LIEU OF NOT NOT SHOWING ALL EXISTING SEWER LINES, WATER LINES, FIRE HYDRANTS, UTILITY TRANSMISSION LINES, CULVERTS, BRIDGES, RAILROADS, OR OTHER MANMADE FEATURES WITHIN THE PROPOSED SUBDIVISION AND/OR LAND DEVELOPMENT AND WITH 400 FEET OF THE BOUNDARY OF THE PROPOSED SUBDIVISION AND/OR LAND DEVELOPMENT.
196-61.(b)(1)	TO PERMIT THE INSTALLATION OF HIGH DENSITY POLYETHYLENE PIPE (HDPE) IN-LIEU OF REINFORCED CONCRETE PIPE (RCP) FOR ALL STORM SEWERS.

IMPERVIOUS SURFACE CALCULATION

SURFACE	EXISTING	PROPOSED
EXISTING BUILDINGS	19,412 SF	12,346 SF
EXISTING SHED	578 SF	--
EXISTING ASPHALT DRIVE/AREAS	36,373 SF	--
EXISTING STONE DRIVE	1,568 SF	--
EXISTING CONCRETE WALKS/PADS	15,252 SF	313 SF
EXISTING BRICK PATIO	241 SF	241 SF
EXISTING POOLS	7,206 SF	--
EXISTING WALLS	322 SF	148 SF
PROPOSED BUILDING	--	24,340 SF
PROPOSED WALKWAYS	--	9,218 SF
PROPOSED ASPHALT PARKING LOT	--	68,762 SF
PROPOSED RETAINING WALL	--	499 SF
TOTAL	80,952 SF 23.68%	115,867 SF 33.9%

Natural Resources Disturbance Inventory

NATURAL RESOURCE	% OF RESOURCE TO BE PROTECTED	% OF RESOURCE PERMITTED TO BE DISTURBED	TOTAL AREA OF NATURAL RESOURCE (AC.)	TOTAL AREA OF REQUIRED RESOURCE PROTECTION (AC.)	ACTUAL AREA OF RESOURCE PROTECTED (AC.)	ACTUAL AREA OF RESOURCE PROTECTED (%)	ACTUAL AREA OF RESOURCE DISTURBED (AC.)	ACTUAL AREA OF RESOURCE DISTURBED (%)
FLOODPLAINS	100%	0%	0.545	0.545	0.359	66%	0.186	34%
WETLANDS	100%	0%	0.000	0.000	0.000	0%	0.000	0%
WETLAND BUFFER	80%	20%	0.000	0.000	0.000	0%	0.000	0%
STEEP SLOPES:								
8%-15%	60%	40%	0.790	0.474	0.395	50%	0.395	50%
15%-25%	70%	30%	0.267	0.187	0.174	65%	0.094	35%
25% OR MORE	85%	15%	0.272	0.231	0.231	85%	0.041	15%
WOODLANDS:								
ENVIRONMENTALLY SENSITIVE	80%	20%	0.831	0.396	0.759	91%	0.072	9%
ALL OTHERS	50%	50%	0.895	0.448	0.895	100%	0.000	0%

*Natural resource chart treats each resource irrespective of other resources, the site capacity calculations utilize the resource with the highest protection ratio in the case of overlap

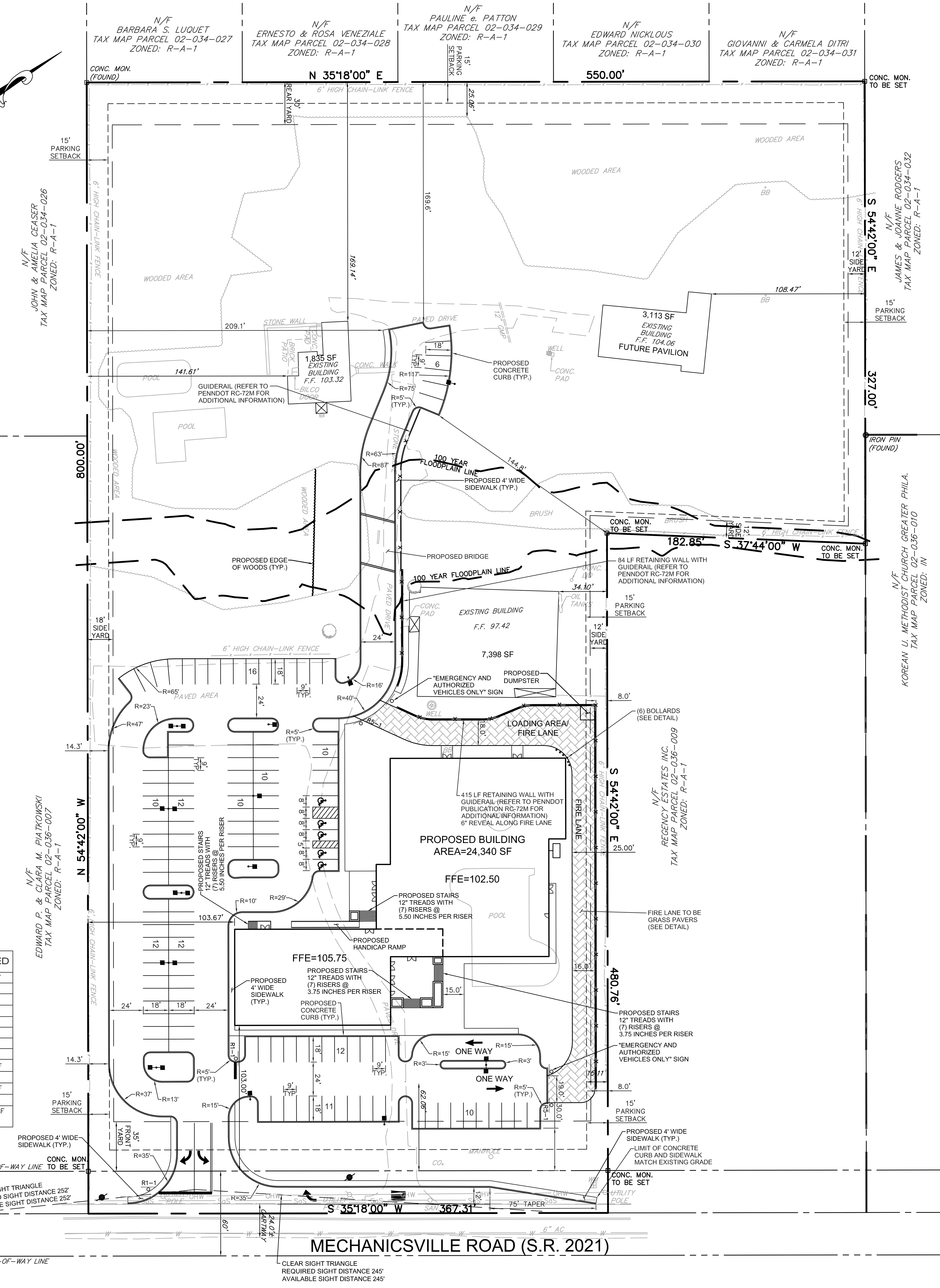

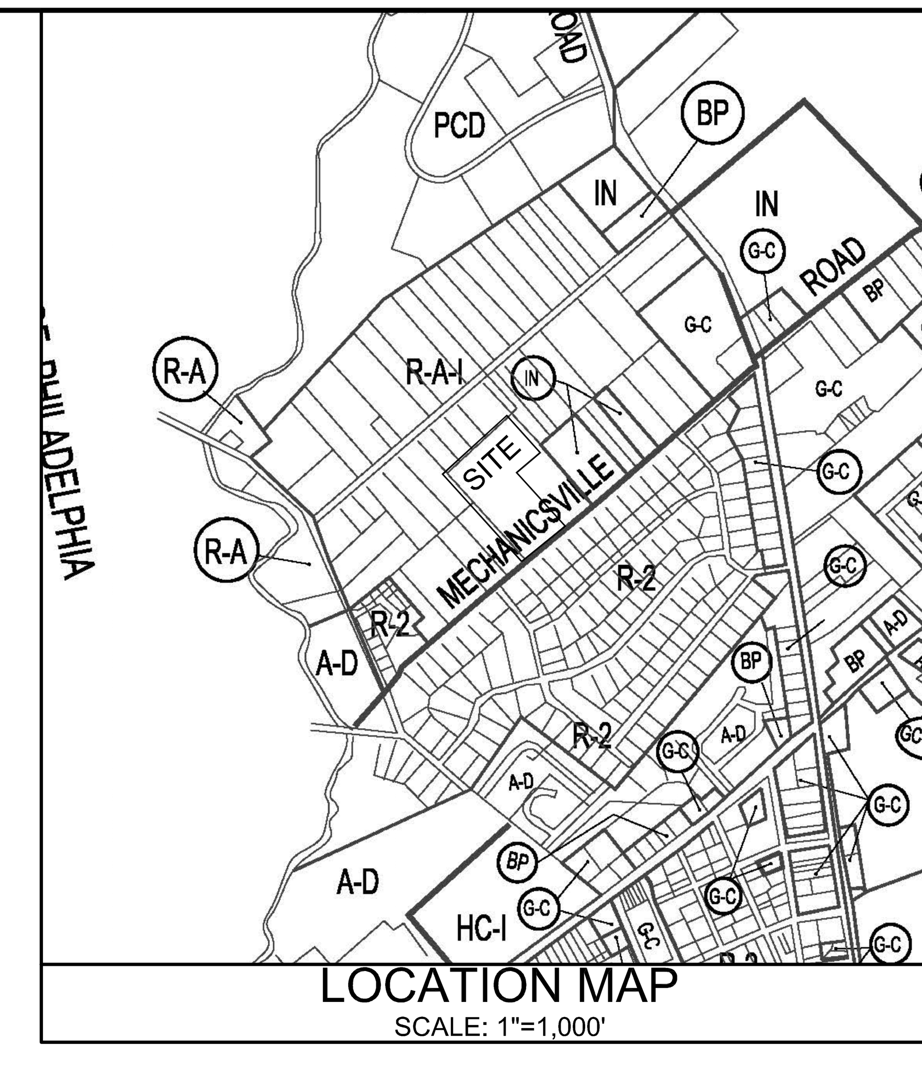

LOCATION MAP
SCALE: 1"=1,000'

Record Plan Notes

1. THIS PLAN WAS PREPARED WITHOUT THE BENEFIT OF A TITLE REPORT.
2. TOPOGRAPHY AND ELEVATION INFORMATION IS BASED ON NORTH AMERICAN DATUM 1988 (NAD88).
3. THESE LAND DEVELOPMENT PLANS HAVE BEEN PREPARED IN CONJUNCTION WITH THE BENSALEM TOWNSHIP SUBDIVISION AND LAND DEVELOPMENT ORDINANCE, AS AMENDED, AND THE BENSALEM TOWNSHIP ZONING ORDINANCE, AS AMENDED.
4. PROPERTY CONSISTS OF THE CONSTRUCTION OF A PROPOSED CHURCH, ASSOCIATED PARKING, AND AMENITIES.
5. THE AREA BETWEEN THE OVERALL TRACT LINES AND THE ULTIMATE RIGHT-OF-WAY LINES ARE OFFERED FOR DEDICATION TO THE AGENCY HAVING JURISDICTION AT THE TIME OF DEDICATION.
6. THIS PLAN IS SUBJECT TO ANY AND ALL RIGHTS-OF-WAY, EASEMENTS AND COVENANTS OF RECORD.
7. CURB CUTS AND HANDICAP RAMPS SIDEWALKS FOR WHEEL CHAIR ACCESS SHALL BE PROVIDED AS SHOWN ON THE PLANS, AND SHALL BE CONSTRUCTED IN ACCORDANCE WITH THE LATEST ADA (AMERICANS WITH DISABILITIES ACT) STANDARDS.
8. MONUMENTS SHALL BE PLACED IN THE GROUND AT A TIME SPECIFIED BY THE TOWNSHIP ENGINEER AFTER FINAL GRADING IS COMPLETED. ANY MONUMENT OR IRON PIN DISTURBED DURING CONSTRUCTION SHALL BE RESET UPON THE COMPLETION OF CONSTRUCTION.
9. THE LOCATION OF EXISTING UNDERGROUND UTILITIES CONTAINED ON THESE PLANS HAVE BEEN OBTAINED BY FIELD SURVEY. COMPLETENESS OR ACCURACY OF THE LOCATION OF UTILITIES CANNOT BE GUARANTEED. THE CONTRACTOR SHALL VERIFY ALL EXISTING SITE CONDITIONS, SURFACE AND SUBSURFACE, AND SHALL NOTIFY THE ENGINEER IN THE EVENT OF DISCREPANCIES. IT IS THE CONTRACTOR'S RESPONSIBILITY TO NOTIFY UNDERGROUND UTILITY USERS FOR COMPLIANCE WITH PENNSYLVANIA ACT 2008-121. PENNSYLVANIA ONE-CALL SYSTEM SERIAL NUMBER 2016-2450730 HAS BEEN OBTAINED FOR DESIGN PURPOSES ONLY.
10. ALL CONTRACTORS WORKING ON THIS PROJECT SHALL BE RESPONSIBLE FOR INSURING THAT ALL CONSTRUCTION ACTIVITIES RELATED TO THIS PROJECT ARE PERFORMED IN ACCORDANCE WITH ALL APPLICABLE OSHA (OCCUPATIONAL SAFETY AND HEALTH ADMINISTRATION) STANDARDS.
11. ALL PROPOSED UTILITIES SHALL BE UNDERGROUND.
12. THIS PROJECT SHALL BE SERVED BY PUBLIC WATER AND SEWERS.
13. DURING CONSTRUCTION, THE PROPERTY OWNER SHALL BE RESPONSIBLE TO RESTORE ANY PAVING, CURBING, ETC... THAT IS DISTURBED DURING REPAIR AND/OR MAINTENANCE OF ANY UTILITIES.
14. ALL PROPOSED SIGNAGE SHALL BE IN ACCORDANCE WITH BENSALEM TOWNSHIP ZONING ORDINANCE, LATEST EDITION AS AMENDED, AND THE MANUAL ON UNIFORM TRAFFIC CONTROL DEVICES, LATEST EDITION AS AMENDED. APPROPRIATE PERMITS MUST BE OBTAINED FROM THE DEPARTMENT OF LICENSES AND INSPECTIONS.
15. ALL CURB RADII TO BE 5 FT. UNLESS OTHERWISE NOTED ON THE PLANS.
16. NO HAZARDOUS MATERIALS SHALL BE ON SITE.
17. NO NOXIOUS ENVIRONMENTAL EFFECT SHALL BE GENERATED ON SITE.
18. NO OFFENSIVE ODORS OR GLARES SHALL BE GENERATED ON SITE.
19. NO USE SHALL BE PERMITTED THAT WOULD BE NOXIOUS OR OFFENSIVE TO THE IMMEDIATE SURROUNDING AREA BY REASON OF SMOKE, GAS, VIBRATION, NOISE OR WHICH CONSTITUTES A PUBLIC HAZARD BY FIRE, EXPLOSION OR OTHERWISE.
20. ALL TREE PROTECTION FENCING SHALL BE INSPECTED BY THE TOWNSHIP PRIOR TO INITIATION OF ANY CONSTRUCTION.
21. NO PORTION OF THE SITE IS LOCATED WITHIN THE 100-YEAR FLOODPLAIN AS DEPICTED ON THE FEDERAL FLOOD INSURANCE RATE MAPS FOR BUCKS COUNTY, PENNSYLVANIA, MAP NO. 42017C0502J, EFFECTIVE DATE MARCH 16, 2015.
22. ALL EXISTING PAVEMENT TO REMAIN ON-SITE SHALL BE PATCHED AS NEEDED AND A WEARING COURSE OVERLAY SHALL BE APPLIED.
23. TRAFFIC CONTROL SIGNS MUST BE POSTED ON PENNDOT APPROVED BREAKAWAY POSTS IN ACCORDANCE WITH THE MOST RECENT VERSION OF THE TC-8700 SERIES IN PENNDOT PUBLICATION 111M.
24. ALL TRAFFIC CONTROL SIGNS SHALL BE POSTED IN ACCORDANCE WITH THE 2009 MUTCD AND THE MOST RECENT VERSION OF PENNDOT PUBLICATION 236M, "HANDBOOK OF APPROVED SIGNS".

Legend

Tract Boundary Line	
Legal Right-of-Way	
Existing Sanitary Sewer	SaS
Existing Water Main	W
Existing Storm Sewer	
Existing Gas Main	G
Existing Electric	E
Existing Telephone	T
Existing Treeline	
Proposed Curb	
Existing Utility Pole	
Existing Valve	

SERIAL NO. 2016-2450730
CALL BEFORE YOU DIG!
PENNSYLVANIA LAW REQUIRES 3 WORKING DAYS NOTICE FOR CONSTRUCTION PHASE AND 10 WORKING DAYS IN DESIGN STAGE-STOP CALL
PENNSYLVANIA ONE CALL SYSTEM, INC.
1-800-242-1776

INFORMATION SHOWN ON THIS PLAN IS THE RESULT OF A PROFESSIONAL SERVICE RENDERED BY AND IS OWNED BY DUMACK ENGINEERING. REPRODUCTION OF THIS PLAN WITHOUT APPROVAL OF DUMACK ENGINEERING IS NOT PERMITTED. THE REPRODUCTION OF A COPY OF THIS PLAN FOR THE PURPOSE OF CREATING ADDITIONAL COPIES OR REVISING SAID PLAN SHALL, IN NO CIRCUMSTANCE, BE APPROVED. VIOLATION OF THIS RESTRICTION SHALL BE CONSIDERED A VIOLATION OF BOTH THE PROFESSIONAL CODE OF ETHICS AND A THEFT OF CORPORATE ASSETS, BOTH OF WHICH SHALL BE PROSECUTED TO THE FULLEST EXTENT OF CURRENT STATUTES.
THIS PLAN HAS BEEN SPECIFICALLY PREPARED FOR THE OWNER DESIGNATED HEREON, ANY MODIFICATION, REVISION, DUPLICATION OR USE WITHOUT THE WRITTEN CONSENT OF DUMACK ENGINEERING IS PROHIBITED. RELIANCE ON THIS PLAN FOR ANY PURPOSE OTHER THAN THAT WHICH IT IS INTENDED SHALL BE AT THE SOLE DISCRETION AND LIABILITY OF THE APPLICABLE PARTY.
THIS PROJECT HAS BEEN PREPARED FOR MUNICIPAL PURPOSES. ADDITIONAL INFORMATION MAY BE REQUIRED FOR CONSTRUCTION.
ALL DIMENSIONS MUST BE VERIFIED BY CONTRACTOR AND OWNER MUST BE NOTIFIED OF ANY DISCREPANCIES BEFORE PROCEEDING WITH THE WORK.
© - 2013, DUMACK ENGINEERING - ALL RIGHTS RESERVED

NOT VALID WITHOUT AN EMBOSSED SEAL OR SIGNATURE IN RED INK.

COMMONWEALTH OF PENNSYLVANIA — REGISTERED PROFESSIONAL — HEATH ALAN DUMACK — ENGINEER PE-051685-E

HEATH A. DUMACK, P.E. & P.L.S.
PA P.E. LICENSE No. PE-051685-E
PA P.L.S. LICENSE No. SU-054500-E

DUMACK ENGINEERING
A PROFESSIONAL CORPORATION
ESTABLISHED IN 1964
CIVIL - STRUCTURAL ENGINEERS & SURVEYORS
PENNS PARK OFFICE
677 DURHAM ROAD
P.O. BOX 487
PENNS PARK, PA 18943
PHONE: (215) 598-1230
FAX: (215) 598-1232
ROYERSFORD OFFICE
P.O. BOX 809
ROYERSFORD, PA 19468
PHONE:(610) 489-9449
FAX: (610) 489-9449
www.Dumack.com

REV. No.	DATE	REVISION
1		
2		
3		
4		
5		
6		
7		
8		
9		
10		
11		
12		
13		
14		
15		
16		
17		
18		
19		
20		

PRELIMINARY AS FINAL
NOT FOR RECORDING

EXISTING PARCEL INFO:
T.M.P. No. 02-036-008
DEED BOOK: 2587 PAGE No. 1053
CURRENT ZONING: RA-1

OWNER of RECORD:
SAMARPAN HINDU TEMPLE
2746 MECHANICSVILLE ROAD
BENSALEM, PA 19020

APPLICANT:
SAME AS ABOVE

GRAPHIC SCALE 40 0 20 40

RECORD PLAN
2746 MECHANICSVILLE ROAD
BENSALEM TOWNSHIP
BUCKS COUNTY, PA

DRAWN BY: A.E.Y.
CHECKED BY: H.A.D.
SCALE: 1"=40'
PROJECT No: 5447
PLAN DATE: OCT. 5, 2016
SHEET No. 2 of 17

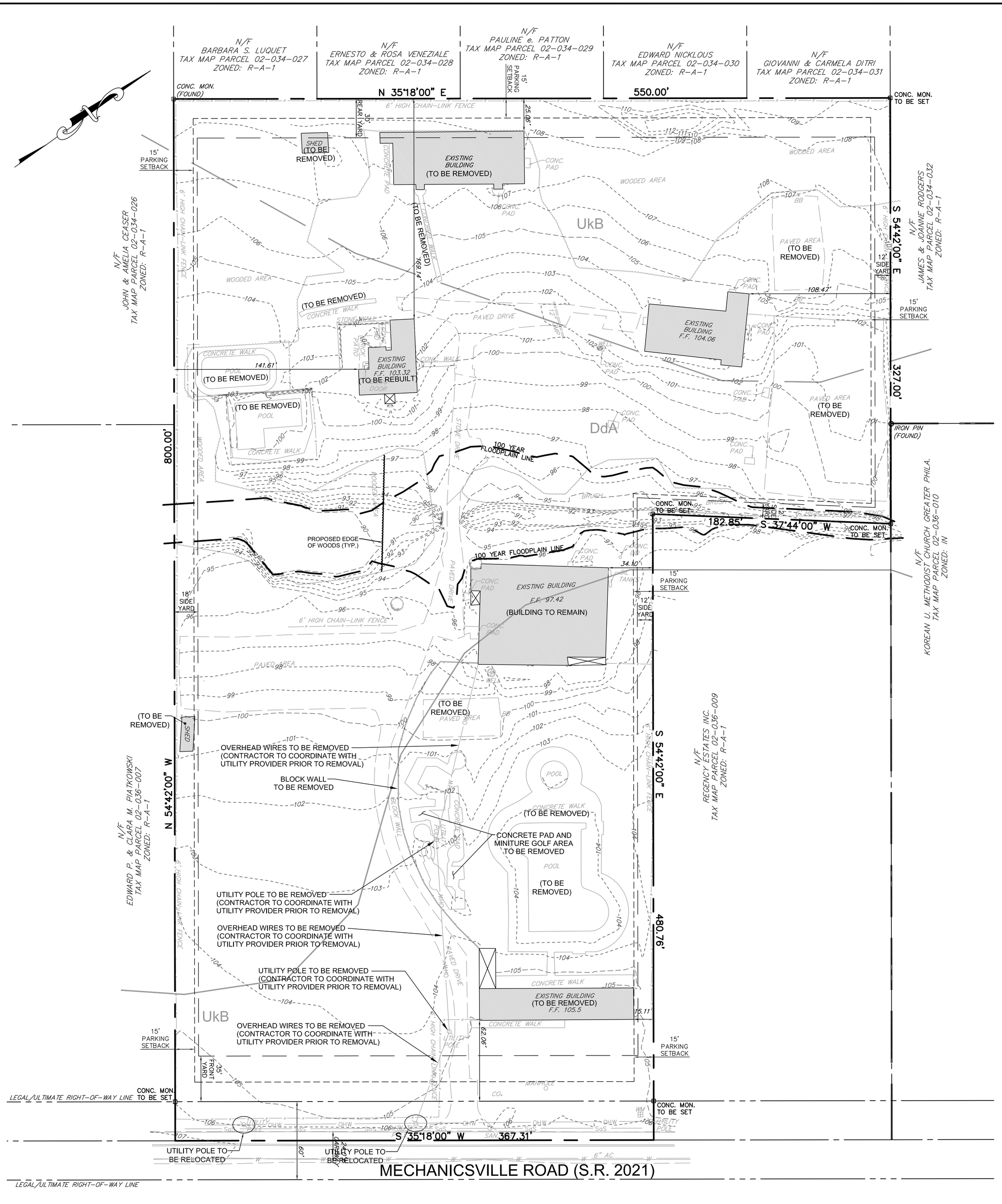

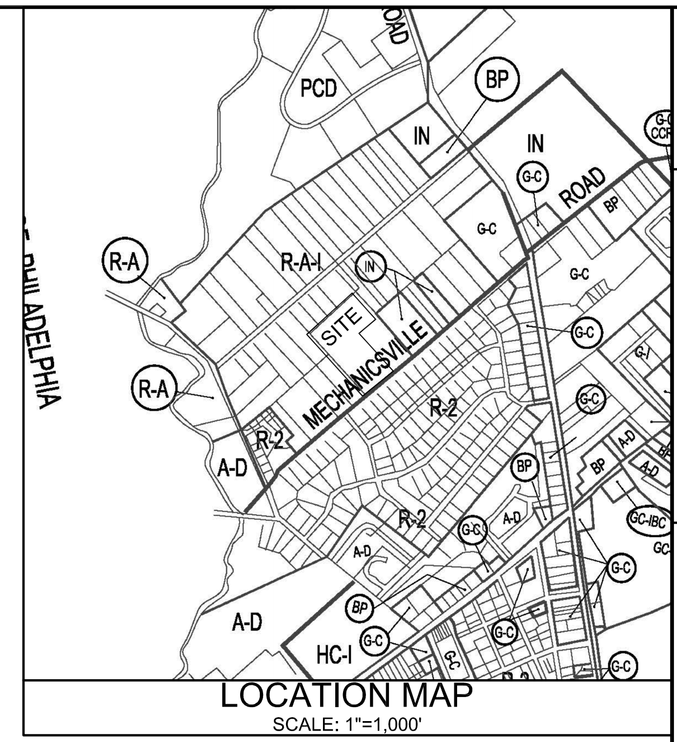

GENERAL NOTES:

1. PLAN WAS PREPARED WITHOUT THE BENEFIT OF A TITLE REPORT.
2. LOCATION OF UNDERGROUND UTILITIES AND INFORMATION SHOWN OBTAINED BY FIELD LOCATIONS AND THE PENNSYLVANIA ONE CALL SYSTEM. LOCATIONS ARE ONLY APPROXIMATE.
3. NO PORTION OF THE SITE IS LOCATED WITHIN THE 100-YEAR FLOODPLAIN BOUNDARY AS IDENTIFIED ON FEMA MAP 42017C0502F, EFFECTIVE DATE MAY 18, 1999.
4. CONTRACTOR SHALL BE RESPONSIBLE FOR REMOVING ALL EXISTING FEATURES AS NOTED ON THE PLAN AND THE CONTRACTOR SHALL BE RESPONSIBLE FOR REMOVING ANY EXISTING FEATURES INCIDENTAL TO PROPOSED CONSTRUCTION.

Legend

- Tract Boundary Line
- Existing Contour — 119
- Existing Sanitary Sewer — SaS
- Existing Water Main — W
- Existing Gas Line — G
- Existing Underground Electric — UGE
- Existing Storm Sewer
- Existing Utility Pole
- Existing Sign
- Existing Light
- Existing Valve
- Existing Curb
- Existing Vegetation
- Existing Overhead wires — OHW
- Stream
- Wetlands
- Soils Line
- Existing Vegetation to Remain
- 100-Year Floodplain Line

SERIAL NO. 2016-2450730

CALL BEFORE YOU DIG!
PENNSYLVANIA LAW REQUIRES 3 WORKING DAYS NOTICE FOR CONSTRUCTION PHASE, AND 10 WORKING DAYS IN DESIGN STAGE-STOP CALL.
PENNSYLVANIA ONE CALL SYSTEM, INC.
1-800-242-1776

INFORMATION SHOWN ON THIS PLAN IS THE RESULT OF A PROFESSIONAL SERVICE RENDERED BY AND IS OWNED BY DUMACK ENGINEERING. ANY REPRODUCTION OR REUSE WITHOUT APPROVAL OF DUMACK ENGINEERING IS NOT PERMITTED. ACCEPTANCE OF THIS PLAN CONSTITUTES AGREEMENT BY THE USER OF CREATING ADDITIONAL COPIES OR REVISING SAID PLAN WITHOUT THE WRITTEN CONSENT OF DUMACK ENGINEERING. ANY VIOLATION OF THIS RESTRICTION SHALL BE CONSIDERED A VIOLATION OF BOTH COPYRIGHT AND CONTRACT AND SHALL BE PROSECUTED TO THE FULLEST EXTENT OF THE LAW. CORPORATE ASSETS, BOTH OF WHICH SHALL BE PROSECUTED TO THE FULLEST EXTENT OF THE LAW.
THIS PLAN HAS BEEN SPECIFICALLY PREPARED FOR THE OWNER AND DEVELOPER NAMED HEREIN AND SHALL NOT BE USED OR REUSED IN WHOLE OR IN PART BY ANY OTHER PERSON OR FOR ANY PURPOSE OTHER THAN THAT WHICH IT IS INTENDED SHALL BE WITHOUT THE EXPRESS PERMISSION AND LIABILITY OF THE APPLICABLE PARTY, SOLE DISCRETION AND LIABILITY OF THE APPLICABLE PARTY.
THIS PROJECT HAS BEEN PREPARED FOR MUNICIPAL PURPOSES. ADDITIONAL INFORMATION MAY BE REQUIRED FOR CONSTRUCTION. OWNER MUST BE NOTIFIED OF ANY DISCREPANCIES BEFORE PROCEEDING WITH THE WORK.
© - 2013, DUMACK ENGINEERING - ALL RIGHTS RESERVED

NOT VALID WITHOUT AN EMBOSSED SEAL OR SIGNATURE IN RED INK.

HEATH ALAN DUMACK
REGISTERED PROFESSIONAL ENGINEER
COMMONWEALTH OF PENNSYLVANIA

HEATH A. DUMACK, P.E. & P.L.S.
PRESIDENT
PA P.E. LICENSE No. SU-054500-E

DUMACK ENGINEERING
ESTABLISHED IN 1964
A PROFESSIONAL CORPORATION
CIVIL - STRUCTURAL ENGINEERS & SURVEYORS
PENNS PARK OFFICE
677 DURHAM ROAD
P.O. BOX 487
PENNS PARK, PA 18943
PHONE: (215) 598-3230
FAX: (215) 598-1222
ROYERSFORD OFFICE
P.O. BOX 909
ROYERSFORD, PA 19468
TELEPHONE: (610) 489-4949
FAX: (610) 489-9449
www.Dumack.com

REV. No.	DATE	REVISION
1		
2		
3		
4		
5		
6		
7		
8		
9		
10		
11		
12		
13		
14		
15		
16		
17		
18		
19		
20		

PRELIMINARY AS FINAL
NOT FOR RECORDING

EXISTING PARCEL INFO:
T.M.P. No. 02-036-008
DEED BOOK: 2587 PAGE No. 1053
CURRENT ZONING: R-A-1

OWNER of RECORD:
SAMARPAN HINDU TEMPLE
2746 MECHANICSVILLE ROAD
BENSALEM, PA 19020

APPLICANT:
SAME AS ABOVE

40 0 20 40
GRAPHIC SCALE

EXISTING FEATURES & DEMOLITION PLAN
2746 MECHANICSVILLE ROAD
BENSALEM TOWNSHIP
BUCKS COUNTY, PA

DRAWN BY:	CHECKED BY:
A.E.Y.	H.A.D.
SCALE: 1"=40'	PROJECT No: 5447
PLAN DATE: OCT. 5, 2016	SHEET No: 3 of 17

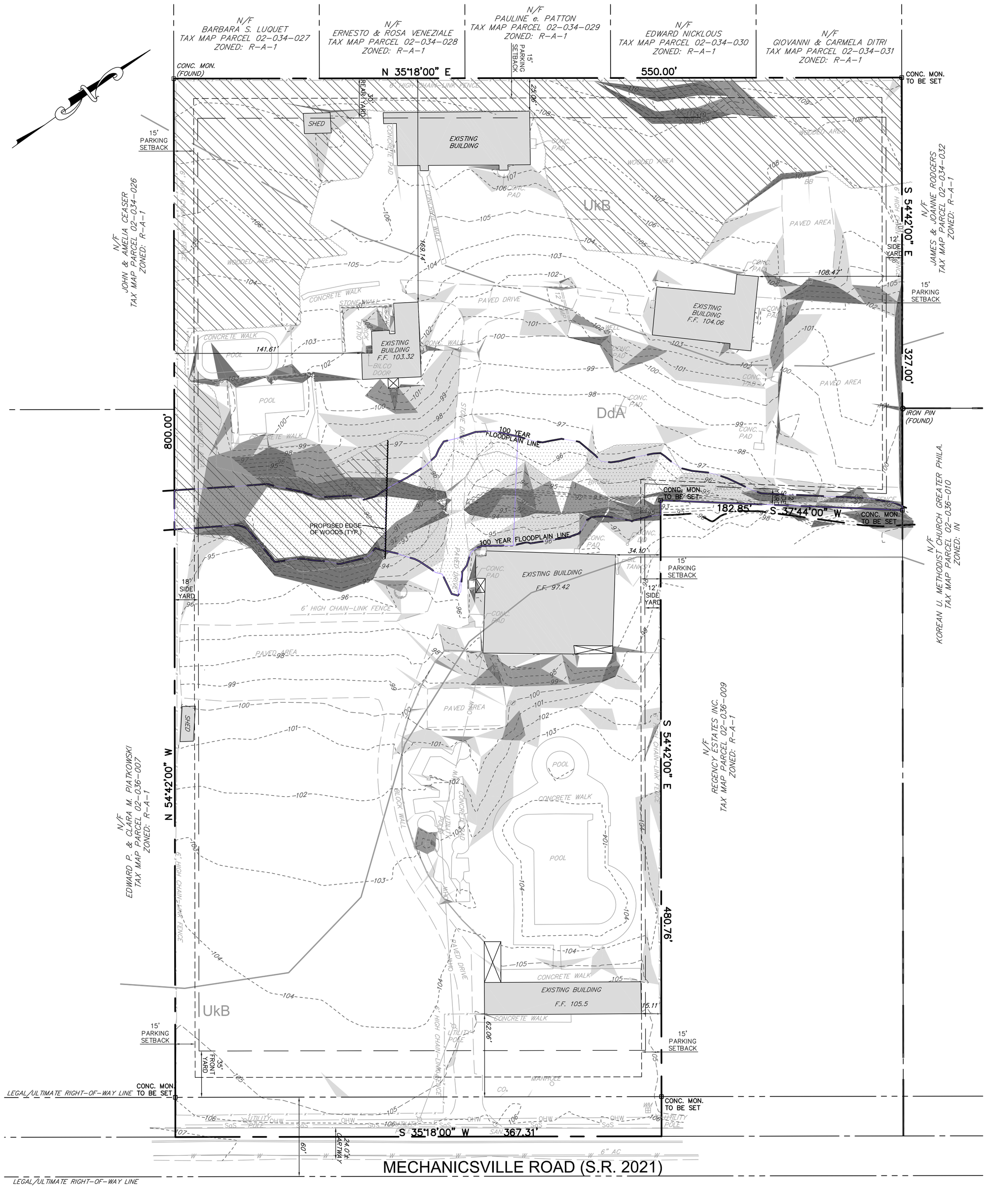

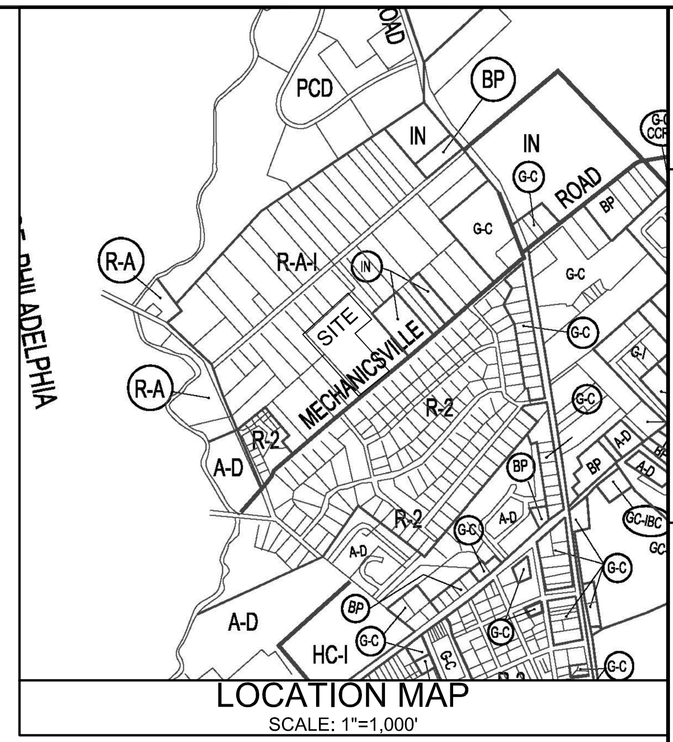

SERIAL NO. 2016-2450730

CALL BEFORE YOU DIG!
PENNSYLVANIA LAW REQUIRES 3 WORKING DAYS NOTICE FOR CONSTRUCTION PHASE AND 10 WORKING DAYS IN DESIGN STAGE-STOP CALL
PENNSYLVANIA ONE CALL SYSTEM, INC.
1-800-242-1776

INFORMATION SHOWN ON THIS PLAN IS THE RESULT OF A PROFESSIONAL SERVICE RENDERED BY AND IS OWNED BY DUMACK ENGINEERING. ANY REPRODUCTION OR REVISION WITHOUT APPROVAL OF DUMACK ENGINEERING IS NOT PERMITTED. ACCEPTANCE OF THIS PLAN CONSTITUTES AGREEMENT THAT OF CREATING ADDITIONAL COPIES OR REVISING SAID PLAN WITHOUT WRITTEN CONSENT OF DUMACK ENGINEERING. ANY USE OF THIS RESTRICTION SHALL BE CONSIDERED A VIOLATION OF BOTH COPYRIGHT AND CONTRACT AND SHALL BE PROSECUTED TO THE FULLEST EXTENT OF THE LAW. ANY USE OF THIS PLAN HAS BEEN SPECIFICALLY PREPARED FOR THE OWNER OR USER WITHOUT THE WRITTEN CONSENT OF DUMACK FOR ANY PURPOSE OTHER THAN THAT WHICH IT IS INTENDED SHALL BE AT THE USER'S SOLE DISCRETION AND LIABILITY OF THE APPLICABLE PARTY.

THIS PROJECT HAS BEEN PREPARED FOR MUNICIPAL PURPOSES, ADDITIONAL INFORMATION MAY BE REQUIRED FOR CONSTRUCTION. OWNER MUST BE NOTIFIED OF ANY DISCREPANCIES BEFORE PROCEEDING WITH THE WORK.

© - 2013, DUMACK ENGINEERING - ALL RIGHTS RESERVED

NOT VALID WITHOUT AN EMBOSSED SEAL, OR SIGNATURE IN RED INK.

HEATH ALAN DUMACK
COMMONWEALTH OF PENNSYLVANIA
REGISTERED PROFESSIONAL ENGINEER

HEATH A. DUMACK, P.E. & P.L.S.
PA P.E. LICENSE No. PE-065455-E
PA P.L.S. LICENSE No. SU-054500-E

DUMACK ENGINEERING
ESTABLISHED IN 1964
A PROFESSIONAL CORPORATION
CIVIL - STRUCTURAL ENGINEERS & SURVEYORS
PENNS PARK OFFICE
677 DURHAM ROAD
P.O. BOX 487
PENNS PARK, PA 18943
PHONE: (215) 598-1230
FAX: (215) 598-1222
ROYERSFORD OFFICE
P.O. BOX 809
ROYERSFORD, PA 19468
TELEPHONE: (610) 489-4949
FAX: (610) 489-9449
www.Dumack.com

REV No.	DATE	REVISION
1		
2		
3		
4		
5		
6		
7		
8		
9		
10		
11		
12		
13		
14		
15		
16		
17		
18		
19		
20		

PRELIMINARY AS FINAL
NOT FOR RECORDING

EXISTING PARCEL INFO:
T.M.P. No. 02-036-008
DEED BOOK: 2587 PAGE No. 1053
CURRENT ZONING: RA-1

OWNER of RECORD:
SAMARPAN HINDU TEMPLE
2746 MECHANICSVILLE ROAD
BENSALEM, PA 19020

APPLICANT:
SAME AS ABOVE

40 0 20 40
GRAPHIC SCALE

GENERAL NOTES:
1. PLAN WAS PREPARED WITHOUT THE BENEFIT OF A TITLE REPORT.
2. LOCATION OF UNDERGROUND UTILITIES AND INFORMATION SHOWN OBTAINED BY FIELD LOCATIONS AND THE PENNSYLVANIA ONE CALL SYSTEM. LOCATIONS ARE ONLY APPROXIMATE.
3. NO PORTION OF THE SITE IS LOCATED WITHIN THE 100-YEAR FLOODPLAIN BOUNDARY AS IDENTIFIED ON FEMA MAP 42017C0502F, EFFECTIVE DATE MAY 18, 1999.

Natural Resources Disturbance Inventory

NATURAL RESOURCE	% OF RESOURCE TO BE PROTECTED	% OF RESOURCE PERMITTED TO BE DISTURBED	TOTAL AREA OF NATURAL RESOURCE (AC.)	TOTAL AREA OF REQUIRED RESOURCE PROTECTION (AC.)	ACTUAL AREA OF RESOURCE PROTECTED (AC.)	ACTUAL AREA OF RESOURCE PROTECTED (%)	ACTUAL AREA OF RESOURCE DISTURBED (AC.)	ACTUAL AREA OF RESOURCE DISTURBED (%)
FLOODPLAINS	100%	0%	0.545	0.545	0.359	66%	0.186	34%
WETLANDS	100%	0%	0.000	0.000	0.000	0%	0.000	0%
WETLAND BUFFER	80%	20%	0.000	0.000	0.000	0%	0.000	0%
STEEP SLOPES:								
8%-15%	60%	40%	0.790	0.474	0.395	50%	0.395	50%
15%-25%	70%	30%	0.267	0.187	0.174	65%	0.094	35%
25% OR MORE	85%	15%	0.272	0.231	0.231	85%	0.041	15%
WOODLANDS:								
ENVIRONMENTALLY SENSITIVE	80%	20%	0.831	0.396	0.759	91%	0.072	9%
ALL OTHERS	50%	50%	0.895	0.448	0.895	100%	0.000	0%

*Natural resource chart treats each resource irrespective of other resources, the site capacity calculations utilize the resource with the highest protection ratio in the case of overlap

Legend

Tract Boundary Line
Existing Contour
Existing Sanitary Sewer
Existing Water Main
Existing Gas Line
Existing Underground Electric
Existing Storm Sewer
Existing Utility Pole
Existing Curb
Existing Vegetation
Legal Right-of-Way
8-15% Steep Slopes
15-25% Steep Slopes
>25% Steep Slopes
Floodplain
Woodlands

NATURAL RESOURCES PROTECTION PLAN
2746 MECHANICSVILLE ROAD
BENSALEM TOWNSHIP
BUCKS COUNTY, PA

DRAWN BY:	CHECKED BY:
A.E.Y.	H.A.D.
SCALE: 1"=40'	PROJECT No: 5447
PLAN DATE: OCT. 5, 2016	SHEET No: 4 of 17

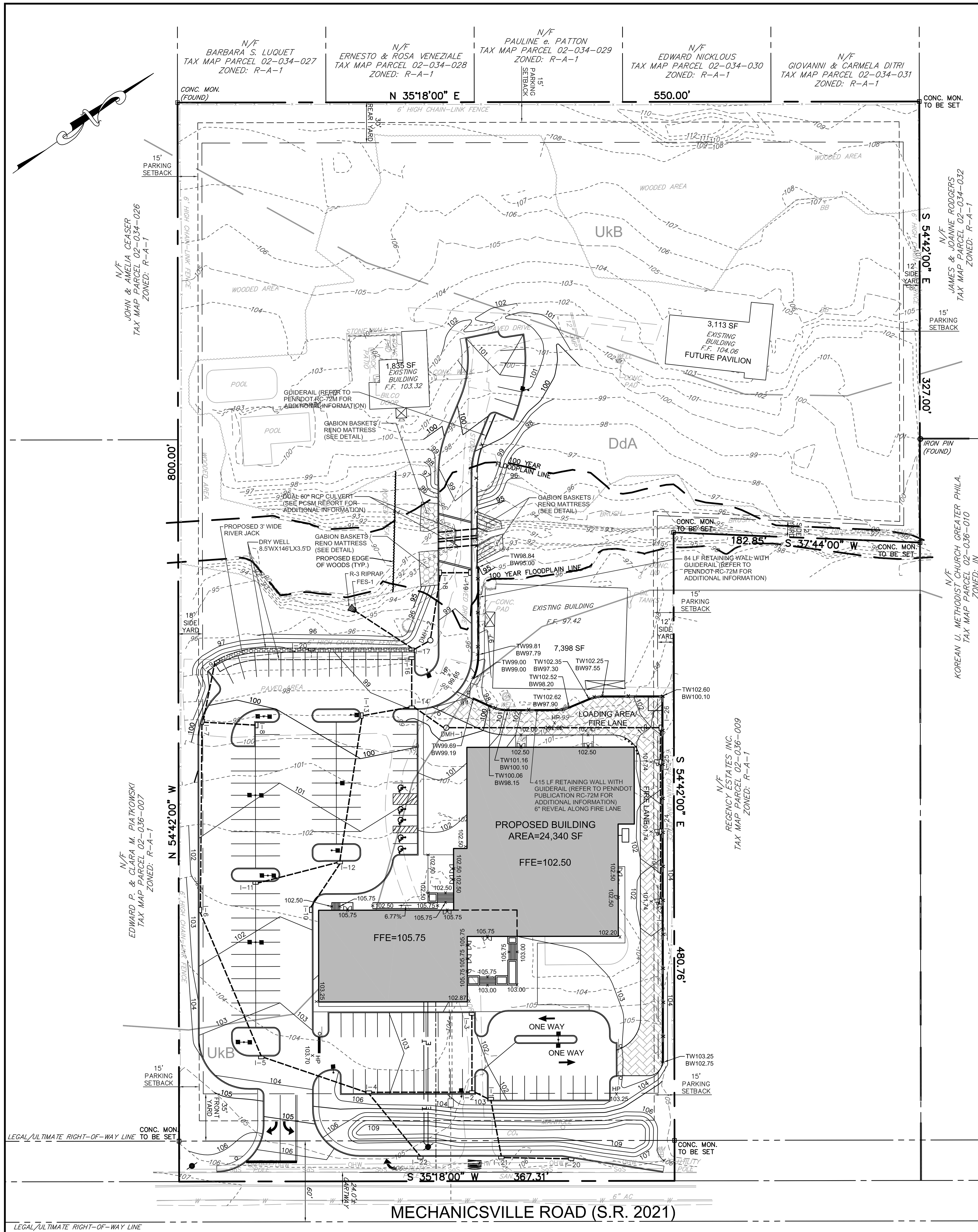

General Notes

1. Pennsylvania One Call System, Inc. notified for utility locations and assigned serial number 2016-2450730.
2. All construction, materials and workmanship shall conform to the latest standards and specifications of Bensalem Township and the Pennsylvania Department of Transportation. All work shall be performed in accordance with OSHA standards.
3. All work and materials shall be inspected by the Township Engineer and/or his approved representatives.
4. All proposed utilities to be placed underground.
5. Contractor is responsible for checking all distances, grades, quantities, lines and elevations and notifying Dumack Engineering of any discrepancies prior to proceeding with any work.
6. Proposed road construction shall conform to Bensalem Township Standards.
7. All road surface structures (inlet grates, valve box covers, manhole covers, etc.) and curb/paving joint shall be sealed with AC-20 liquid asphalt sealant.
8. All building waste from demolition shall be disposed of per PA Solid Waste Management Act of 1980. Waste shall not be disposed of on-site. All structural fill in and within 50' of the building areas (material under cartways, slabs, inlets, endwalls etc.) shall be compacted to 95% of Maximum Dry Density (ASTM D1557). All other structural fill shall be compacted to 95% of Maximum Dry Density (ASTM D698).
9. Site is located within the Poquessing Watershed. The recieving watershed is the Poquessing Creek. The Chapter 93 classification is WWF (Warm Water Fishes).
10. The underground basin as shown on this plan is a permanent facility and shall not be modified or removed unless prior approval is granted by Bensalem Township. The individual lot owner or owners, his/their successor or assigns shall be responsible for the perpetual maintenance of the facilities. The inlets and outlet structures shall be inspected after every major rain fall event to ensure the systems are not receiving sediment or debris. The inlets shall be cleaned of debris and sediment when 1' of sediment has accumulated in the sump area or every six months, whichever is less. Once a year the systems shall be inspected by the owner for proper function. Once every five years, or when deemed necessary by the owner the systems shall be flushed of accumulated sediment. This shall be done by utilizing an approved method for flushing the chambers of sediment and cleaning the flushed sediment from the inlets. Once every five years the system shall be inspected by a professional engineer to ensure the system is functioning as designed. The owner shall keep records of all inspection and maintenance activities. Such records shall be submitted to the Township on an annual basis. Bensalem Township shall have perpetual easements on and over the areas of the underground basins for the purpose of emergency maintenances and repair of said permanent facilities. The aforesaid responsibilities of the owner shall be subject to enforcement by Bensalem Township. In the event that the owner fails to honor his responsibility set forth herein, in any manor, Bensalem Township shall be the right of entry upon and within the area of the underground basins to undertake such corrective or maintenance efforts. The cost of such, as well as administrative, engineering, and legal costs for enforcement, may be imposed upon the responsible owner, as determined as assessed by Bensalem Township. Failure to remedy all associated costs described, may be subject of the imposition of a line by the Township against the owner or lot in question. In the same manner as the Township might otherwise be empowered by law to assess or oppose a lien against a property for municipal improvements.
11. All building material and wastes must be removed from the site and recycled in accordance with DEP's Solid Waste Regulations (25 PA Code 260.1 et seq., 271.1 et seq., and 287.1 et seq.), and/or any additional local, state or federal regulations. No building materials (used or unused) or waste materials shall be burned, buried, dumped or discharged at the site.

Subsurface Detention Basin Inspection and Maintenance Criteria:

1. INSPECTION, MAINTENANCE AND REPAIR OF THE UNDERGROUND STORMWATER MANAGEMENT SYSTEMS SHALL BE THE RESPONSIBILITY OF THE PROPERTY OWNER.
2. 100 PERCENT VEGETATIVE COVER BY HERBACEOUS SPECIES SHALL BE MAINTAINED THROUGHOUT ALL EMBANKMENTS AND LAWN AREAS WITH DIRECT DISCHARGE TO THE UNDERGROUND FACILITY. ANY AREA BECOMING VOID OF VEGETATION SHALL BE IMMEDIATELY CORRECTED BY REPLANTING OR OTHER ADEQUATE MEASURES NECESSARY TO PREVENT EROSION THAT MAY JEOPARDIZE THE POROSITY OF THE SYSTEM. AT NO TIME SHALL MULCH BE USED ON SLOPES OF DIRECT DRAINAGE TO THE UNDERGROUND FACILITY.
3. GRASS CLIPPINGS SHALL BE COLLECTED AND REMOVED TO PREVENT CLOGGING OF THE FACILITY. FALLEN LEAVES SHALL BE COLLECTED AND REMOVED FROM THE SITE A MINIMUM OF ONE (1) TIME PER WEEK DURING THE FALL SEASON. ROOF DRAINS AND DEBRIS TRAPS SHALL BE CHECKED FOR LEAF LITTER AND OTHER DEBRIS, WHICH MAY CLOG PERFORATED PIPES AND/OR STONE BEDS.
4. THE OUTFALL STRUCTURE SHALL BE INSPECTED QUARTERLY, OR AFTER ANY LARGE STORM EVENT, FOR CLOGGING. REMOVE CLEANOUT CAPS AND INSPECT FOR DEBRIS. REMOVE ACCUMULATED LEAVES, TWIGS, SEDIMENT AND OTHER DEBRIS AS REQUIRED TO KEEP THE ROOF DRAINAGE SYSTEM CLEAN. IF AFTER INSPECTION IT IS DETERMINED THAT SEDIMENT NEEDS TO BE REMOVED FROM THE SEEPAGE BED, INJECT SYSTEM WITH WATER, SUSPEND SILT AND PUMP CHAMBER.
5. THE PROPERTY OWNER SHALL SUBMIT AN ANNUAL REPORT TO THE TOWNSHIP DETAILING THE MAINTENANCE WORK, INCLUDING REPAIRS, IF ANY, THAT ARE CARRIED OUT DURING A GIVEN CALENDAR YEAR. SUCH REPORTS SHALL BE DUE ON OR ABOUT THE FIRST DAY OF MARCH OF THE FOLLOWING YEAR.
6. THE BOROUGH AND/OR IT'S AGENTS RESERVES THE RIGHT AND PRIVILEGE TO ENTER UPON SUCH LANDS FROM TIME TO TIME FOR THE PURPOSE OF INSPECTION OF SAID UNDERGROUND STORMWATER MANAGEMENT FACILITY IN ORDER TO ENSURE THAT THE STRUCTURAL AND DESIGN INTEGRITY AND MAINTENANCE REQUIREMENTS ARE BEING MAINTAINED BY THE PROPERTY OWNER.

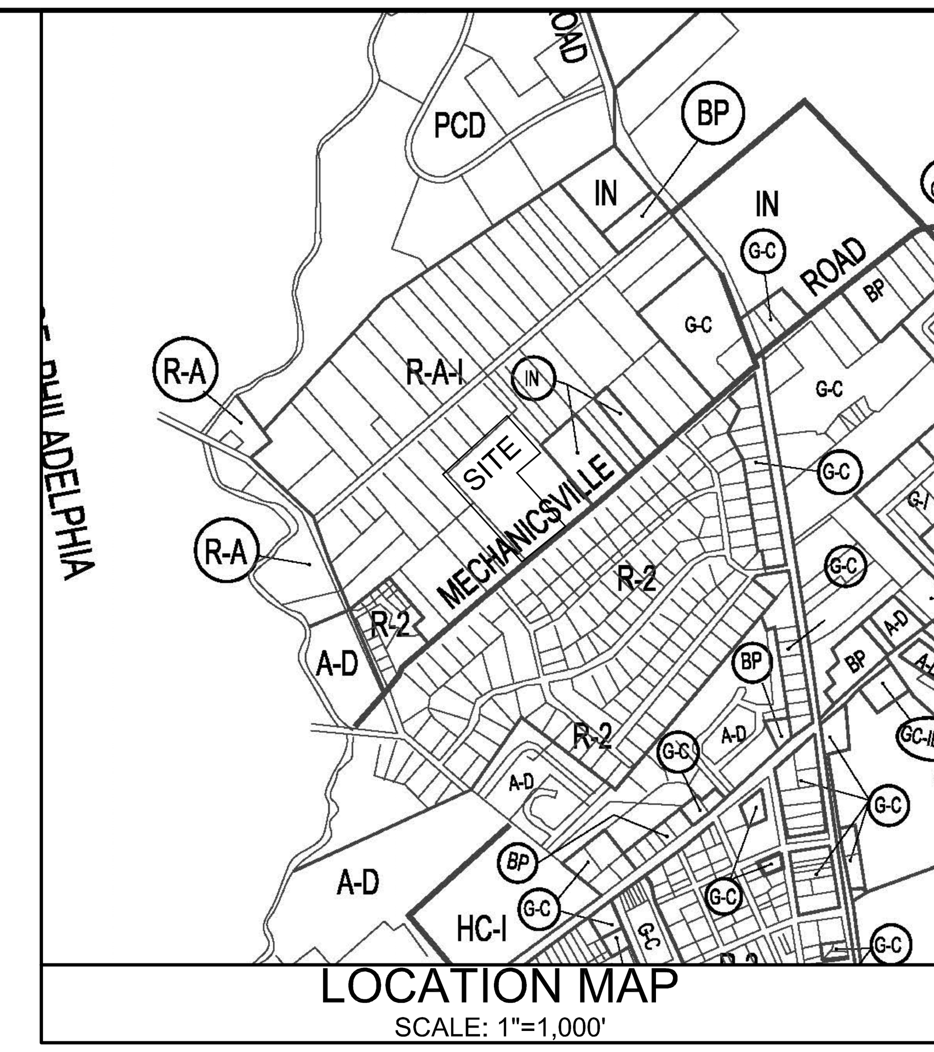

Storm Sewer System:

1. All storm sewers and their appurtenances shall conform with the latest edition of Bensalem Township, Subdivision and Land Development Ordinance, as revised. The contractor shall obtain and implement these specifications.
2. All inlet assemblies shall be constructed in accordance with the requirements of PennDOT Publication 408, Section 605, for inlet assemblies and Section 713.2 for precast cement concrete units and PennDOT Publication, standards for roadway construction, RC-34.
3. All storm sewer piping shall be smooth-lined corrugated polyethylene pipe, meeting the requirements of ASTM F 405, ASTM F 667, AASHTO M 252, AASHTO M 292).
4. All endwalls shall be constructed in accordance with the requirements of PennDOT Publication 408, Section 605 and PennDOT Publication 72, Standards for Roadway Construction, RC-31.
5. All storm sewer inlet grates shall be bicycle safe.
6. Contractor shall continuously record all "as-built" information on a planset during construction (including actual invert, length, slope and locational data), and submit a complete "As-built" plan of the system upon completion of construction.

PCSM BMP Construction Sequence:

1. REFER TO CONSTRUCTION SEQUENCE ON THE DRAWING ENTITLED, "EROSION & CONTROL PLAN", TO DETERMINE TIMING OF PCSM BMP'S RELATIVE TO GENERAL SITE WORK.
2. EXCAVATE INFILTRATION AREA. CONTACT TOWNSHIP ENGINEER TO DETERMINE OF TOWNSHIP INSPECTION IS DESIRED.
3. PLACE GEOGRID, INLETS, STONE, AND STORAGE PIPING. PROVIDE INLET PROTECTION AS INLETS ARE PLACED.
4. LAYER GEOGRID ON TOP OF SYSTEM AND PLACE 2A STONE TO BRING SURFACE UP TO SUBGRADE.
5. CONSTRUCT CONVEYANCE STORM PIPING AND INLETS. PROVIDE INLET PROTECTION AS INLETS ARE PLACED.
6. CONTRACTOR IS RESPONSIBLE FOR PREVENTING SEDIMENT FROM ENTERING UNDERGROUND BASIN. AFTER SITE IS STABILIZED CONTRACTOR SHALL CLEAN SEDIMENT FROM SYSTEM PRIOR TO CONSTRUCTION COMPLETION.

Critical Stages:

1. DURING PRELIMINARY SITE PREPARATION, A PROFESSIONAL ENGINEER SHALL PERFORM ADEQUATE OBSERVATIONS TO CERTIFY THE BASIN AREA WAS PROPERLY FENCED TO PROTECT FROM COMPACTION OF CONSTRUCTION EQUIPMENT.
2. DURING CONSTRUCTION OF THE UNDERGROUND BASIN, A PROFESSIONAL ENGINEER SHALL PERFORM ADEQUATE OBSERVATIONS TO CERTIFY THE BASIN WAS CONSTRUCTED AS DESIGNED.

DRAINAGE PLAN CERTIFICATION:

I, HEATH DUMACK, P.E. ON THIS DATE________________,HAVE REVIEWED AND HEREBY CERTIFY THAT TO THE BEST OF MY KNOWLEDGE THE SWM SITE PLAN MEETS ALL DESIGN STANDARDS AND CRITERIA OF THE BENSALEM TOWNSHIP STORMWATER MANAGEMENT ORDINANCE CHAPTER 196 OR PLAN.

SIGNATURE ________________ DATE ________________

OWNERS ACKNOWLEDGMENT:

I,________________ (LAND OWNER), HEREBY ACKNOWLEDGES THAT THE STORMWATER MANAGEMENT SYSTEM, INCLUDING ALL BMP's, ARE A PERMANENT FIXTURE THAT CAN BE ALTERED OR REMOVED ONLY AFTER APPROVAL BY THE BOROUGH DESIGNEE OF A REVISED PLAN, WHICH SHALL BE RECORDED WITH THE RECORD PLAN AND WHICH SHALL BE APPLICABLE TO ALL FUTURE LAND OWNERS.

SIGNATURE ________________ DATE ________________

Legend

Item	Symbol
Tract Boundary Line	
Legal Right-of-Way	
Existing Contour	119
Existing Index Contour	120
Existing Sanitary Sewer	SaS
Existing Water Main	W
Existing Storm Sewer	
Existing Tree	
Existing Treeline	
Proposed Contour	116
Proposed Spot Elevation	x 119.9
Proposed Storm Sewer	
Proposed Curb	

SOIL SYMBOLS/SERIES	HYDRIC SOILS CRITERIA: HYDRIC SOIL	HYDRIC CRITERIA CODE	MEETS SATURATION CRITERIA	MEETS FLOODING CRITERIA	MEETS PONDING CRITERIA
DdA Doylestown Silt Loam 0% – 3% SLOPES	YES	2	YES	YES	YES
UkB Urban Land–Chester Complex 0% – 8% SLOPES	NO	----	----	----	----

SOIL SYMBOLS/ SERIES	DEPTH TO THE TOP SEASONAL WATER TABLE	DEPTH TO RESTRICTIVE FEAURE	DWELLINGS WITH BASEMENTS	DWELLINGS WITHOUT BASEMENTS	SMALL COMMERCIAL BUILDINGS	LAND CAPABILITY	PRIME FARMLAND	HYDROLOGY CODE
DdA Doylestown Silt Loam 0% – 3% SLOPES	0 TO 6 Inches	60 TO 72 Inches (LITHIC BEDROCK)	VERY LIMITED	VERY LIMITED	VERY LIMITED	4w	NOT PRIME FARMLAND	D
UkB Urban Land–Chester Complex 0% – 8% SLOPES	About 0 Inches	10 TO 99 Inches (LITHIC BEDROCK)	--	--	--	8s	NOT PRIME FARMLAND	D

SOIL SURVEY STAFF, NATURAL RESOURCES CONSERVATION SERVICE, UNITED STATES DEPARTMENT OF AGRICULTURE. WEB SOIL SURVEY. AVAILABLE ONLINE AT HTTP://WEBSOILSURVEY.NRCS.USDA.GOV/.

SERIAL NO. 2016-2450730
CALL BEFORE YOU DIG!
PENNSYLVANIA LAW REQUIRES 3 WORKING DAYS NOTICE FOR CONSTRUCTION PHASE AND 10 WORKING DAYS IN DESIGN STAGE-STOP CALL
PENNSYLVANIA ONE CALL SYSTEM, INC.
1-800-242-1776

INFORMATION SHOWN ON THIS PLAN IS THE RESULT OF A PROFESSIONAL SERVICE RENDERED BY AND IS OWNED BY DUMACK ENGINEERING. REPRODUCTION OF THIS PLAN WITHOUT APPROVAL OF DUMACK ENGINEERING IS NOT PERMITTED. THE REPRODUCTION OF A COPY OF THIS PLAN FOR THE PURPOSE OF CREATING ADDITIONAL COPIES OR REVISING SAID PLAN SHALL, IN NO CIRCUMSTANCE, BE APPROVED. VIOLATION OF THIS RESTRICTION SHALL BE CONSIDERED A VIOLATION OF BOTH THE PROFESSIONAL CODE OF ETHICS AND A THEFT OF CORPORATE ASSETS, BOTH OF WHICH SHALL BE PROSECUTED TO THE FULLEST EXTENT OF CURRENT STATUTES.
THIS PLAN HAS BEEN SPECIFICALLY PREPARED FOR THE OWNER DESIGNATED HEREON, ANY MODIFICATION, REVISION, DUPLICATION OR USE WITHOUT THE WRITTEN CONSENT OF DUMACK ENGINEERING IS PROHIBITED. RELIANCE ON THIS PLAN FOR ANY PURPOSE OTHER THAN THAT WHICH IT IS INTENDED SHALL BE AT THE SOLE DISCRETION AND LIABILITY OF THE APPLICABLE PARTY.

THIS PROJECT HAS BEEN PREPARED FOR MUNICIPAL PURPOSES. ADDITIONAL INFORMATION MAY BE REQUIRED FOR CONSTRUCTION.

ALL DIMENSIONS MUST BE VERIFIED BY CONTRACTOR AND OWNER MUST BE NOTIFIED OF ANY DISCREPANCIES BEFORE PROCEEDING WITH THE WORK.

© – 2013, DUMACK ENGINEERING – ALL RIGHTS RESERVED

NOT VALID WITHOUT AN EMBOSSED SEAL OR SIGNATURE IN RED INK.

COMMONWEALTH OF PENNSYLVANIA — REGISTERED PROFESSIONAL — HEATH ALAN DUMACK — ENGINEER — PE-051685-E

HEATH A. DUMACK, P.E. & P.L.S.
PA P.E. LICENSE No. PE-051685-E
PA P.L.S. LICENSE No. SU-054500-E

DUMACK ENGINEERING
A PROFESSIONAL CORPORATION
ESTABLISHED IN 1964
CIVIL - STRUCTURAL ENGINEERS & SURVEYORS
PENNS PARK OFFICE
677 DURHAM ROAD
P.O. BOX 487
PENNS PARK, PA 18943
PHONE: (215) 598-1230
FAX: (215) 598-1232
ROYERSFORD OFFICE
P.O. BOX 809
ROYERSFORD, PA 19468
PHONE:(610) 489-9449
FAX: (610) 489-9449
www.Dumack.com

REV. No.	DATE	REVISION
1		
2		
3		
4		
5		
6		
7		
8		
9		
10		
11		
12		
13		
14		
15		
16		
17		
18		
19		
20		

PRELIMINARY AS FINAL
NOT FOR RECORDING

EXISTING PARCEL INFO:
T.M.P. No. 02-036-008
DEED BOOK: 2587 PAGE No. 1053
CURRENT ZONING: R-A-1

OWNER of RECORD:
SAMARPAN HINDU TEMPLE
2746 MECHANICSVILLE ROAD
BENSALEM, PA 19020

APPLICANT:
SAME AS ABOVE

40 0 20 40
GRAPHIC SCALE

POST CONSTRUCTION STORMWATER MANAGEMENT PLAN
2746 MECHANICSVILLE ROAD
BENSALEM TOWNSHIP
BUCKS COUNTY, PA

DRAWN BY: A.E.Y.
CHECKED BY: H.A.D.
SCALE: 1"=40'
PROJECT No: 5447
PLAN DATE: OCT. 5, 2016
SHEET No. 5 of 17

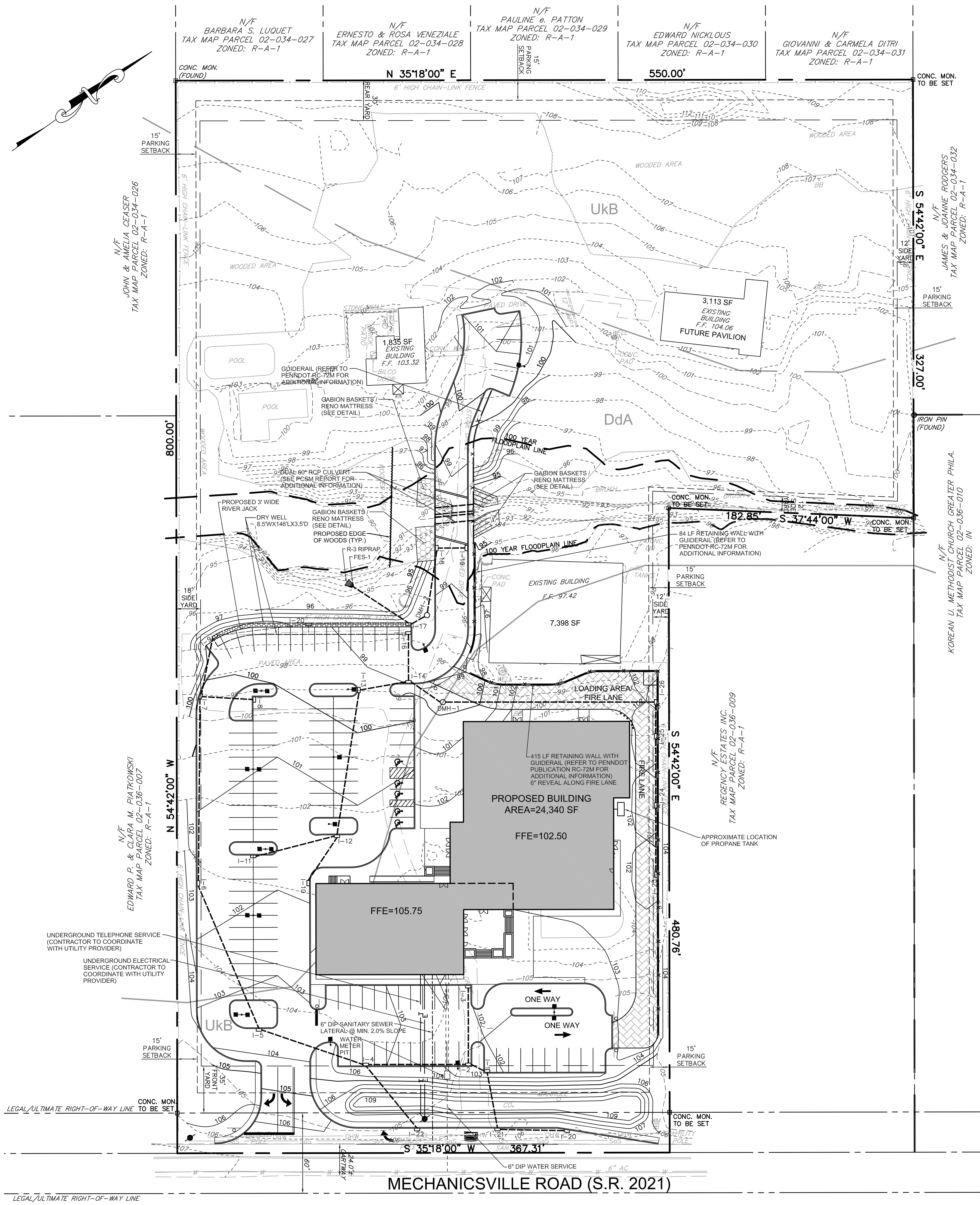

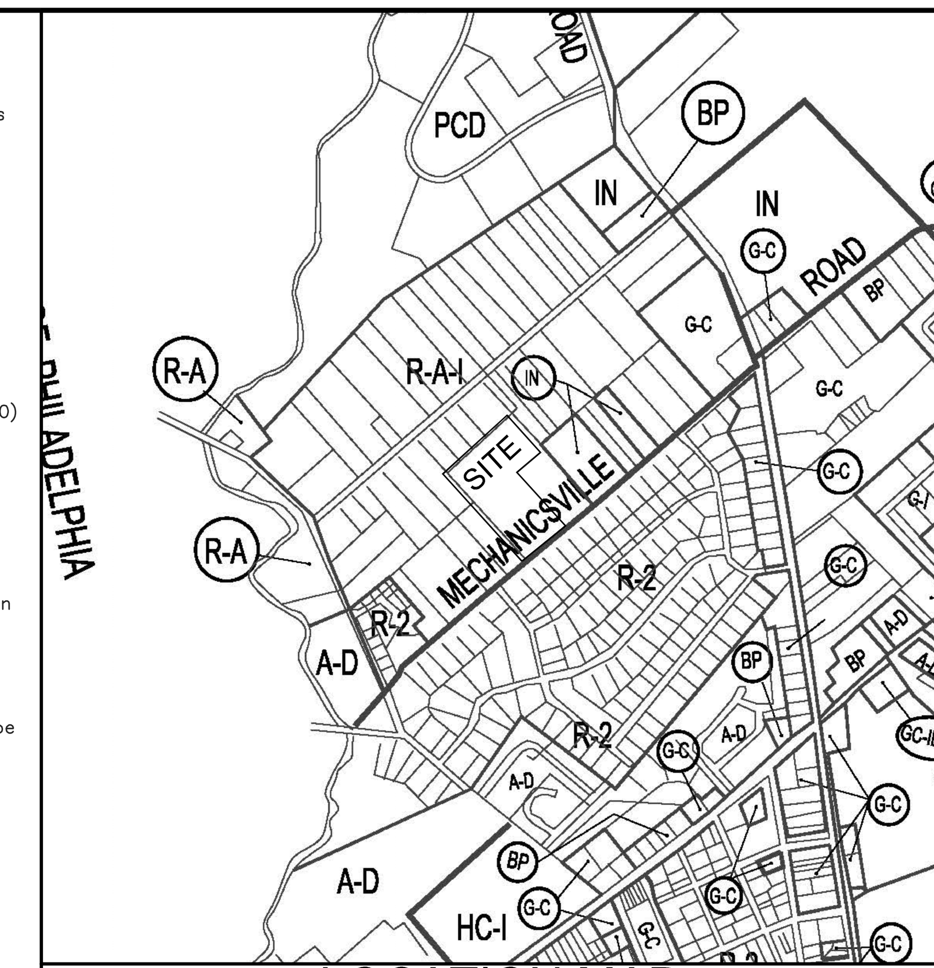

LOCATION MAP

SCALE: 1"=1,000'

Water System

1. All water mains and their appurtenances are to conform with the specifications of Aqua Pennsylvania, Inc.. The Contractor shall obtain and implement these Specifications.
2. All proposed water mains shall be constructed of Ductile Iron (ANSI/AWWA C151/A21.51) Class 52 push-on or mechanical joint (ANSI/AWWA C111/A21.11) as manufactured by the Griffin Pipe Co., U.S. Pipe Co. or approved equal.
3. All pipe shall be outside coated and have a cement lining conforming to ANSI/AWWA C104/A21.4 seal coated inside (DCL & SC) 3" to 12" – min 1/8"; 14" to 24" – min 3/16".
4. Pipe 14" and larger to be cut in the field shall be "GAUGED FULL LENGTH."
5. All proposed water main fittings shall be Ductile Iron (ANSI/AWWA C110/A21.10) mechanical joint (ANSI/AWWA C111/A21.11) Class 250 as manufactured by the Griffin Pipe Co., U.S. Pipe Co., or approved equal. Fittings shall be furnished suitable for use with the type of pipe specified herein.
6. All fittings shall be outside coated and have a cement lining conforming to ANSI/AWWA C104/A21.4 seal coated inside (DCL & SC) 3" to 12" – min 1/8"; 14" to 24" – min 3/16".
7. All proposed water valves 4" and larger shall be mechanical joint; metropolitan design, New York Pattern, vertical plane, nut operated, iron body, bronze mounted, non-rising stem, resilient seat, open left CCW, for 200 PSI working pressure and 400 PSI test pressure as manufactured by the A.P. Smith Mfg. Co., or M & H Valve & Fitting Co., and shall conform to AWWA C509. All valves 3/4" through 3" shall be bronze wedge type gate valve. Valves shall have non-rising stem with solid tee head operating nut. All gate valves shall be provided with a roadway screw type cast iron valve box. Boxes for valves 3" and smaller shall have arch base. All 16" valves shall be horizontal with beveled gears and 3" bypass valve.
8. All water mains shall be hydrostatically tested and disinfected in accordance with Aqua Pennsylvania, Inc. Specifications, prior to acceptance.
9. Any water main crossing another utility shall have 18" of vertical clearance or shall be encased in concrete a distance of 10 feet on either side of the crossing.
10. All tees, bends, hydrants, terminus and similar water line appurtenances shall be installed with concrete thrust blocks.
11. A minimum of 4 feet of cover shall be provided over water lines below final grade.
12. All water services 2" and smaller shall be type K soft copper.
13. All trenching, pipe laying and backfilling shall be in accordance with federal OSHA regulations.
14. The utility contractor shall have approval of all governing agencies having jurisdiction over this system prior to installation.
15. All work of this plan shall be done in strict accordance with Aqua Pennsylvania, Inc. specifications.
16. Contractor shall continuously record all "as-built" information on a planset during construction (including actual depth, length, valve/hydrant/service connections and locational data), and submit a complete "As-built" plan of the system upon completion of construction.

Storm Sewer System:

1. All storm sewers and their appurtenances shall conform with the latest edition of Bensalem Township, Subdivision and Land Development Ordinance, as revised. The contractor shall obtain and implement these specifications.
2. All inlet assemblies shall be constructed in accordance with the requirements of PennDOT Publication 408, Section 605, for inlet assemblies and Section 713.2 for precast cement concrete units and PennDOT Publication, standards for roadway construction, RC-34.
3. All storm sewer piping shall be smooth-lined corrugated polyethylene pipe, meeting the requirements of ASTM F 405, ASTM F 667, AASHTO M 252, AASHTO M 292).
4. All endwalls shall be constructed in accordance with the requirements of PennDOT Publication 408, Section 605 and PennDOT Publication 72, Standards for Roadway Construction, RC-31.
5. All storm sewer inlet grates shall be bicycle safe.
6. Contractor shall continuously record all "as-built" information on a planset during construction (including actual invert, length, slope and locational data), and submit a complete "As-built" plan of the system upon completion of construction.

Sanitary Sewer System

1. Bucks County Water & Sewer Authority is to be contacted one week prior to sanitary sewer construction, and 72 hours prior to excavating near, and connecting into any existing sanitary sewer.
2. All sanitary sewers and their appurtenances shall conform with the latest edition of the Standard Construction and Material Specifications for Sanitary Sewer Extensions for Bucks County Water & Sewer Authority.
3. Shop drawings of all materials to be used in the construction of the sanitary sewer system must be submitted to, and approved by Bucks County Water & Sewer Authority prior to construction.
4. All materials to be used on the job must be inspected by a representative of Bucks County Water & Sewer Authority to insure conformance e with approved shop drawings.
5. All proposed sanitary sewer mains and laterals shall be constructed of Ductile Iron. Ductile Iron (ANSI/AWWA C151/A21.51 & ASTM A746 shall be Class 52 with push-on or mechanical joint (ANSI/AWWA C111/A21.11) as manufactured by Griffin Pipe Co., U.S. Pipe Co., or approved equl. All pipe shall be outside coated with a minimum of 1 mil. bituminous paint (ANSI/AWWA C151/A21.51).
6. All wye branches and building connections shall be furnished in accordance with the same specifications as DIP sewer pipe.
7. Any sanitary sewer crossing another utility shall have 18" of vertical clearance or shall be encased in concrete a distance of 10 feet on either side of the crossing.
8. All sanitary sewer lines shall be tested by the air test method and all manholes shall be tested by vacuum test method in accordance with Bucks County Water & Sewer Authority specifications.
9. If blasting is required, the contractor shall comply with all requirements of Bensalem Township, and the Commonwealth of Pennsylvania.
10. The contractor shall post all required sureties and comply with all safety regulations.
11. The contractor shall be solely responsible for injury to persons or property located within or beyond the area or scope of the project that may result from his work.
12. The contractor shall support sides and ends of all excavation or structures.
13. The contractor is advised to obtain and implement the Township Plumbing Code for on-lot sanitary lateral installation.
14. Cleanouts shall be installed at each bend in a sanitary lateral, and a minimum of every 100 feet.
15. Contractor shall continuously record all "as-built" information on a planset during construction (including actual invert, length, slope and locational data), and submit a complete "As-built" plan of the system upon completion of construction.

Legend

- Tract Boundary Line
- Legal Right-of-Way
- Existing Sanitary Sewer (SaS)
- Existing Water Main (W)
- Existing Storm Sewer
- Existing Gas Main (G)
- Existing Electric (E)
- Existing Telephone (T)
- Existing Treeline
- Proposed Water Service
- Proposed Sanitary Sewer Lateral
- Proposed Telephone Service (T)
- Proposed Electrical Service (E)
- Proposed Curb
- Existing Utility Pole
- Existing Valve

SERIAL NO. 2016-2450730

CALL BEFORE YOU DIG!

PENNSYLVANIA LAW REQUIRES 3 WORKING DAYS NOTICE FOR CONSTRUCTION PHASE AND 10 WORKING DAYS IN DESIGN STAGE-STOP CALL

PENNSYLVANIA ONE CALL SYSTEM, INC.

1-800-242-1776

INFORMATION SHOWN ON THIS PLAN IS THE RESULT OF A PROFESSIONAL SERVICE RENDERED BY AND IS OWNED BY DUMACK ENGINEERING. REPRODUCTION OF THIS PLAN WITHOUT APPROVAL OF DUMACK ENGINEERING IS NOT PERMITTED. THE REPRODUCTION OF A COPY OF THIS PLAN FOR THE PURPOSE OF CREATING ADDITIONAL COPIES OR REVISING SAID PLAN SHALL, IN NO CIRCUMSTANCE, BE APPROVED. VIOLATION OF THIS RESTRICTION SHALL BE CONSIDERED A VIOLATION OF BOTH THE PROFESSIONAL CODE OF ETHICS AND A THEFT OF CORPORATE ASSETS, BOTH OF WHICH SHALL BE PROSECUTED TO THE FULLEST EXTENT OF CURRENT STATUTES.
THIS PLAN HAS BEEN SPECIFICALLY PREPARED FOR THE OWNER DESIGNATED HEREON, ANY MODIFICATION, REVISION, DUPLICATION OR USE WITHOUT THE WRITTEN CONSENT OF DUMACK ENGINEERING IS PROHIBITED. RELIANCE ON THIS PLAN FOR ANY PURPOSE OTHER THAN THAT WHICH IT IS INTENDED SHALL BE AT THE SOLE DISCRETION AND LIABILITY OF THE APPLICABLE PARTY.

THIS PROJECT HAS BEEN PREPARED FOR MUNICIPAL PURPOSES. ADDITIONAL INFORMATION MAY BE REQUIRED FOR CONSTRUCTION.

ALL DIMENSIONS MUST BE VERIFIED BY CONTRACTOR AND OWNER MUST BE NOTIFIED OF ANY DISCREPANCIES BEFORE PROCEEDING WITH THE WORK.

©– 2013, DUMACK ENGINEERING – ALL RIGHTS RESERVED

NOT VALID WITHOUT AN EMBOSSED SEAL OR SIGNATURE IN RED INK.

COMMONWEALTH OF PENNSYLVANIA – REGISTERED PROFESSIONAL – HEATH ALAN DUMACK – ENGINEER – PE-051685-E

HEATH A. DUMACK, P.E. & P.L.S.
PA P.E. LICENSE No. PE-051685-E
PA P.L.S. LICENSE No. SU-054500-E

DUMACK ENGINEERING
A PROFESSIONAL CORPORATION
ESTABLISHED IN 1964
CIVIL - STRUCTURAL ENGINEERS & SURVEYORS

PENNS PARK OFFICE
677 DURHAM ROAD
P.O. BOX 487
PENNS PARK, PA 18943
PHONE: (215) 598-1230
FAX: (215) 598-1232

ROYERSFORD OFFICE
P.O. BOX 809
ROYERSFORD, PA 19468
PHONE:(610) 489-9449
FAX: (610) 489-9449

www.Dumack.com

REV. No.	DATE	REVISION
1		
2		
3		
4		
5		
6		
7		
8		
9		
10		
11		
12		
13		
14		
15		
16		
17		
18		
19		
20		

PRELIMINARY AS FINAL
NOT FOR RECORDING

EXISTING PARCEL INFO:
T.M.P. No. 02-036-008
DEED BOOK: 2587 PAGE No. 1053
CURRENT ZONING: R-A-1

OWNER of RECORD:
SAMARPAN HINDU TEMPLE
2746 MECHANICSVILLE ROAD
BENSALEM, PA 19020

APPLICANT:
SAME AS ABOVE

GRAPHIC SCALE: 40 0 20 40

DRAINAGE & UTILITY PLAN
2746 MECHANICSVILLE ROAD
BENSALEM TOWNSHIP
BUCKS COUNTY, PA

DRAWN BY: A.E.Y.	CHECKED BY: H.A.D.
SCALE: 1"=40'	PROJECT No: 5447
PLAN DATE: OCT. 5, 2016	SHEET No. 6 of 17

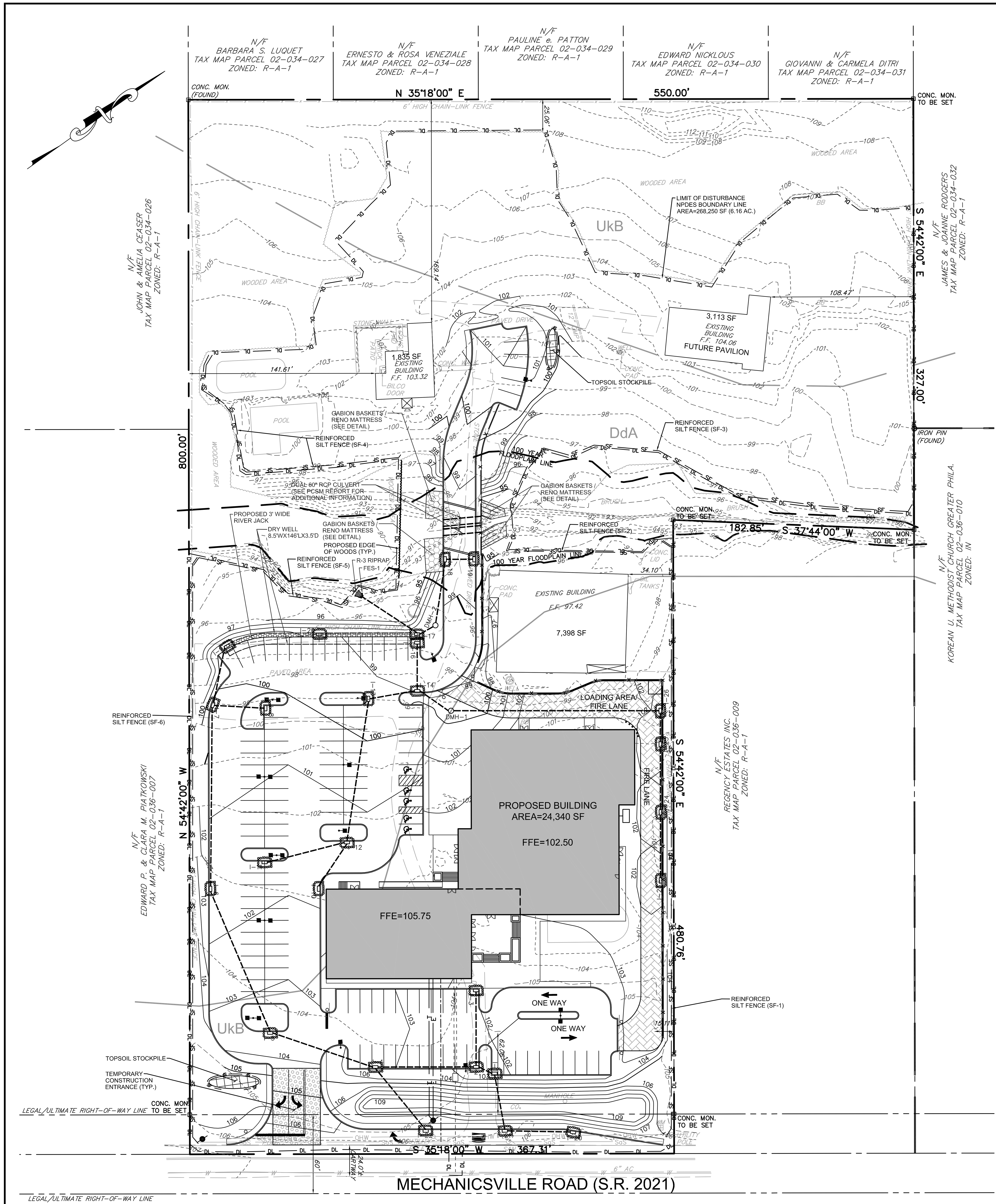

CONSTRUCTION SEQUENCE

Note: Site development operations should be performed in accordance with the following general sequence of operations. The contractor may deviate from the staging of permanent site improvement construction items, with approval of the Conservation District inspector. Deviation from the relative order of erosion and sediment control measures should not occur without approval of the Conservation District Inspector and Site Engineer.

1. Notify the Bucks County Conservation District and Bensalem Township 3 days prior to the start of construction.

2. Install construction entrance at site access, tree protection fence, and silt fence where shown on the plan.

3. Demo existing features as shown on the plans. Clear and grub site.

4. Strip topsoil and stockpile where shown on plan. All stripped topsoil stockpiles shall have temporary seeding installed.

5. Rough grade site and building pad. Install storm sewer system and stone drywell starting at the downstream ends and working upstream. All trenches shall be backfilled with stone or stabilized with seed and mulch at the end of each day. Place inlet protection on inlets as shown. Contractor is responsible for ensuring the undergpund detention basins do not receive sediment. Contractor must notify the Township Engineer's office three (3) days prior to the construction of any proposed infiltration BMP stormwater facility.

6. Install water, sewer and other utilities. Make offsite utility connections and install offsite water and sanitary sewer. All trenches shall be backfilled with stone or stabilized with seed and mulch at the end of each day. Install sanitary sewer, water system, and all underground utilities starting at the downstream end and working upstream.

7. Install curb, subbase and base course for the paved parking lot and entrance drive.

8. Construct building. Complete final grading after the building is completed and apply permanent seeding mixture and install all required plantings.

9. Flush and remove all affected storm drainage pipe of accumulated silt.

10. Upon complete stabilization of site, remove erosion control devices and convert the basin into a permanent stormwater management facility. The site shall be considered stabilized when the permanent vegetation has provided a 70% groundcover.

11. Until the site is stabilized, all erosion and sedimentation controls must be maintained properly. Maintenance must include inspections of all erosion and sedimentation controls after each storm event or on a weekly basis. All preventative and remedial maintenance work, including clean-out, repair, replacement, regrading, reseeding, remulching and renetting, must be performed immediately.

12. After site is stabilized an As-Built Plan shall be prepared and submitted to the Bucks County Conservation District.

Erosion and Sediment Control BMPs

The erosion and sedimentation control devices referenced in this plan have been designed in accordance with the standards and specifications of the Pennsylvania Department of Environmental Protection (PaDEP) Chapter 102 Regulations. These regulations are outlined in the PaDEP Bureau of Water Quality Protection Publication, "Erosion and Sediment Pollution Control Program Manual" dated March 2000.

The following erosion and sediment control measures and facilities shall be utilized in controlling and preventing erosion and sedimentation.

__Vegetated Surface Stabilization__ – Vegetation will be used as a control measure to achieve either temporary or permanent stabilization of disturbed earth surfaces. Such measures will be considered in place and functional when the required uniform rate of coverage (70 %) is obtained.

Seed specifications, liming, fertilizing and seeding mixtures are based on recommendations set forth in the Penn State University's 1991-92, The Agronomy Guide and Section 804 and 805 of PennDOT Publication 408, 2000 Edition as amended.

The following liming, fertilizing and seeding specifications shall be applied in conformance with applicable specifications of Section 804 of PADOT Publication 408. Apply mulch in accordance with applicable specifications of Section 805 of PennDOT Publication 408.

SEEDING, LIMING & FERTILIZER TYPE	APPLICATION RATE	SEEDING DATES
TEMPORARY SEEDING		
Annual Rye Grass	**40 lb./ac.***	March 15–
Limestone	**1 ton/ac.**	October 15
Fertilizer (10-10-10)	**50 lb./ac.**	
Mulch (hay or straw)	**3 ton/ac.**	
PERMANENT SEEDING		
Perennial Ryegrass	**15 lb./ac.***	March 15–
Tall Fescue	**60 lb./ac.***	June 1
Annual Ryegrass	**10 lb./ac.***	
Limestone	**2 ton/ac.**	August 1–
Fertilizer (10-20-20)	**700 lb./ac.**	October 15
Slow Release Nitrogen Fertilizer (38-0-0 Ureaform Fertilizer)	**242 lb./ac.**	
Mulch (hay or straw)	**3 ton/ac.**	

*** Indicates quantity of Pure Live Seed**

__Temporary Stabilization & Permanent Stabilization__

a. Hay or straw mulch must be applied at 3.0 tons per acre.

b. Mulch with mulch control netting or erosion control blankets must be installed on all slopes 3:1 and steeper.

c. Straw mulch shall be applied in long strands, not chopped or finely broken.

__Silt Fence__ – Silt fence (Filter Fabric) may be used to control runoff from small disturbed areas when it is in the form of sheet flow, and the discharge is to a stable area. Only those fabric types specified for such use by the manufacturer should be used. Silt fence should be installed level to the slope with both ends of a fence section extending up the slope so that the bottom of the fence shall end at the top of the fence elevation. Silt fence location is shown on the Erosion and Sediment Control Plan of this drawing set.

__Rock Filter Outlet__ – Rock filter outlets are constructed of AASHTO No. 1 stone and AASHTO No. 57 stone. They are to be placed in line with the silt fence in areas of concentrated flow.

__Dry Well__ – The dry well is designed to retain runoff for an extended duration to allow sediment to settle out.

__Rock Construction Entrance__ – Rock construction entrances are constructed of a minimum 8" of AASHTO No. 1 rock on a PennDOT Class 2 geotextile fabric, the dimensions are provided on the detail shown on the Erosion and Sedimentation Control Details Sheet of the plan set. The rock construction entrance is located at all the access points to the site to prevent the tracking of mud onto paved streets. The locations of rock construction entrances are shown on the Erosion and Sedimentation Control Plans of this drawing set. Access to the site is not permitted through other locations.

__Riprap Apron__ – The riprap apron is to be constructed as shown on the detail sheet. This apron will reduce the velocity of water discharged from pipes and prevent erosion.

SOIL SYMBOLS/SERIES	HYDRIC SOILS CRITERIA: HYDRIC SOIL	HYDRIC CRITERIA CODE	MEETS SATURATION CRITERIA	MEETS FLOODING CRITERIA	MEETS PONDING CRITERIA
DdA Doylestown Silt Loam 0% – 3% SLOPES	YES	2	YES	YES	YES
UkB Urban Land-Chester Complex 0% – 8% SLOPES	NO	----	----	----	----

SOIL SYMBOLS/ SERIES	DEPTH TO THE TOP SEASONAL WATER TABLE	DEPTH TO RESTRICTIVE FEAURE	DWELLINGS WITH BASEMENTS	DWELLINGS WITHOUT BASEMENTS	SMALL COMMERCIAL BUILDINGS	LAND CAPABILITY	PRIME FARMLAND	HYDROLOGY CODE
DdA Doylestown Silt Loam 0% – 3% SLOPES	0 TO 6 Inches	60 TO 72 Inches (LITHIC BEDROCK)	VERY LIMITED	VERY LIMITED	VERY LIMITED	4w	NOT PRIME FARMLAND	D
UkB Urban Land-Chester Complex 0% – 8% SLOPES	About 0 Inches	10 TO 99 Inches (LITHIC BEDROCK)	--	--	--	8s	NOT PRIME FARMLAND	D

SOIL SURVEY STAFF, NATURAL RESOURCES CONSERVATION SERVICE, UNITED STATES DEPARTMENT OF AGRICULTURE. WEB SOIL SURVEY. AVAILABLE ONLINE AT HTTP://WEBSOILSURVEY.NRCS.USDA.GOV/.

Legend

Tract Boundary Line
Legal Right-of-Way
Existing Contour
Existing Index Contour
Existing Water Main
Existing Storm Sewer
Existing Treeline
Existing Treeline To Remain
Proposed Building Setback Line
Proposed Contour
Proposed Index Contour
Proposed Spot Elevation
Proposed Storm Sewer
Proposed Curb
Proposed Rip Rap
Limits of Disturbance
Soils Line
Existing Utility Pole
Reinforced Silt Fence
Temporary Rock Construction Entrance
Temporary Inlet Protection
Topsoil Stockpile

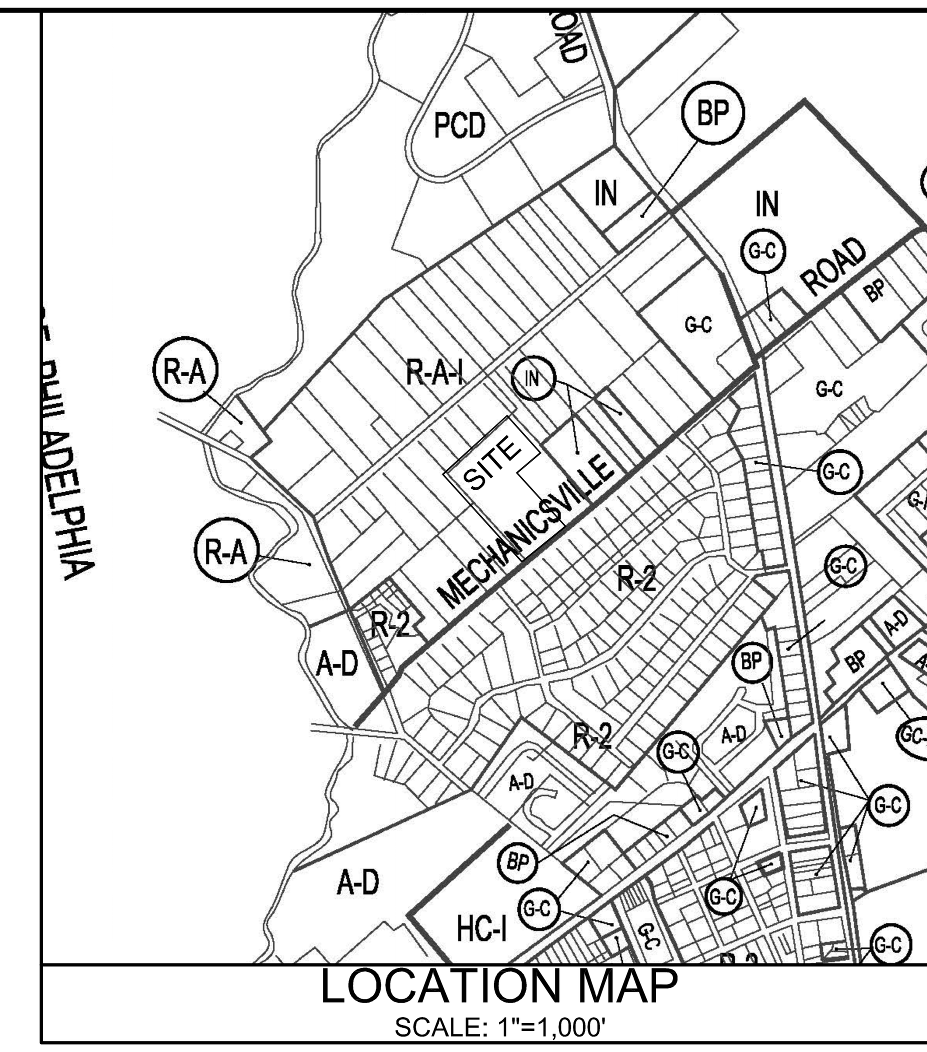

LOCATION MAP
SCALE: 1"=1,000'

SERIAL NO. 2016-2450730
CALL BEFORE YOU DIG!
PENNSYLVANIA LAW REQUIRES 3 WORKING DAYS NOTICE FOR CONSTRUCTION PHASE AND 10 WORKING DAYS IN DESIGN STAGE-STOP CALL
PENNSYLVANIA ONE CALL SYSTEM, INC.
1-800-242-1776

INFORMATION SHOWN ON THIS PLAN IS THE RESULT OF A PROFESSIONAL SERVICE RENDERED BY AND IS OWNED BY DUMACK ENGINEERING. REPRODUCTION OF THIS PLAN WITHOUT APPROVAL OF DUMACK ENGINEERING IS NOT PERMITTED. THE REPRODUCTION OF A COPY OF THIS PLAN FOR THE PURPOSE OF CREATING ADDITIONAL COPIES OR REVISING SAID PLAN SHALL, IN NO CIRCUMSTANCE, BE APPROVED. VIOLATION OF THIS RESTRICTION SHALL BE CONSIDERED A VIOLATION OF BOTH THE PROFESSIONAL CODE OF ETHICS AND A THEFT OF CORPORATE ASSETS, BOTH OF WHICH SHALL BE PROSECUTED TO THE FULLEST EXTENT OF CURRENT STATUTES.
THIS PLAN HAS BEEN SPECIFICALLY PREPARED FOR THE OWNER DESIGNATED HEREON, ANY MODIFICATION, REVISION, DUPLICATION OR USE WITHOUT THE WRITTEN CONSENT OF DUMACK ENGINEERING IS PROHIBITED. RELIANCE ON THIS PLAN FOR ANY PURPOSE OTHER THAN THAT WHICH IT IS INTENDED SHALL BE AT THE SOLE DISCRETION AND LIABILITY OF THE APPLICABLE PARTY.

THIS PROJECT HAS BEEN PREPARED FOR MUNICIPAL PURPOSES. ADDITIONAL INFORMATION MAY BE REQUIRED FOR CONSTRUCTION.

ALL DIMENSIONS MUST BE VERIFIED BY CONTRACTOR AND OWNER MUST BE NOTIFIED OF ANY DISCREPANCIES BEFORE PROCEEDING WITH THE WORK.

© – 2013, DUMACK ENGINEERING – ALL RIGHTS RESERVED

NOT VALID WITHOUT AN EMBOSSED SEAL OR SIGNATURE IN RED INK.

COMMONWEALTH OF PENNSYLVANIA — REGISTERED PROFESSIONAL — HEATH ALAN DUMACK — ENGINEER PE-051685-E

HEATH A. DUMACK, P.E. & P.L.S.
PA P.E. LICENSE No. PE-051685-E
PA P.L.S. LICENSE No. SU-054500-E

DUMACK ENGINEERING
A PROFESSIONAL CORPORATION
ESTABLISHED IN 1964
CIVIL - STRUCTURAL ENGINEERS & SURVEYORS

PENNS PARK OFFICE
677 DURHAM ROAD
P.O. BOX 487
PENNS PARK, PA 18943
PHONE: (215) 598-1230
FAX: (215) 598-1232

ROYERSFORD OFFICE
P.O. BOX 809
ROYERSFORD, PA 19468
PHONE:(610) 489-9449
FAX: (610) 489-9449

www.Dumack.com

REV No.	DATE	REVISION
1		
2		
3		
4		
5		
6		
7		
8		
9		
10		
11		
12		
13		
14		
15		
16		
17		
18		
19		
20		

PRELIMINARY AS FINAL
NOT FOR RECORDING

EXISTING PARCEL INFO:
T.M.P. No. 02-036-008
DEED BOOK: 2587 PAGE No. 1053
CURRENT ZONING: R-A-1

OWNER of RECORD:
SAMARPAN HINDU TEMPLE
2746 MECHANICSVILLE ROAD
BENSALEM, PA 19020

APPLICANT:
SAME AS ABOVE

GRAPHIC SCALE: 40 0 20 40

EROSION & CONTROL PLAN
2746 MECHANICSVILLE ROAD
BENSALEM TOWNSHIP
BUCKS COUNTY, PA

DRAWN BY: A.E.Y. CHECKED BY: H.A.D.
SCALE: 1"=40' PROJECT No: 5447
PLAN DATE: OCT. 5, 2016 SHEET No. 7 of 17

EROSION / SEDIMENT CONTROL PLAN: STANDARD NOTES

Stockpile heights must not exceed 35 feet; stockpile slopes must not exceed 2:l.

The operator/responsible person (O/RP) on site shall assure that the approved erosion and sediment control plan is properly and completely implemented.

Immediately upon discovering unforeseen circumstances posing the potential for accelerated erosion and/or sediment pollution, the O/RP shall implement appropriate Best Management Practices (BMPs) to eliminate the potential for accelerated erosion and/or sediment pollution.

The O/RP shall assure that an erosion and sediment control plan has been prepared, approved by the Bucks County Conservation District and is being implemented and maintained for all soil and/or rock spoil and borrow areas regardless of their locations.

All pumping of sediment–laden water shall be through a sediment control BMP such as a pumped water filter bag discharging over undisturbed areas.

A copy of the approved erosion and sediment control plan must be available on the project site at all times.

Erosion and sediment BMPs must be constructed, stabilized and functional before site disturbance begins within the tributary areas of those BMPs.

After final site stabilization has been achieved, temporary erosion and sediment BMP controls must be removed. Areas disturbed during the removal of the BMPs must be stabilized immediately.

At least seven (7) days before starting any earth disturbance activity, the O/RP shall invite all contractors involved in that activity, the landowner, all appropriate municipal officials, the erosion and sediment control plan designer and the Bucks County Conservation District to a pre–construction meeting. Also, at least three days before starting any earth disturbance activity, all contractors involved in that activity shall notify the Pennsylvania One–Call System Inc. at 1–800–242–1776 to determine any underground utilities locations.

Immediately after earth disturbance activity ceases, the O/RP shall stabilize any areas disturbed by the activity. During non–germinating periods, mulch must be applied at specified rates. Disturbed areas that are not at finished grade and which will be re–disturbed within one year must be stabilized in accordance with temporary vegetative stabilization specifications.

Disturbed areas that are at finished grade or which will not be re–disturbed within one year must be stabilized in accordance with permanent vegetative stabilization specifications.

An area shall be considered to have achieved final stabilization when it has a minimum uniform 70% (percent) vegetative or other permanent non–vegetative cover with a density sufficient to resist accelerated surface erosion and subsurface characteristics sufficient to resist sliding and other movements.

Upon the installation of temporary sediment basin riser(s), a qualified site representative shall conduct an immediate inspection of the riser(s), whereupon the Bucks County Conservation District shall be notified in writing that the riser is sealed (watertight).

At stream crossing, a 50–foot buffer shall be maintained. On buffers, clearings, sod disturbances and excavations, equipment traffic should be minimized. Activity such as stocking logs, burning cleared brush, discharging rainwater from trenches, welding pipe sections, refueling and maintaining equipment should be avoided within buffer zones.

Until a site is stabilized, all erosion and sediment BMPs must be maintained properly. Maintenance must include inspections of all erosion control BMPs after each runoff event and on a weekly basis. All preventative and remedial maintenance work, including cleanout, repair, replacement, re–grading, re–seeding, re–mulching and re–netting must be performed immediately. If erosion and sediment control BMPs fail to perform as expected, replacement BMPs, or modifications of those installed, will be required.

Sediment removed from BMPs shall be disposed of on–site in landscaped areas outside of steep slopes, wetlands, floodplains or drainage swales and immediately stabilized or placed in soil stockpiles and stabilized.

All building material and wastes must be removed from the site and recycled in accordance with DEP's Solid Waste Regulations (25 PA Code 260.1 et seq., 271.1 et seq., and 287.1 et seq.), and/or any additional local, state or federal regulations. No building materials (used or unused) or waste materials shall be burned, buried, dumped or discharged at the site.

SEEDING REQUIREMENTS

(TAKEN FROM 1992-3 AGRONOMY GUIDE, PENN STATE UNIVERSITY)
DURING THE NON-GROWING SEASONS MULCH ALONE MAY BE APPLIED, AT THE RATE OF 3 TONS/ACRE, TO DISTURBED AREAS.

TEMPORARY

1. APPLY AGRICULTURAL LIMESTONE, EQUIVALENT TO 50 % CALCIUM PLUS, MAGNESIUM OXIDES, AT A RATE OF 1 TON PER ACRE, PLUS FERTILIZER AT A RATE OF 50-50-50- (50 LBS N, 50 LBS. P205, 50 LBS. K20) PER ACRE.
2. WORK LIME AND FERTILIZER INTO THE SOIL TO A DEPTH OF 4 INCHES MINIMUM
3. INSPECT SEED BED JUST BEFORE SEEDING. IF TRAFFIC HAS LEFT THE SOIL COMPACTED, THE AREA MUST BE RETILLED.
4. SEEDING TYPES AND RATES:

ANNUAL RYEGRASS	40 LB/AC
SPRING OATS (WILL WINTER KILL)	96 LB/AC (3 BU.)
WINTER WHEAT, OR	180 LB/AO (3 BU.)
WINTER RYE	166 LB/AC (3 BU.)

5. MULCHING (SEE BELOW).

PERMANENT

1. FOR BEST RESULTS, PERMANENT SEEDING SHOULD BE MADE IN THE SPRING (MARCH, APRIL AND EARLY MAY). FALL SEEDING CAN ALSO BE MADE, REALIZE THAT GRASSES REQUIRE AT LEAST 4-6 WEEKS OF GROWTH PRIOR TO HARD FROSTS. DO NOT SEED DURING HOT SUMMER MONTHS.
2. THE SUBSOIL SHALL BE GRADED AND UNIFORMLY COMPACTED SO THAT IT WILL BE PARALLEL TO PROPOSED FINISHED GRADE. THE SUBGRADE MATERIAL SHALL BE LOOSENED AND MIXED TO A DEPTH OF 2 TO 4 INCHES AND ALL STONES OVER TWO INCHES IN SIZE, STICKS AND RUBBISH REMOVED. NO HEAVY OBJECTS EXCEPT LAWN ROLLERS SHALL BE MOVED OVER LAWN AREAS AFTER THE SUBGRADE SOIL HAS BEEN PREPARED, UNLESS THE SUBGRADE SOIL IS AGAIN GRADED AND LOOSENED AS SPECIFIED ABOVE BEFORE TOPSOIL IS SPREAD.
3. FINISHED GRADING - LAWN AREAS. AFTER THE SUBGRADE SOIL HAS BEEN PREPARED, 4" MIN. TOPSOIL HASS BE SPEAD EVENLY THERON AND LIGHTLY COMPACED. NO TOPSOIL SHALL BBBE SPREAD IN A FROZEN OR MUDDY CONDITION. AREAS TO BE SEEDED SHALL BE BROUGHT TO FINISHED GRADE AND SMOOTHED. ALLOWANCE FOR SETTLEMENT SHALL BE MADE.
4. GRASS SEED
GRASS SEED SHALL BE FRESH, RECLEANED SEED OF THE LATEST CROP, DELIVERED TO THE SITE IN THE ORIGINAL, UNOPENED CONTAINERS WHICH SHALL BEAR THE VENDOR'S NAME AND GUARANTEED ANALYSIS. GRASS SEED SHALL BE MIXED IN THE FOLLOWING PROPORTIONS AND SHALL CONFORM TO THE FOLLOWING PERCENTAGES OF PURITY AND GERMINATION.

MIXTURE	BY WEIGHT %	PURITY %	GERMINATION %
KENTUCKY BLUEGRASS	70%	85%	75%
CREEPING RED FESCUE	20%	97%	85%
"TURF-TYPE"-PERENNIAL RYE-GRASS	10%	98%	90%

5. REMOVE FOR A DEPTH OF 6 INCHES ALL STONES ONE INCH OR LARGER IN ANY DIMENSION. REMOVE ALL OTHER DEBRIS SUCH AS WIRE, CABLE, TREE MATERIAL, AND DISPOSE POPERLY. DO NOT BURY ON-SITE.
6. APPLY AGRICULTURAL LIMESTONE AT A RATE OF 2 TONS PER ACRE. APPLY FERTILIZER AT THE RATE OF 50-100-100 PER ACRE.
7. WORK LIME AND FERTILIZER INTO THE SOIL TO A DEPTH OF 8 INCHES. THE FINAL OPERATION WILL CONFORM TO THE GERERAL CONTOUR.
8. INSPECT SEEDBED JUST BEFORE SEEDING. IF TRAFFIC HAS LEFT THE SOIL COMPACTED, THE AREA MUST BE RETILLED AND FIRMED.
9. APPLY THE FINAL SEED MIXTURE AT THE RATE OF 5 LBS PER 1,000 S.F. TO DEPT OF ¼" TO ½" USING MECHANICAL SEEDER. FIRM SEED WITH ROLLER OR LIGHT DRAG.
10. MULCHING (SEE BELOW)
11. PERMANENT SEEDING MAY ALSO BE APPLIED BY HYDROSEEDING, AT A RATE OF 1,000 GAL/ACRE.

MULCHING

1. MULCH WITH UNROTTEN GRASS HAY, OR SMALL CERAL STRAW AT THE RATE OF 3 TONS PER ACRE. HAY IS RECOMMENDED FOR SLOPES.

LIQUID MULCH-BINDERS

1. APPLICATION SHOULD BE HEAVIER AT EDGES (WHERE WIND CATCHES THE MULCH), IN VALLEYS, AND AT CRESTS OF BANKS. REMAINDER OF ARE SHOULD BE UNIFORM IN APPEARANCE.
2. ONE OF THE FOLLOWING MAY BE USED:
A. EMULSIFIED ASPHALT -(SS-1, CSS-1, CMS-2, MS-2RS-1, RS-2, CRS-1 AND CRS-2)
B. CUTBACK ASPHALT - RAPID CURNING (RC-70, RC-250 AND RC-800) OR MEDIUM CURING (MC-250 OR MC-800). APPLY AT A MINIMUM RATE OF 150 GAL/AC, MORE ON STEEP/LONG SLOPES.
C. SYNTHETIC OR ORGANIC BINDERS - CURASOL, DCA-70, PETRO-SET, AND TERRA-TACK OR EQUAL MAY BE USEDAT RATES RECOMMENDED BY THE MANUFACTURER TO ANCHOR MULCH MATERIALS.

TEMPORARY CONTROL MEASURES

TEMPORARY CONTROL MEASURES WHICH WERE PREVIOUSLY DISCUSSED ARE AS FOLLOWS:

1. SILT FENCE BARRIERS SHALL BE PROVIDED TO RETARD RUNOFF AND COLLECT SEDIMENT.
2. TEMPORARY SEEDING OF TOPSOIL STOCKPILE AREA AND BARE EARTH SHALL BE PROVIDED FOR AREAS, WHICH WILL REMAIN UNSTABILIZED.
3. TEMPORARY STONE BALLAST TIRE CLEANERS SHALL BE PROVIDED AT CONSTRUCTION ENTRANCES.
4. SHOULD WORK BE EXTENDED INTO WINTER MONTHS, AND IF TEMPORARY SEEDING IS NOT FEASIBLE, EROSION MAY BE CONTROLLED BY PLACING STRAW MULCH OVER DISTURBED AREAS. THIS MULCH WILL BE MAINTAINED UNTIL WEATHER CONDITIONS PERMIT SEEDING.
5. INLET FILTERS TO FILTER RUNOFF PRIOR TO STORM FLOWS ENTERING THE STORM SEWER SYSTEM.

PERMANENT CONTROL MEASURES

PERMANENT CONTROL MEASURES WHICH ARE DESIGNED TO CONTROL SEDIMENT AND EROSION AND RUNOFF FROM THE SITE ARE AS FOLLOWS:

1. PAVED STREETS, DRIVEWAYS, INLETS AND STORM SEWER PIPES.
2. ALL LAWN AREAS SHALL BE ADEQUATELY SEEDED AND STABILIZED TO PROVIDE PERMANENT CONTROL OF EROSION AFTER COMPLETION OF CONSTRUCTION. SEE STABILIZATION DEFINITION.

STABILIZATION DEFINITION

AN AREA WILL BE CONSIDERED TO HAVE ACHIEVED PERMANENT STABILIZATION WHEN ALL PERMANENT CONTROL MEASURES/FACILITIES HAVE BEEN COMPLETED AND ARE OPERATIONAL, TEMPORARY CONTROL MEASURES/FACILITIES ARE REMOVED, AND ALL DISTURBED AREAS MEET THE FOLLOWING FINAL STABILIZATION CRITERIA:
A MINIMUM OF 70% UNIFORM PERENNIAL VEGETATIVE COVER OR OTHER PERMANENT NON-VEGETATIVE COVER WITH A DENSITY SUFFICIENT TO RESIST ACCELERATED SURFACE EROSION AND SUBSURFACE CHARACTERISTICS SUFFICIENT TO RESIST SLIDING OR OTHER MOVEMENTS.

SOIL RESOLUTIONS PER SOIL LIMITATIONS

ACIDIC SOILS
TOPSOIL SHALL BE TESTED FOR PH AND LIMED TO OBTAIN A PH OF 7.0 TO 7.5.

WET SOILS
TRENCHES SHALL BE PUMPED TO KEEP THEM DRY. PUMPED WATER SHALL BE FILTERED THROUGH A DESILTING BASIN OR PUMPED TO A SEDIMENT TRAP OR BASIN. DETENTION BASINS, SEDIMENT BASINS AND SEDIMENT TRAPS CONSTRUCTED IN WET SOILS SHALL BE PUMPED TO A DESILTING STRUCTURE UNTIL THE OUTLET STRUCTURE OR RISER PIPE IS INSTALLED.

WINTER GRADING
WINTER GRADING SHALL BE DONE IN A CAREFUL MANNER. EXTRA STABILIZATION METHODS MAY BE NEEDED TO STABILIZE DISTURBED EARTH UNTIL THE GROWING SEASON. SEE THE GENERAL EROSION CONTROL NOTES ABOUT WINTER GRADING CONCERNS.

BEDROCK
BLASTING MAY BE NECESSARY DUE TO THE STONY CHARACTERISTICS OF THE PENN SERIES SOILS. IN DISTURBED AREAS WHERE SEEDING IS THE METHOD OF PERMANENT STABILIZATION AND THE DEPTH TO BEDROCK IS LESS THAN 6' BELOW THE FINAL GRADING, UNDERCUT THE ROCK AND PLACE 6" OF TOPSOIL ABOVE IT AND STABILIZE.

EMBANKMENTS AND DIVERSIONS
EMBANKMENTS AND DIVERSIONS SHALL BE CONSTRUCTED OF SOILS THAT CAN BE COMPACTED AND ARE NOT HIGHLY PERMEABLE. EXTRA NON-HYDRIC CLAY AND CRUSHED SHALE CAN BE ADDED TO HELP WITH THE STABILITY AND PERMEABILITY

CLEAN FILL AND ENVIRONMENTAL DUE DILIGENCE. IF THE SITE WILL HAVE EXCESS FILL THAT WILL NEED TO BE EXPORTED TO AN OFF SITE LOCATION, THE RESPONSIBILITY OF CLEAN FILL DETERMINATION AND ENVIRONMENTAL DUE DILIGENCE RESTS ON THE APPLICANT. THIS INFORMATION SHOULD BE COMPLETED PRIOR TO SUBMITTING A PERMIT APPLICATION. IF ALL CUT AND FILL MATERIALS WILL BE USED ON THE SITE, A CLEAN FILL DETERMINATION IS NOT REQUIRED BY THE OPERATOR UNLESS THERE IS A BELIEF THAT A SPILL OR RELEASE OF A REGULATED SUBSTANCE OCCURRED ON SITE. APPLICANTS AND/OR OPERATORS MUST USE ENVIRONMENTAL DUE DILIGENCE TO ENSURE THAT THE FILL MATERIAL ASSOCIATED WITH THIS PROJECT QUALIFIES AS CLEAN FILL. DEFINITIONS OF CLEAN FILL AND ENVIRONMENTAL DUE DILIGENCE ARE PROVIDED BELOW. ALL FILL MATERIAL MUST BE USED IN ACCORDANCE WITH THE DEPARTMENT'S POLICY *"MANAGEMENT OF FILL"*, DOCUMENT NUMBER 258-2182-773. A COPY OF THIS POLICY IS AVAILABLE ONLINE AT WWW.DEPWEB.STATE.PA.US <HTTP://WWW.DEP.STATE.PA.US/>. UNDER THE HEADING QUICK ACCESS ON THE LEFT SIDE OF THE SCREEN, CLICK ON "FORMS AND PUBLICATIONS." ON THE LEFT SIDE OF THE SCREEN CLICK ON "TECHNICAL GUIDANCE DOCUMENTS - FINAL." THEN TYPE THE DOCUMENT NUMBER 258-2182-773 INTO THE SEARCH WINDOW AND CONDUCT THE SEARCH. CLICK ON "MANAGEMENT OF FILL."

CLEAN FILL IS DEFINED AS: UNCONTAMINATED, NON-WATER SOLUBLE, NON-DECOMPOSABLE, INERT, SOLID MATERIAL. THE TERM INCLUDES SOIL, ROCK, STONE, DREDGED MATERIAL, USED ASPHALT, AND BRICK, BLOCK OR CONCRETE FROM CONSTRUCTION AND DEMOLITION ACTIVITIES THAT IS SEPARATE FROM OTHER WASTE AND IS RECOGNIZABLE AS SUCH. THE TERM DOES NOT INCLUDE MATERIALS PLACED IN OR ON THE WATERS OF THE COMMONWEALTH UNLESS OTHERWISE AUTHORIZED. (THE TERM "USED ASPHALT" DOES NOT INCLUDE MILLED ASPHALT OR ASPHALT THAT HAS BEEN PROCESSED FOR RE-USE.)

CLEAN FILL AFFECTED BY A SPILL OR RELEASE OF A REGULATED SUBSTANCE : FILL MATERIALS AFFECTED BY A SPILL OR RELEASE OF A REGULATED SUBSTANCE STILL QUALIFIES AS CLEAN FILL PROVIDED THE TESTING REVEALS THAT THE FILL MATERIAL CONTAINS CONCENTRATIONS OF REGULATED SUBSTANCES THAT ARE BELOW THE RESIDENTIAL LIMITS IN TABLES FP-1A AND FP-1B FOUND IN THE DEPARTMENTS POLICY *"MANAGEMENT OF FILL"*.
ANY PERSON PLACING CLEAN FILL THAT HAS BEEN AFFECTED BY A SPILL OR RELEASE OF A REGULATED SUBSTANCE MUST USE FORM FP-001 TO CERTIFY THE ORIGIN OF THE FILL MATERIAL AND THE RESULTS OF THE ANALYTICAL TESTING TO QUALIFY THE MATERIAL AS CLEAN FILL. FORM FP-001 MUST BE RETAINED BY THE OWNER OF THE PROPERTY RECEIVING THE FILL. A COPY OF FORM FP-001 CAN BE FOUND AT THE END OF THESE INSTRUCTIONS.

ENVIRONMENTAL DUE DILIGENCE : *INVESTIGATIVE TECHNIQUES, INCLUDING, BUT NOT LIMITED TO, VISUAL PROPERTY INSPECTIONS, ELECTRONIC DATA BASE SEARCHES, REVIEW OF PROPERTY OWNERSHIP, REVIEW OF PROPERTY USE HISTORY, SANBORN MAPS, ENVIRONMENTAL QUESTIONNAIRES, TRANSACTION SCREENS, ANALYTICAL TESTING, ENVIRONMENTAL ASSESSMENTS OR AUDITS*. **ANALYTICAL TESTING IS NOT A REQUIRED PART OF DUE DILIGENCE UNLESS VISUAL INSPECTION AND/OR REVIEW OF THE PAST LAND USE OF THE PROPERTY INDICATES THAT THE FILL MAY HAVE BEEN SUBJECTED TO A SPILL OR RELEASE OF REGULATED SUBSTANCE.** IF THE FILL MAY HAVE BEEN AFFECTED BY A SPILL OR RELEASE OF A REGULATED SUBSTANCE, IT MUST BE TESTED TO DETERMINE IF IT QUALIFIES AS CLEAN FILL. TESTING SHOULD BE PERFORMED IN ACCORDANCE WITH APPENDIX A OF THE DEPARTMENTS POLICY *"MANAGEMENT OF FILL"*. FILL MATERIAL THAT DOES NOT QUALIFY AS CLEAN FILL IS REGULATED FILL. REGULATED FILL IS WASTE AND MUST BE MANAGED IN ACCORDANCE WITH THE DEPARTMENT'S MUNICIPAL OR RESIDUAL WASTE REGULATIONS BASED ON 25 PA. CODE CHAPTERS 287 RESIDUAL WASTE MANAGEMENT OR 271 MUNICIPAL WASTE MANAGEMENT, WHICHEVER IS APPLICABLE.

NOTES:

1. COMPACTED EARTH FILLS SHALL BE PLACED IN EIGHT INCH LAYERS, TO 95 % MODIFIED PROCTOR DENSITY ACCORDING TO ASTM-D-1557 SPECIFICATIONS AND THE COMPACTION CHECKED BY A PROFESSIONAL ENGINEER.
2. COMPACTED EARTH FILLS SHALL BE USED UNDER ALL BUIDLING SLAB AND PAVED AREAS WHERE FILL IS REQUIRED. THE MATERIAL IN THESE AREAS SHALL BE APPROVED BY A PROFESSIONAL ENGINEER. MATERIAL IMPORTED FOR USE AS FILL UNDER BUILDINGS OR PAVED AREAS SHALL BE APPROVED BY A PROFESSIOANL ENGINEER PRIOR TO IMPORTING SAID MATERIAL.
3. TOPSOIL SHALL NOT BE USED AS FILL UNDER BUILDINGS OR PAVED AREAS. EXISTING TOPSOIL SHALL BE REMOVED WHERE FILL IS REQUIRED BENEATH BUILDING AND PAVED AREAS AND STOCKPILED FOR FINAL GRADING.

SLOPE INSTALLATION

NORTH AMERICAN GREEN

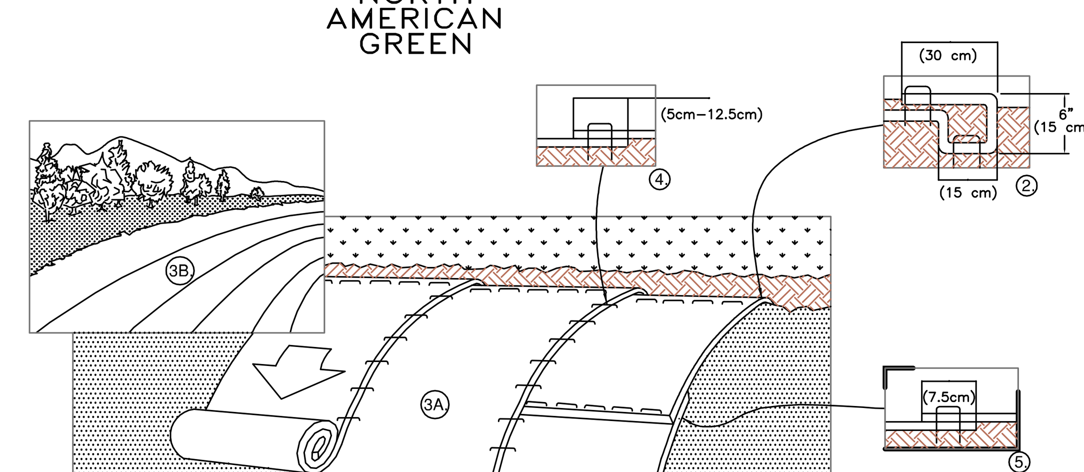

1. PREPARE SOIL BEFORE INSTALLING BLANKETS, INCLUDING ANY NECESSARY APPLICATION OF LIME, FERTILIZER, AND SEED. NOTE: WHEN USING CELL–O–SEED DO NOT SEED PREPARED AREA. CELL–O–SEED MUST BE INSTALLED WITH PAPER SIDE DOWN.
2. BEGIN AT THE TOP OF THE SLOPE BY ANCHORING THE BLANKET IN A 6" (15cm) DEEP X 6" (15cm) WIDE TRENCH WITH APPROXIMATELY 12" (30cm) OF BLANKET EXTENDED BEYOND THE UP–SLOPE PORTION OF THE TRENCH. ANCHOR THE BLANKET WITH A ROW OF STAPLES/STAKES APPROXIMATELY 12" (30cm) APART IN THE BOTTOM OF THE TRENCH. BACKFILL AND COMPACT THE TRENCH AFTER STAPLING. APPLY SEED TO COMPACTED SOIL AND FOLD REMAINING 12" (30cm) PORTION OF BLANKET BACK OVER SEED AND COMPACTED SOIL. SECURE BLANKET OVER COMPACTED SOIL WITH A ROW OF STAPLES/STAKES SPACED APPROXIMATELY 12" (30cm) APART ACROSS THE WIDTH OF THE BLANKET.
3. ROLL THE BLANKETS (A.) DOWN OR (B.) HORIZONTALLY ACROSS THE SLOPE. BLANKETS WILL UNROLL WITH APPROPRIATE SIDE AGAINST THE SOIL SURFACE. ALL BLANKETS MUST BE SECURELY FASTENED TO SOIL SURFACE BY PLACING STAPLES/STAKES IN APPROPRIATE LOCATIONS AS SHOWN IN THE STAPLE PATTERN GUIDE. WHEN USING OPTIONAL DOT SYSTEM™, STAPLES/STAKES SHOULD BE PLACED THROUGH EACH OF THE COLORED DOTS CORRESPONDING TO THE APPROPRIATE STAPLE PATTERN.
4. THE EDGES OF PARALLEL BLANKETS MUST BE STAPLED WITH APPROXIMATELY 2"–5" (5cm–12.5cm) OVERLAP DEPENDING ON BLANKET TYPE. TO ENSURE PROPER SEAM ALIGNMENT, PLACE THE EDGE OF THE OVERLAPPING BLANKET (BLANKET BEING INSTALLED ON TOP) EVEN WITH THE COLORED SEAM STITCH™ ON THE PREVIOUSLY INSTALLED BLANKET.
5. CONSECUTIVE BLANKETS SPLICED DOWN THE SLOPE MUST BE PLACED END OVER END (SHINGLE STYLE) WITH AN APPROXIMATE 3" (7.5cm) OVERLAP. STAPLE THROUGH OVERLAPPED AREA, APPROXIMATELY 12" (30cm) APART ACROSS ENTIRE BLANKET WIDTH.

NOTE:
1. IN LOOSE SOIL CONDITIONS, THE USE OF STAPLE OR STAKE LENGTHS GREATER THAN 6" (15cm) MAY BE NECESSARY TO PROPERLY SECURE THE BLANKETS.
2. TO BE UTILIZED ON ALL CREATED SLOPES OF 4:1 OR GREATER.

EROSION CONTROL MATTING DETAIL

NOT TO SCALE

STANDARD CONSTRUCTION DETAIL #4-16
Filter Bag Inlet Protection - Type M

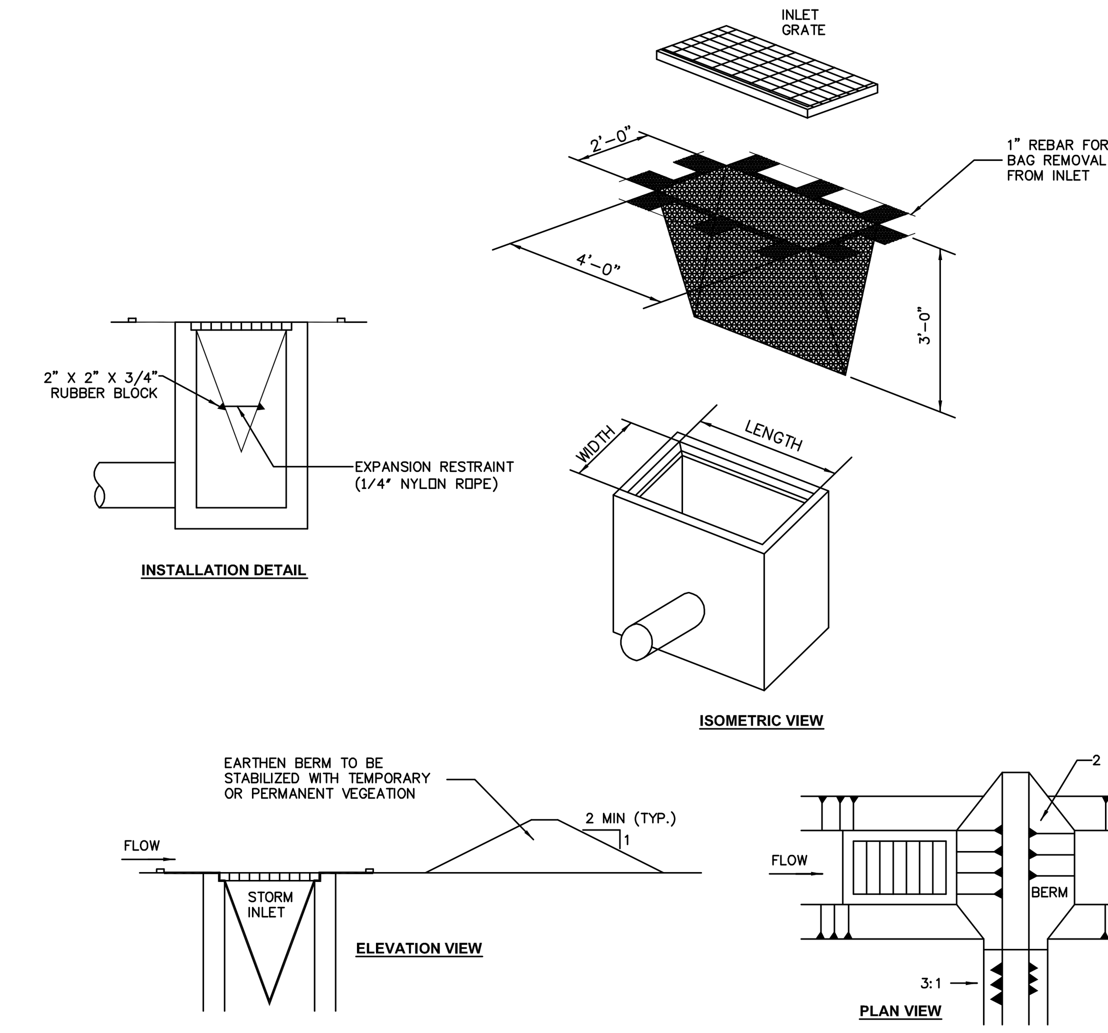

Maximum Drainage Area = 1/2 acre.

Inlet protection shall not be required for inlet tributary to sediment basin or trap. Berms shall be required for all installations.

Rolled earthen berm in roadway shall be maintained until roadway is stoned. Road subbase berm on roadway shall be maintained until roadway is paved. Earthen berm in channel shall be maintained until permanent stabilization is completed or to remain permanently.

At a minimum, the fabric shall have a minimum grab tensile strength of 120 lbs., a minimum burst strength of 200 psi, and a minimum trapezoidal tear strength of 50 lbs. Filter bags shall be capable of trapping all particles not passing a No. 40 sieve.

Inlet filter bags shall be inspected on a weekly basis and after each runoff event. Bags shall be emptied and rinsed or replaced when half full or when flow capacity has been reduced so as to cause flooding or bypassing of the inlet. Damaged or clogged bags shall be replaced. A supply shall be maintained on site for replacement of bags. All needed repairs shall be initiated immediately after the inspection. Dispose accumulated sediment as well as all used bags according to the plan notes.

DO NOT USE ON MAJOR PAVED ROADWAYS WHERE PONDING MAY CAUSE TRAFFIC HAZARDS

STANDARD CONSTRUCTION DETAIL #3-16
Pumped Water Filter Bag

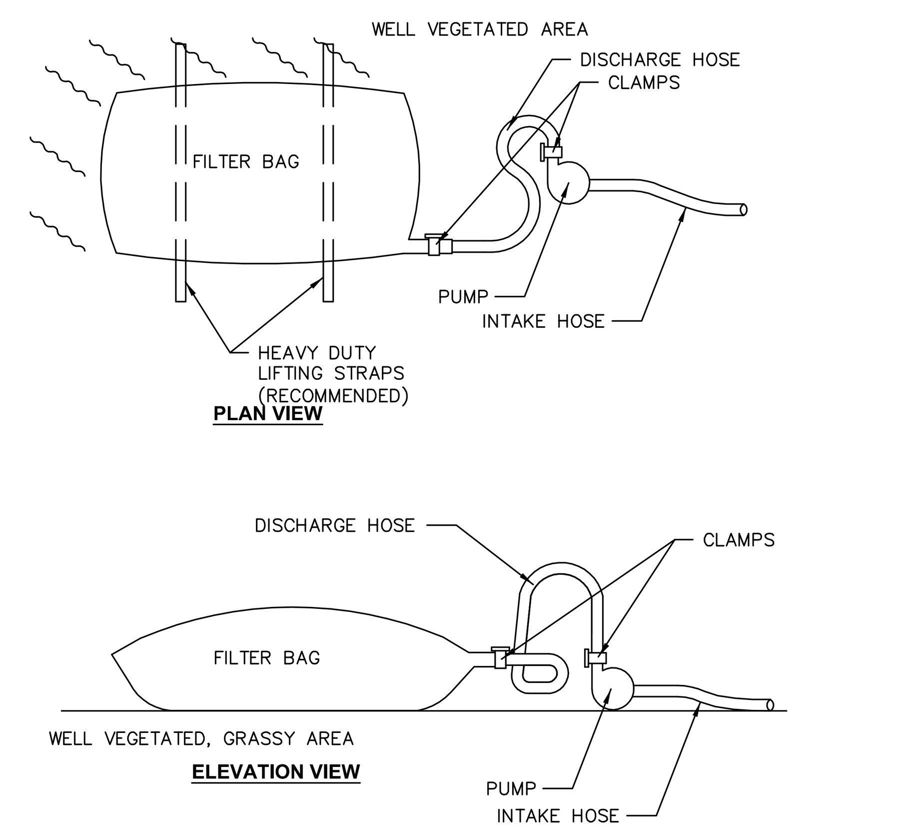

Low volume filter bags shall be made from non-woven geotextile material sewn with high strength, double stitched "J" type seams. They shall be capable of trapping particles larger than 150 microns. High volume filer bags shall be made from woven geotextiles that meet the following standards:

Property	Test Method	Minimum Standard
Avg. Wide Width Strength	ASTM D-4884	60 LB/IN
Grab Tensile	ASTM D-4632	205 LB
Puncture	ASTM D-4833	110 LB
Mullen Burst	ASTM D-3786	350 psi
UV Resistance	ASTM d-4355	70%
AOS % Retained	ASTM D-4751	80 Sieve

A suitable means of accessing the bag with machinery required for disposal purposes shall be provided. Filter bags shall be replaced when they become ½ full of sediment. Spare bags shall be kept available for replacement of those that have failed or are filled. Bags shall be placed on straps to facilitate removal unless lags come with lifting straps already attached.

Bags shall be located in well-vegetated (grassy) area, and discharge onto stable, erosion resistant areas. Where this is not possible, a geotextile underlayment and flow path shall be provided. Bags may be placed on filter stone to increase discharge capacity. Bags shall not be placed on slopes greater than 5%. For slopes exceeding 5%, clean rock or other non-erodible and non-polluting material may be placed under the bag to reduce slope steepness.

No downslope sediment barrier is required for most installations. Compost berm or compost filter sock shall be installed below bags located in HQ or EV watersheds, within 50 feet of any receiving surface water or where grassy area id not available.

The pump discharge hose shall be inserted into the bags in the manner specified by the manufacturer and securely clamped. A piece of PVC pipe is recommended for this purpose.

The pumping rate shall be no greater than 750 gpm or ½ the maximum specified by the manufacturer, whichever is less. Pump intakes shall be floating and screened.

Filter bags shall be inspected daily. If any problem is detected, pumping shall cease immediately and not resume until the problem is corrected.

STANDARD CONSTRUCTION DETAIL #3-1

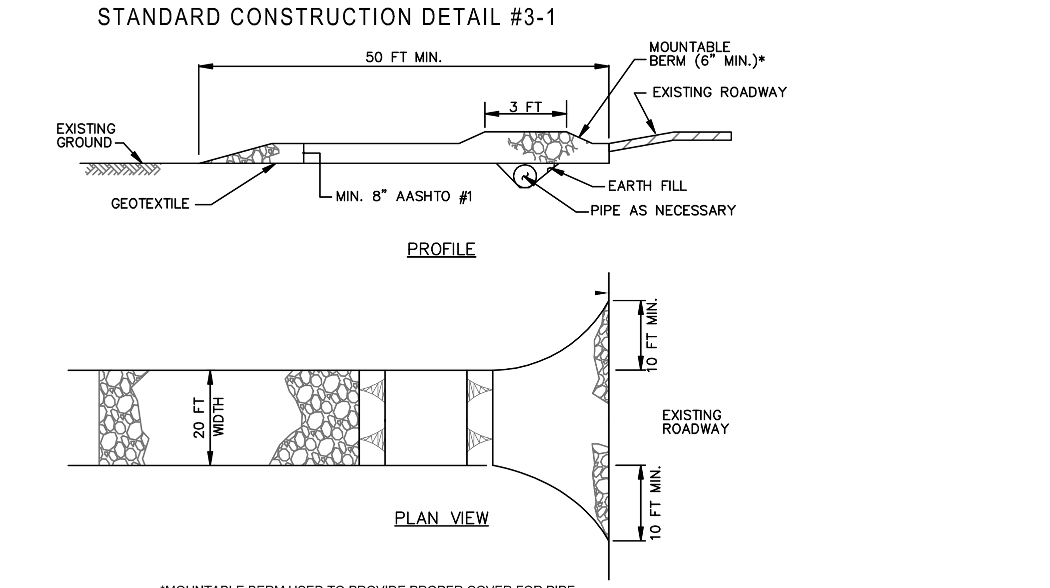

"MOUNTABLE BERM USED TO PROVIDE PROPER COVER FOR PIPE

Remove topsoil prior to installation of rock construction entrance. Extend rock over full width of entrance.

Runoff shall be diverted from roadway to a suitable sediment removal BMP prior to entering rock construction entrance.

Mountable berm shall be installed wherever optional culvert pipe is used and proper pipe cover as specified by manufacturer is not otherwise provided. Pipe shall be sized appropriately for size of ditch being crossed.

MAINTENANCE: Rock Construction Entrance thickness shall be constantly maintained to the specified dimensions by adding rock. A stockpile shall be maintained on site for this purpose. All sediment deposited on paved roadways shall be removed and returned to the construction site immediately. If excessive amounts of sediment are being deposited on roadway, extend length of rock construction entrance by 50 foot increments until condition is alleviated or install wash rack. Washing the roadway or sweeping the deposits into roadway ditches, sewers, culverts, or other drainage courses is not acceptable.

STANDARD CONSTRUCTION DETAIL #4-6
Rock Filter Outlets

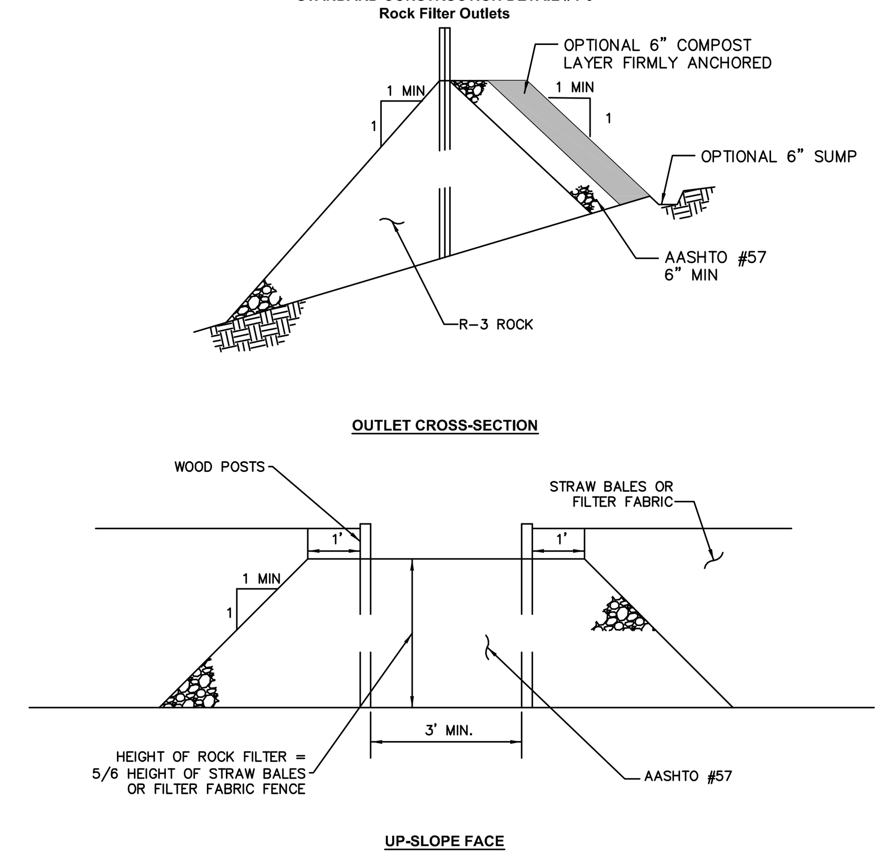

A rock filter outlet shall be installed where failure of a silt fence or straw bale barrier has occurred due to concentrated flow. Anchored compost layer shall be used on upslope face in HQ and EV watersheds.

Sediment must be removed when accumulations reach 1/3 the height of the outlet.

STANDARD CONSTRUCTION DETAIL #28
Filter Bag Inlet Protection
Curbed Roadway

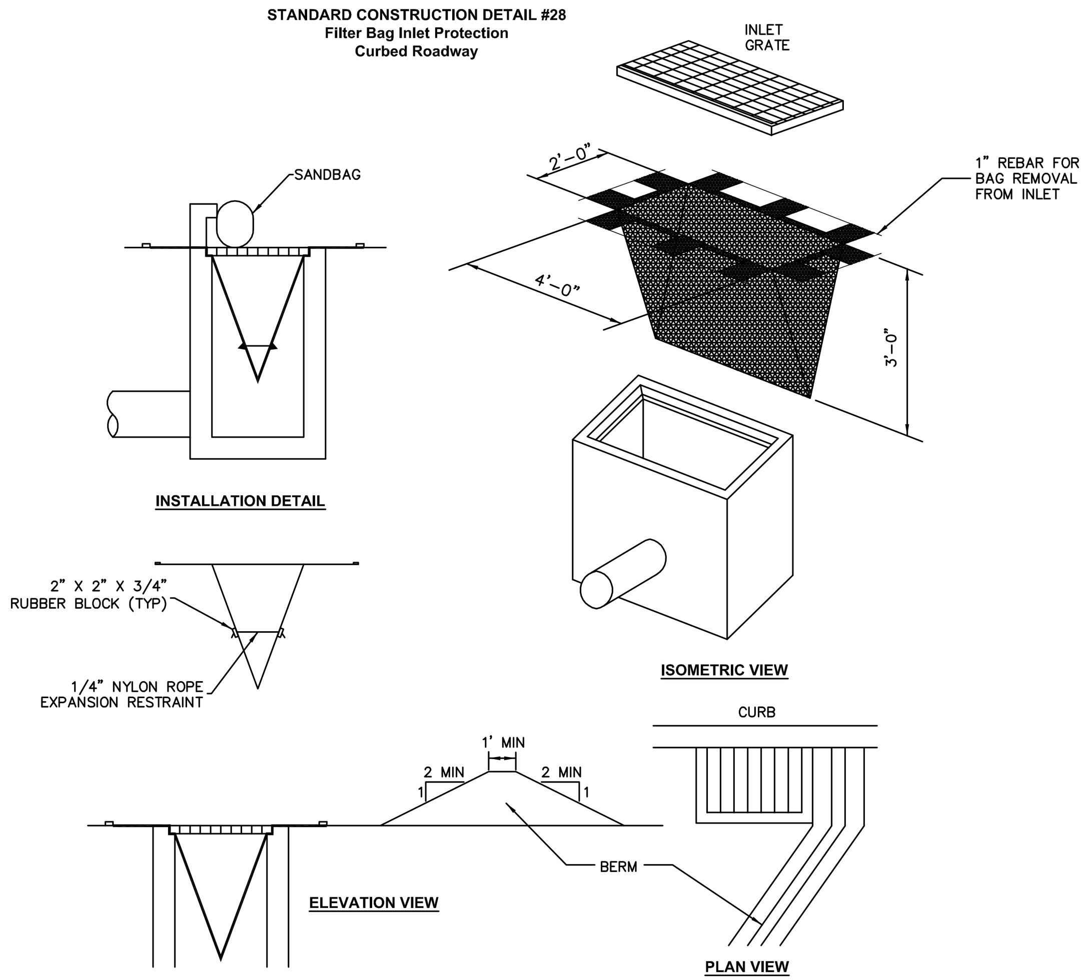

Maximum Drainage Area = 1/2 acre.
Inlet protection is not required for inlet tributary to sediment basin or trap. Berms required for all installations.

Earthen berm shall be maintained until roadway is stoned. Road subbase berm shall be maintained until roadway is paved.

Six inch minimum height asphalt berm shall be maintained until roadway surface receives final coat.

DO NOT USE ON MAJOR PAVED ROADWAYS WHERE PONDING MAY CAUSE TRAFFIC HAZARDS

SERIAL NO. 2016–2450730
CALL BEFORE YOU DIG!
PENNSYLVANIA LAW REQUIRES 3 WORKING DAYS NOTICE FOR CONSTRUCTION PHASE AND 10 WORKING DAYS IN DESIGN STAGE–STOP CALL
PENNSYLVANIA ONE CALL SYSTEM, INC.
1–800–242–1776

INFORMATION SHOWN ON THIS PLAN IS THE RESULT OF A PROFESSIONAL SERVICE RENDERED BY AND IS OWNED BY DUMACK ENGINEERING. REPRODUCTION OF THIS PLAN WITHOUT APPROVAL OF DUMACK ENGINEERING IS NOT PERMITTED. THE REPRODUCTION OF A COPY OF THIS PLAN FOR THE PURPOSE OF CREATING ADDITIONAL COPIES OR REVISING SAID PLAN SHALL, IN NO CIRCUMSTANCE, BE APPROVED. VIOLATION OF THIS RESTRICTION SHALL BE CONSIDERED A VIOLATION OF BOTH THE PROFESSIONAL CODE OF ETHICS AND A THEFT OF CORPORATE ASSETS, BOTH OF WHICH SHALL BE PROSECUTED TO THE FULLEST EXTENT OF CURRENT STATUTES.
THIS PLAN HAS BEEN SPECIFICALLY PREPARED FOR THE OWNER DESIGNATED HEREON, ANY MODIFICATION, REVISION, DUPLICATION OR USE WITHOUT THE WRITTEN CONSENT OF DUMACK ENGINEERING IS PROHIBITED. RELIANCE ON THIS PLAN FOR ANY PURPOSE OTHER THAN THAT WHICH IT IS INTENDED SHALL BE AT THE SOLE DISCRETION AND LIABILITY OF THE APPLICABLE PARTY.

THIS PROJECT HAS BEEN PREPARED FOR MUNICIPAL PURPOSES. ADDITIONAL INFORMATION MAY BE REQUIRED FOR CONSTRUCTION.

ALL DIMENSIONS MUST BE VERIFIED BY CONTRACTOR AND OWNER MUST BE NOTIFIED OF ANY DISCREPANCIES BEFORE PROCEEDING WITH THE WORK.

© – 2013, DUMACK ENGINEERING – ALL RIGHTS RESERVED

NOT VALID WITHOUT AN EMBOSSED SEAL OR SIGNATURE IN RED INK.

COMMONWEALTH OF PENNSYLVANIA – REGISTERED PROFESSIONAL – HEATH ALAN DUMACK – ENGINEER – PE-051685-E

HEATH A. DUMACK, P.E. & P.L.S.
PA P.E. LICENSE No. PE–051685–E
PA P.L.S. LICENSE No. SU–054500–E

DUMACK ENGINEERING
A PROFESSIONAL CORPORATION
ESTABLISHED IN 1964
CIVIL - STRUCTURAL ENGINEERS & SURVEYORS

PENNS PARK OFFICE
677 DURHAM ROAD
P.O. BOX 487
PENNS PARK, PA 18943
PHONE: (215) 598-1230
FAX: (215) 598-1232

ROYERSFORD OFFICE
P.O. BOX 809
ROYERSFORD, PA 19468
PHONE:(610) 489-9449
FAX: (610) 489-9449

www.Dumack.com

REV No.	DATE	REVISION
1		
2		
3		
4		
5		
6		
7		
8		
9		
10		
11		
12		
13		
14		
15		
16		
17		
18		
19		
20		

PRELIMINARY AS FINAL
NOT FOR RECORDING

EXISTING PARCEL INFO:
T.M.P. No. 02–036–008
DEED BOOK: 2587 PAGE No. 1053

CURRENT ZONING: R–A–1

OWNER of RECORD:
SAMARPAN HINDU TEMPLE
2746 MECHANICSVILLE ROAD
BENSALEM, PA 19020

APPLICANT:
SAME AS ABOVE

0
GRAPHIC SCALE

EROSION & CONTROL NOTES & DETAILS
2746 MECHANICSVILLE ROAD
BENSALEM TOWNSHIP
BUCKS COUNTY, PA

DRAWN BY: A.E.Y.	CHECKED BY: H.A.D.
SCALE: N.T.S.	PROJECT No: 5447
PLAN DATE: OCT. 5, 2016	SHEET No. 8 of 17

STANDARD CONSTRUCTION DETAIL #33
Riprap Aprons at Pipe Outlets with Flared End Sections

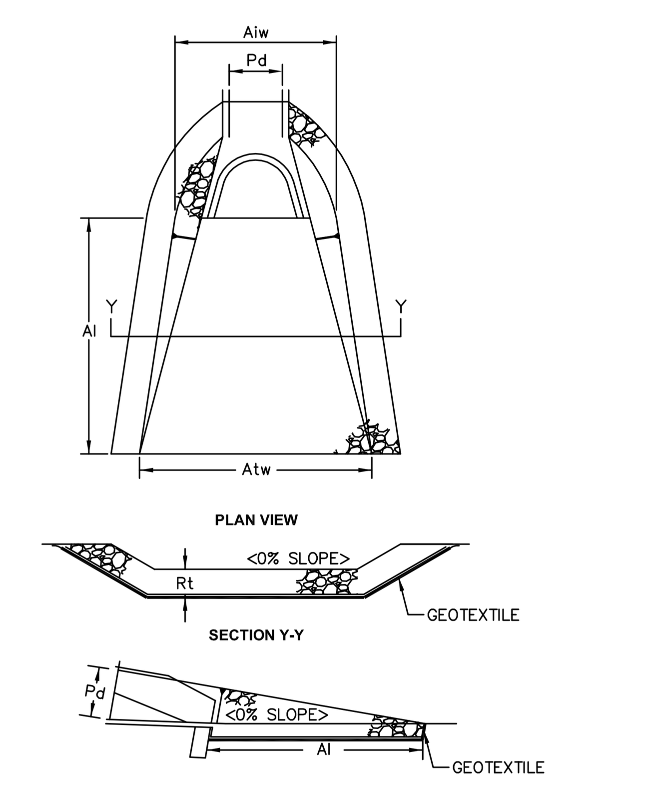

OUTLET NO.	PIPE DIA Pd (IN)	RIPRAP SIZE (R-_)	RIPRAP THICK. Rt (IN)	APRON LENGTH Al (FT)	APRON INITIAL WIDTH Aiw (FT)	APRON TERMINAL WIDTH Atw (FT)
FES-1	12	3	9	12.0	3.0	7.8

STANDARD CONSTRUCTION DETAIL #20
Reinforced Filter Fabric Fence (30" High)

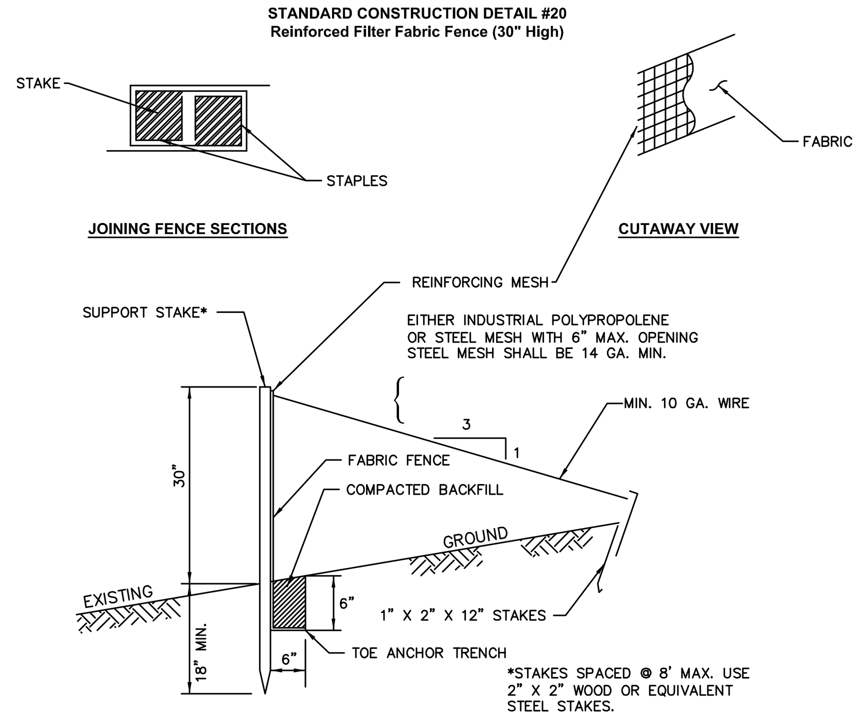

NOTE: SHOW ALL DETAILS AND CONSTRUCTION DIMENSIONS ON PLAN DRAWINGS.

Filter Fabric Fence must be installed at existing level grade. Both ends of each fence section must be extended at least 8 feet upslope at 45 degrees to the main fence alignment.

Sediment must be removed where accumulations reach 1/2 the above ground height of the fence.

Any fence section which has been undermined or topped must be immediately replaced with a Rock Filter Outlet. See Standard Construction Detail #18.

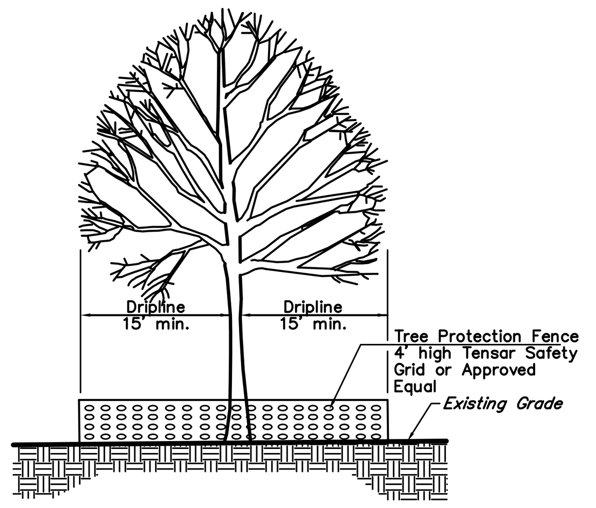

Note:
1.) Erect Tree Protection Fence at the Dripline of the Tree or at least Fifteen (15) Feet from the trunk of the tree.
2.) Attach Tree Protection Fence to wooden posts spaced eight (8) Feet on center.
3.) Any damage to the Tree Protection Fencing shall be replaced or repaired before further construction.

Standard Tree Protection Detail
No Scale

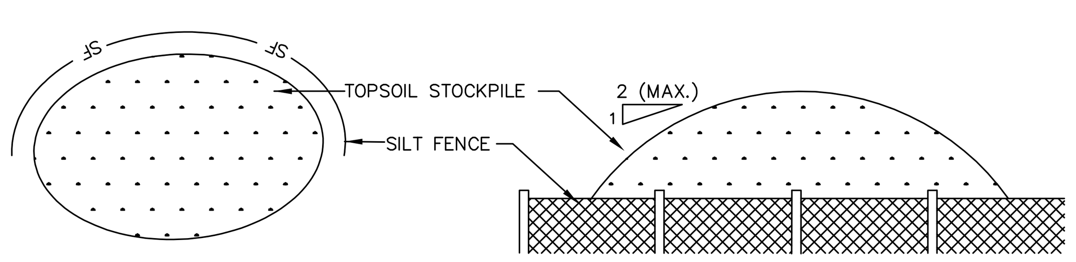

TOPSOIL STOCKPILE AREA DETAIL
NOT TO SCALE

FIGURE 15.3
Gabion Streambank Protection

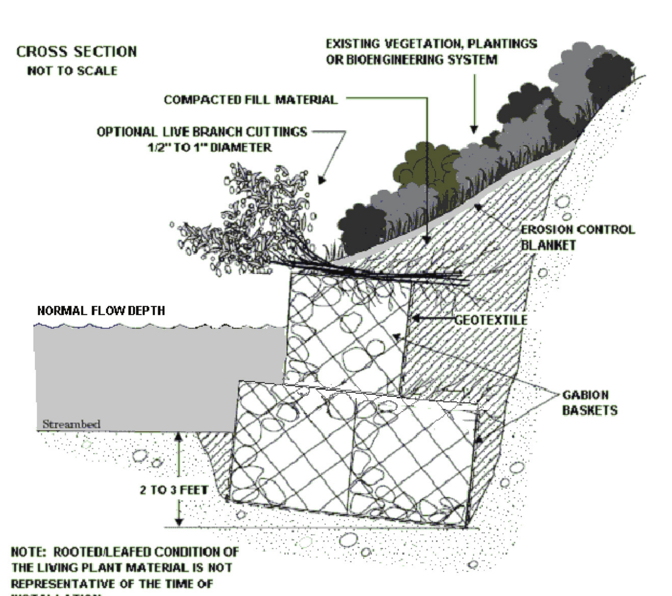

NOTE: ROOTED/LEAFED CONDITION OF THE LIVING PLANT MATERIAL IS NOT REPRESENTATIVE OF THE TIME OF INSTALLATION.

Adapted from USDA, NRCS, *Engineering Field Handbook*, Chapter 16

GABION STREAMBANK SLOPE PROTECTION DETAIL
NOT TO SCALE

FIGURE 15.4
Reno Mattress Streambank Protection

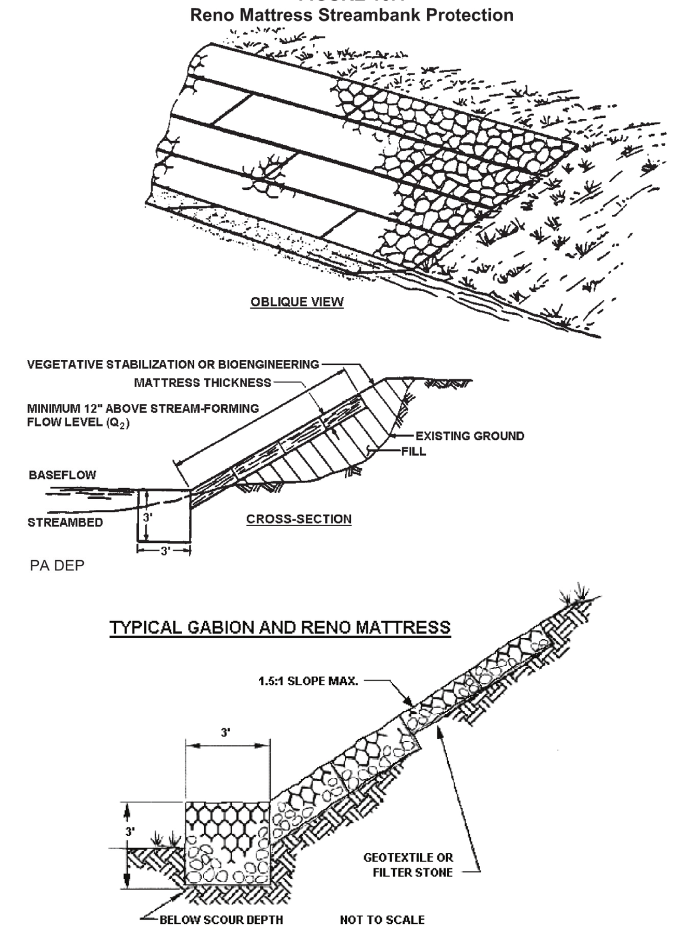

Adapted from Portland, Oregon *Erosion Control Manual*

NOTE: Gabion and Reno mattress streambank protection may not be grouted.

STREAMBANK SLOPE PROTECTION DETAIL
NOT TO SCALE

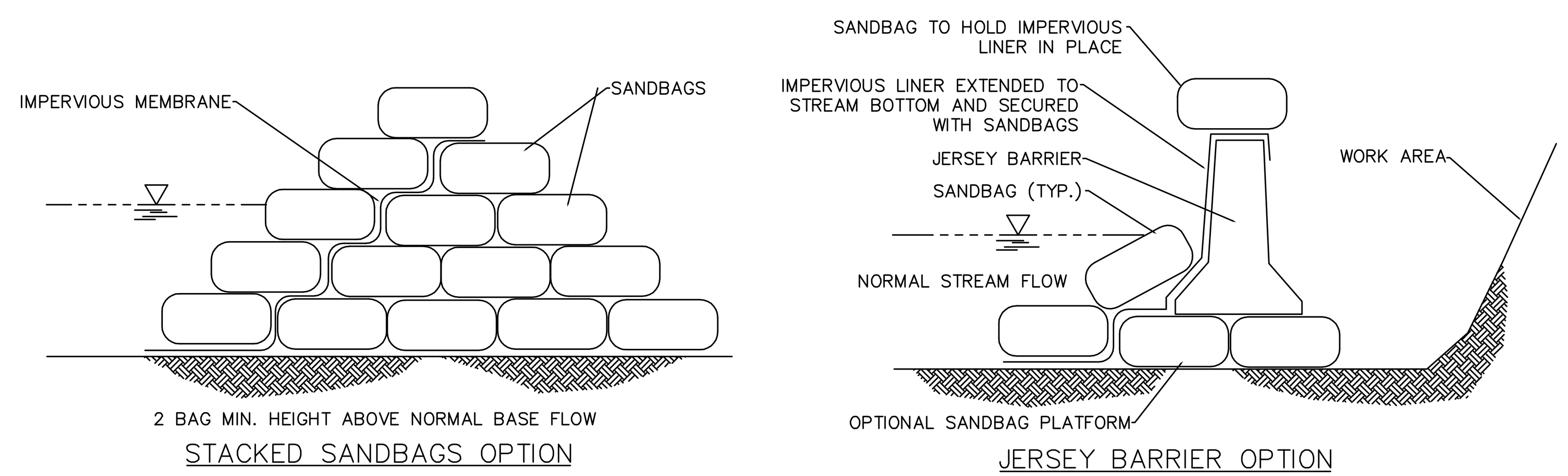

STANDARD CONSTRUCTION DETAIL #3-15
SANDBAG DIVERSION DAM OR COFFERDAM
NOT TO SCALE

FIGURE 3.11
Temporary Cofferdam and Pump Bypass Around In-channel Work Areas

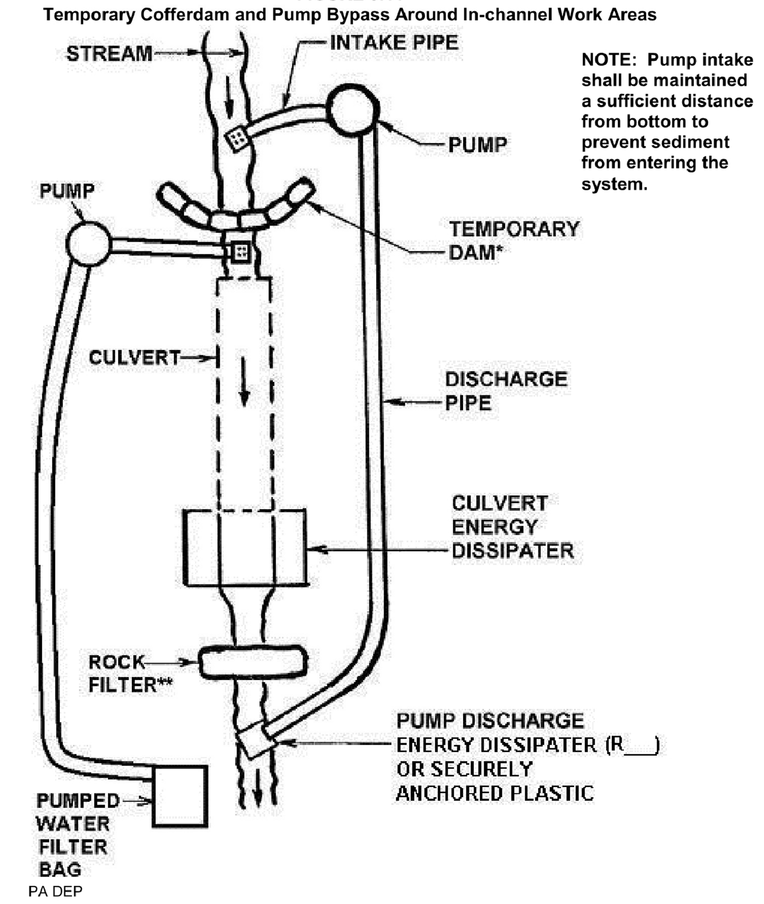

PA DEP

* Sandbags (Standard Construction Detail #3-15), Jersey barriers (Figure 3.13) or other non-erosive material, no earth fill. Do not excavate a sump for the pump intake.

** See Standard Construction Detail # 4-14. For low gradient channels, the rock filter may be replaced by an impervious cofferdam to prevent backflow into the work area.

TEMPORARY COFFERDAM AND PUMP BYPASS AROUND IN-CHANNEL WORK AREAS DETAIL
NOT TO SCALE

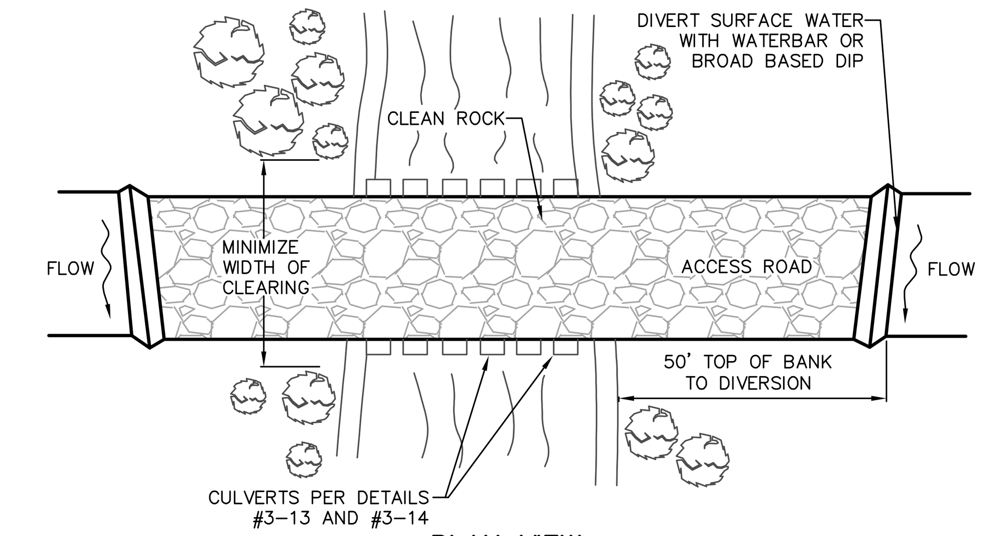

PLAN VIEW

NOTES:

WATERBARS AND BROAD-BASED DIPS SHALL DISCHARGE TO SEDIMENT REMOVAL FACILITY.

CLEAN ROCK SHALL CONFORM TO CHAPTER 105 PERMITTING REQUIREMENTS.

FOLLOW PERMIT CONDITIONS REGARDING REMOVAL OF CROSSING.

STANDARD CONSTRUCTION DETAIL #3-12
TEMPORARY STREAM CROSSING - PLAN VIEW
NOT TO SCALE

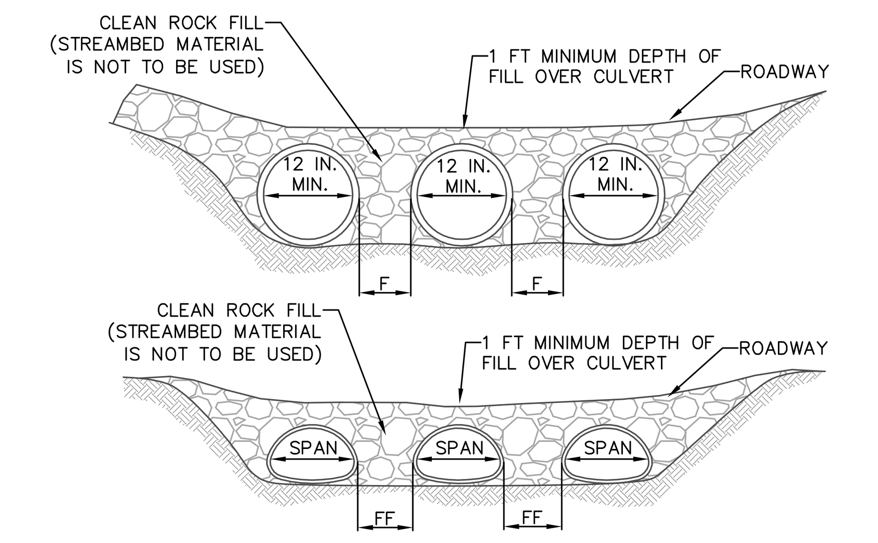

CROSS-SECTIONS

NOTES:

MULTIPLE PIPES AND MULTIPLE SPAN BRIDGES AND CULVERTS WHICH MAY TEND TO COLLECT DEBRIS, CONTRIBUTE TO THE FORMATION OF ICE JAMS AND INCREASE HEAD LOSSES SHALL BE AVOIDED TO THE MAXIMUM EXTENT PRACTICABLE. CROSSINGS OF LESS THAN 15 FEET SHALL BE BY ONE SPAN, EXCEPT WHERE CONDITIONS MAKE IT IMPRACTICAL TO AFFECT THE CROSSING WITHOUT MULTIPLE SPANS (SECTION 105.162).

SEE TABLE 3.5 OF THE PA DEP EROSION CONTROL MANUAL FOR DISTANCE VALUES 'F' AND 'FF'. FOR ARCH PIPES, USE CLOSEST AVAILABLE STANDARD SIZES THAT PROVIDE THE SAME WATERWAY OPENING AREA SHOULD SIZES WITHIN THE TABLE BE UNAVAILABLE.

PROVIDE 50' STABILIZED ACCESS TO CROSSING ON BOTH SIDES OF STREAM CHANNEL (SEE STANDARD CONSTRUCTION DETAIL #3-12).

PIPES SHALL EXTEND BEYOND THE TOE OF THE ROADWAY.

RUNOFF FROM THE ROADWAY SHALL BE DIVERTED OFF THE ROADWAY AND INTO A SEDIMENT REMOVAL BMP BEFORE IT REACHES THE ROCK APPROACH TO THE CROSSING.

MAINTENANCE

1. TEMPORARY STREAM CROSSINGS SHALL BE INSPECTED ON A DAILY BASIS.
2. DAMAGED CROSSINGS SHALL BE REPAIRED WITHIN 24 HOURS OF THE INSPECTION AND BEFORE ANY SUBSEQUENT USE.
3. SEDIMENT DEPOSITS ON THE CROSSING OR ITS APPROACHES SHALL BE REMOVED WITHIN 24 HOURS OF THE INSPECTION.

AS SOON AS THE TEMPORARY CROSSING IS NO LONGER NEEDED, IT SHALL BE REMOVED. ALL MATERIALS SHALL BE DISPOSED OF PROPERLY AND DISTURBED AREAS STABILIZED.

STANDARD CONSTRUCTION DETAIL #3-14
TEMPORARY STREAM CROSSING - MULTIPLE PIPES
NOT TO SCALE

SERIAL NO. 2016-2450730
CALL BEFORE YOU DIG!
PENNSYLVANIA LAW REQUIRES 3 WORKING DAYS NOTICE FOR CONSTRUCTION PHASE AND 10 WORKING DAYS IN DESIGN STAGE-STOP CALL
PENNSYLVANIA ONE CALL SYSTEM, INC.
1-800-242-1776

INFORMATION SHOWN ON THIS PLAN IS THE RESULT OF A PROFESSIONAL SERVICE RENDERED BY AND IS OWNED BY DUMACK ENGINEERING. REPRODUCTION OF THIS PLAN WITHOUT APPROVAL OF DUMACK ENGINEERING IS NOT PERMITTED. THE REPRODUCTION OF A COPY OF THIS PLAN FOR THE PURPOSE OF CREATING ADDITIONAL COPIES OR REVISING SAID PLAN SHALL, IN NO CIRCUMSTANCE, BE APPROVED. VIOLATION OF THIS RESTRICTION SHALL BE CONSIDERED A VIOLATION OF BOTH THE PROFESSIONAL CODE OF ETHICS AND A THEFT OF CORPORATE ASSETS, BOTH OF WHICH SHALL BE PROSECUTED TO THE FULLEST EXTENT OF CURRENT STATUTES.
THIS PLAN HAS BEEN SPECIFICALLY PREPARED FOR THE OWNER DESIGNATED HEREON, ANY MODIFICATION, REVISION, DUPLICATION OR USE WITHOUT THE WRITTEN CONSENT OF DUMACK ENGINEERING IS PROHIBITED. RELIANCE ON THIS PLAN FOR ANY PURPOSE OTHER THAN THAT WHICH IT IS INTENDED SHALL BE AT THE SOLE DISCRETION AND LIABILITY OF THE APPLICABLE PARTY.

THIS PROJECT HAS BEEN PREPARED FOR MUNICIPAL PURPOSES. ADDITIONAL INFORMATION MAY BE REQUIRED FOR CONSTRUCTION.

ALL DIMENSIONS MUST BE VERIFIED BY CONTRACTOR AND OWNER MUST BE NOTIFIED OF ANY DISCREPANCIES BEFORE PROCEEDING WITH THE WORK.

© - 2013, DUMACK ENGINEERING - ALL RIGHTS RESERVED

NOT VALID WITHOUT AN EMBOSSED SEAL OR SIGNATURE IN RED INK.

COMMONWEALTH OF PENNSYLVANIA — REGISTERED PROFESSIONAL — HEATH ALAN DUMACK — ENGINEER PE-051685-E

HEATH A. DUMACK, P.E. & P.L.S.
PA P.E. LICENSE No. PE-051685-E
PA P.L.S. LICENSE No. SU-054500-E

DUMACK ENGINEERING
A PROFESSIONAL CORPORATION
ESTABLISHED IN 1964
CIVIL - STRUCTURAL ENGINEERS & SURVEYORS

PENNS PARK OFFICE
677 DURHAM ROAD
P.O. BOX 487
PENNS PARK, PA 18943
PHONE: (215) 598-1230
FAX: (215) 598-1232

ROYERSFORD OFFICE
P.O. BOX 809
ROYERSFORD, PA 19468
PHONE:(610) 489-9449
FAX: (610) 489-9449

www.Dumack.com

REV No.	DATE	REVISION
1		
2		
3		
4		
5		
6		
7		
8		
9		
10		
11		
12		
13		
14		
15		
16		
17		
18		
19		
20		

PRELIMINARY AS FINAL
NOT FOR RECORDING

EXISTING PARCEL INFO:
T.M.P. No. 02-036-008
DEED BOOK: 2587 PAGE No. 1053
CURRENT ZONING: R-A-1

OWNER of RECORD:
SAMARPAN HINDU TEMPLE
2746 MECHANICSVILLE ROAD
BENSALEM, PA 19020

APPLICANT:
SAME AS ABOVE

0
GRAPHIC SCALE

EROSION & CONTROL DETAILS
2746 MECHANICSVILLE ROAD

BENSALEM TOWNSHIP
BUCKS COUNTY, PA

DRAWN BY: A.E.Y.	CHECKED BY: H.A.D.
SCALE: N.T.S.	PROJECT No: 5447
PLAN DATE: OCT. 5, 2016	SHEET No. 9 of 17

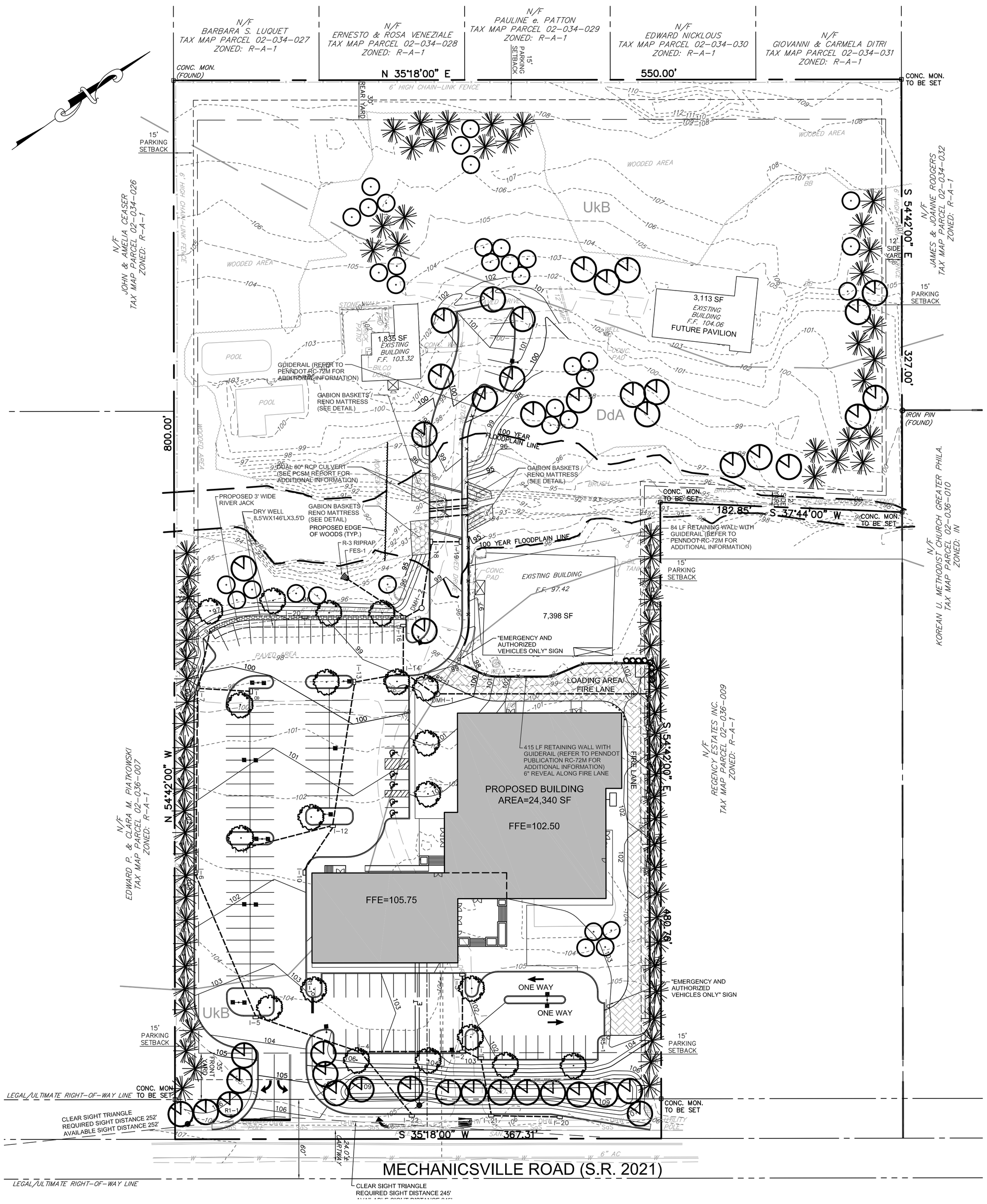

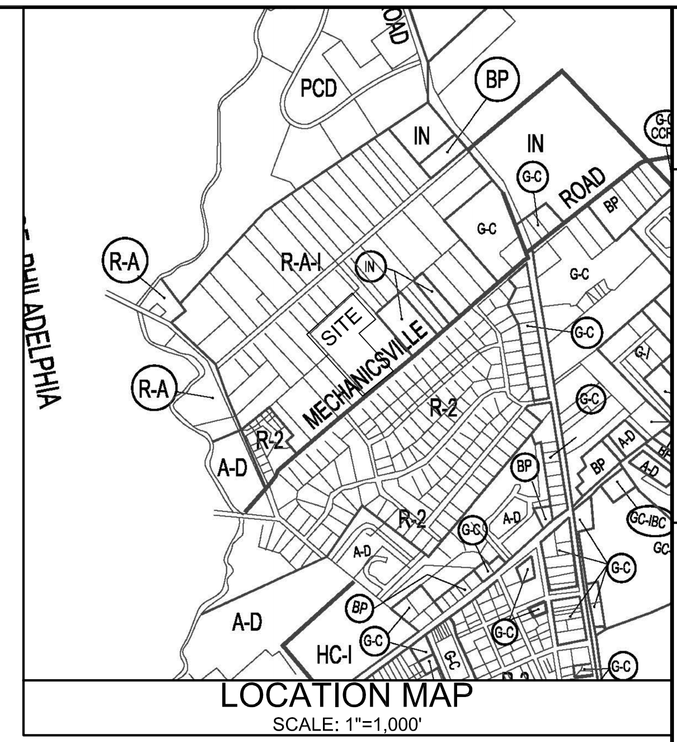

SERIAL NO. 2016-2450730

CALL BEFORE YOU DIG!
PENNSYLVANIA LAW REQUIRES 3 WORKING DAYS NOTICE FOR CONSTRUCTION PHASE AND 10 WORKING DAYS IN DESIGN STAGE-STOP CALL
PENNSYLVANIA ONE CALL SYSTEM, INC.
1-800-242-1776

INFORMATION SHOWN ON THIS PLAN IS THE RESULT OF A PROFESSIONAL SERVICE RENDERED BY AND IS OWNED BY DUMACK ENGINEERING. ANY REUSE WITHOUT THE WRITTEN APPROVAL OF DUMACK ENGINEERING IS NOT PERMITTED. DISTRIBUTION OF ELECTRONIC FILES SHALL NOT CONSTITUTE THE SALE OF CREATING ADDITIONAL COPIES OR REVISING SAID PLAN FOR ANY PURPOSE OTHER THAN THAT WHICH IT IS INTENDED SHALL BE PROHIBITED. ANY REUSE OR DISTRIBUTION IN VIOLATION OF THIS RESTRICTION SHALL BE CONSIDERED A VIOLATION OF BOTH COPYRIGHT AND CONTRACT LAWS AND SHALL BE PROSECUTED TO THE FULLEST EXTENT OF THE LAW.
CORPORATE ASSETS, BOTH OF WHICH SHALL BE PROSECUTED TO THE FULLEST EXTENT OF THE LAW.
THIS PLAN HAS BEEN SPECIFICALLY PREPARED FOR THE OWNER LISTED HEREON AND ANY USE OR REUSE BY ANY OTHER PERSON OR USE WITHOUT THE WRITTEN CONSENT OF DUMACK ENGINEERING SHALL BE AT THE SOLE RISK OF SAID PERSON. FOR ANY PURPOSE OTHER THAN THAT WHICH IT IS INTENDED SHALL BE AT THE SOLE DISCRETION AND LIABILITY OF THE APPLICABLE PARTY.
THIS PROJECT HAS BEEN PREPARED FOR MUNICIPAL PURPOSES. ADDITIONAL INFORMATION MAY BE REQUIRED FOR CONSTRUCTION.
OWNER MUST BE NOTIFIED OF ANY DISCREPANCIES BEFORE PROCEEDING WITH THE WORK.
© - 2013, DUMACK ENGINEERING - ALL RIGHTS RESERVED

NOT VALID WITHOUT AN EMBOSSED SEAL, OR SIGNATURE IN RED INK.

HEATH ALAN DUMACK
REGISTERED PROFESSIONAL ENGINEER
COMMONWEALTH OF PENNSYLVANIA

HEATH A. DUMACK, P.E. & P.L.S.
PRESIDENT, DUMACK ENGINEERING
PA P.E. LICENSE No. PE-064500-E
PA P.L.S. LICENSE No. SU-054500-E

DUMACK ENGINEERING
ESTABLISHED IN 1964
A PROFESSIONAL CORPORATION
CIVIL - STRUCTURAL ENGINEERS & SURVEYORS
PENNS PARK OFFICE
677 DURHAM ROAD
P.O. BOX 487
PENNS PARK, PA 18943
PHONE: (215) 598-1230
FAX: (215) 598-1222
ROYERSFORD OFFICE
P.O. BOX 809
ROYERSFORD, PA 19468
TELEPHONE: (610) 489-4949
FAX: (610) 489-9449
www.Dumack.com

REV. No.	DATE	REVISION
1		
2		
3		
4		
5		
6		
7		
8		
9		
10		
11		
12		
13		
14		
15		
16		
17		
18		
19		
20		

PRELIMINARY AS FINAL
NOT FOR RECORDING

EXISTING PARCEL INFO:
T.M.P. No. 02-036-008
DEED BOOK: 2587 PAGE No. 1053
CURRENT ZONING: R-A-1

OWNER of RECORD:
SAMARPAN HINDU TEMPLE
2746 MECHANICSVILLE ROAD
BENSALEM, PA 19020

APPLICANT:
SAME AS ABOVE

40 0 20 40
GRAPHIC SCALE

LANDSCAPE PLAN
2746 MECHANICSVILLE ROAD
BENSALEM TOWNSHIP
BUCKS COUNTY, PA

DRAWN BY: A.E.Y.
CHECKED BY: H.A.D.
SCALE: 1"=40'
PROJECT No: 5447
PLAN DATE: OCT. 5, 2016
SHEET No: 10 OF 17

General Notes:

1. Refer to plan entitled "Landscape Details" for all landscape notes and details.
2. No existing or proposed structures or plantings, highest point of which is 2 feet above the centerline of the roadway, shall be permitted within the clear sight triangles.
3. After tree protection fencing has been installed, it shall be inspected and approved by the Township Engineer.

Legend

- Tract Boundary Line
- Legal Right-of-Way
- Existing Sanitary Sewer — SaS —
- Existing Water Main — W —
- Existing Storm Sewer
- Existing Gas Main — G —
- Existing Electric — E —
- Existing Telephone — T —
- Existing Treeline
- Proposed Centerline of Road
- Proposed Building Setback Line
- Proposed Water Service
- Proposed Sanitary Sewer Lateral
- Proposed Curb
- Existing Utility Pole
- Existing Valve

Tree Calculation

Section 201-106(c)(2) STREET TREES SHALL BE PLANTED AT INTERVALS NO MORE THAN 20 FEET.	367.3 /20 = 18.4 TREES 19 TREES REQUIRED
Section 201-106(c)(10)b TEN (10) TREES PER ACRE OF GROSS SITE AREA PLUS ONE (1) TREE FOR EVERY FIVE (5) PARKING SPACES.	7.85 AC *10 = 78.5 TREES + (131/5)=26.2 TREES = 105 TREES REQUIRED
	124 TREES REQUIRED 176 TREES PROVIDED

SITE PLANTING SCHEDULE

SYMBOL	QUANTITY	BOTANICAL NAME	COMMON NAME	SIZE	ROOT	REMARKS
	35	CORNUS ALTERNIFOLIA	PAGODA DOGWOOD	10'-12' HT.	B&B	FULL PLANTS
	43	QUERCUS PHELLOS	WILLOW OAK	2 1/2" - 3" CAL.	B&B	FULL PLANTS
	20	ZELKOVA SERRATA	JAPANESE ZELKOVA	2 1/2" - 3" CAL.	B&B	MATCHED PLANTS
	78	THUJA OCCIDENTALIS	NORTHERN WHITE CEDAR (ARBORVITAE)	5 GAL.	CONT.	FULL PLANTS
	8	EUONYMUS BUNGAENUS	WINTERBERRY	5 GAL.	CONT.	FULL PLANTS

Landscape Materials, Planting - Seeding - Sodding Specifications

PART 1 - GENERAL

1. DESCRIPTION OF WORK

A. Furnish, deliver and plant new plant material to the extent shown on drawings and in the plant list schedules. The term "plant material" shall mean trees, shrubs, ground cover, other growing plants, grass seeding, and sod.

B. Maintain and guarantee survival of new plant material for 18 Months from the date all of the work is accepted.

C. Provide care and treatment of existing plant material.

D. Previous Work

(1) Examine all substrates and other related areas to which the work of this section is to be incorporated. Do not proceed if any conditions will prevent the proper execution of this work.

(2) Execution of the work of this section shall constitute acceptance of all existing and previously executed work and other conditions as being satisfactory in every respect.

(3) Contractor shall protect all existing work from damage.

2. QUALITY CONTROL

A. All planting materials shall conform to the latest edition of the American Standard for Nursery Stock as published by the American Nursery and Landscape Association. All trees shall be balled and burlapped, nursery grown, not "collected stock".

B. All plants shall be nursery grown within a U.S.D.A. plant hardiness zone which is the same as, or colder than, the zone in which the project is located.

C. Do not make substitutions: If specified landscape material is not obtainable, submit proof of non-availability and proposal for use of equivalent materials.

D. Sizes: Provide trees and shrubs of sizes shown or specified. Trees and shrubs of larger size may be used if acceptable to the Owner.

E. Inspection: The Owner reserves the right to inspect trees and shrubs either at place of growth or at site before planting for compliance with requirements for name, variety, size and quality.

3. PRODUCTS

A. Topsoil: Shall be a natural, friable, fertile, fine sandy loam possessing the characteristics of representative topsoils in the vicinity. The topsoil shall be free from subsoil, noxious weeds, stones larger than 2" in diameter, lime, cement, ashes, slag or other deleterious matter.

B. Fertilizer: All fertilizer shall be granular packet or pellet with 35 - 80% of the total nitrogen in a slowly available form with a minimum analysis of 5-10-5.

C. Mulch: Material shall be well aged (2 years min.) finely shredded hardwood bark, dark brown in color, or approved equal. Material shall be mulching grade: uniform in size and free of foreign matter and weed seeds.

D. Lime: Natural limestone containing not less than 85% of total carbonates, ground so that not less than 90% passes a 10-mesh sieve and not less than 50% passes a 100-mesh sieve.

E. Peatmoss: Type 1 Sphagnum peatmoss; finely divided with a PH of 3.1 - 5.0.

F. Planting Mixture: A thorough mixture of 1 part peat humus, 1 part sand, and 1 part topsoil. Blend in Superphosphate as per manufacturer's recommendations.

G. Anti-desiccant - "Wilt-Pruf" NCF as manufactured by Nursery Specialty Products of New York or approved equivalent.

H. Pre-emergence weed killer - shall be Treflan, or approved equivalent.

4. SUBMITTALS

A. Certification: Submit certificates of inspection as required by governmental authorities, and manufacturer's or vendors certified analysis for soil amendments and fertilizer materials. Submit other data-substantiating that materials comply with specified requirements.

(1) Submit seed vendor's certified statement for each grass seed mixture required, stating botanical and common name, percentage by weight, and percentages of purity, germination, and weed seed for each grass seed species.

B. Planting Schedule: Submit planting schedule showing scheduled dates for each type of planting in each area of site.

C. Maintenance Instructions: Submit typewritten instructions recommending procedures to be established by Owner for maintenance of landscape work for one full year. Submit prior to expiration of the 18 month maintenance & guarantee period.

5. DELIVERY, STORAGE AND HANDLING

A. Packaged Materials: Deliver package materials in containers showing weight, analysis and name of manufacturer. Protect materials from deterioration during delivery and while stored at site.

B. Sod: Time delivery so that sod will be placed within 24 hours after stripping. Protect sod against drying and breaking of rolled strip.

C. Trees and Shrubs: provide freshly dug trees and shrubs. Do not prune prior to delivery. Do not bend or bind-tie trees in such a manner as to damage bark, break branches or destroy natural shape. Provide protective covering during delivery. Plant trees and shrubs upon delivery.

6. SITE CONDITIONS

A. Utilities: Determine location of underground utilities and perform work in a manner which will avoid any damage. Hand excavate, as required. Maintain grade stakes set by others until removal is mutually agreed upon by parties concerned.

B. Excavation: When conditions detrimental to plant growth are encountered, such as rubble fill, adverse drainage conditions, or obstructions, notify Owner before planting. Plant excavation pit must be not less than 12 inches wider or any deeper than necessary to accommodate the ball of a tree (6 inches wider for shrub pits).

C. Planting Time: Plant or install materials during normal planting seasons for each type of Landscape work required. Correlate planting with specified maintenance periods to provide maintenance from date of substantial completion. See Planting Procedures for planting seasons.

D. Coordination with Lawns: Plant trees and shrubs after final grades are established and prior to planting of lawns, unless otherwise acceptable to Owner. If planting of trees occurs after lawn work, protect lawn areas and promptly repair damage to lawns resulting from planting operations.

7. GUARANTEE

A. Guarantee lawns through 18 months maintenance and guarantee period and until final acceptance.

B. All plant material shall be guaranteed for a period of 18 Months from date of acceptance. Any plants found to be dead, dying, or diseased during that period shall be replaced at contractor's expense.

C. Replacement will be made according to these same specifications and during the normal planting period. Replacements shall be subject to the same guarantee and replacement as the original material. The replacements shall be made within 60 days following written correspondence from the owner or his representative.

D. In case of any questions regarding the conditions and satisfactory establishment of a rejected plant, the contractor may, if approved by the owner allow such a plant to remain through another growing season at which time the rejected plant, if found to be dead, or in an unhealthy or badly impaired condition, shall be replaced.

PART 2 - PLANTING PROCEDURES

A. The planting seasons shall be as follows:

Deciduous Materials	Evergreen Materials
March 21 - June 2	April 1 - June 1
Sept. 1 - Nov. 1	

B. All planting materials and planting operations are subject to the requirements of Local Municipal Ordinances.

C. No trees or shrubs may be planted on detention basin berms. Berms shall be maintained as grass lawn.

D. Fertilizer - granular fertilizer shall be incorporated into the soil mix at recommended rates. Pelleted or packed fertilizer to be placed as shown in details.

E. Trees and shrubs shall bear same relationship to finished grade as they did in the nursery row.

F. Before placing shrubs in pits, scarify a 3" layer of existing soil at the bottom of pit and tamp lightly.

G. All trees shall be placed directly on the scarified subgrade.

H. The plant pit shall be filled with planting mixture as specified and placed in 6" layers around the ball.

I. Each layer shall be carefully tamped in place in a manner to avoid injury to the roots or ball or disturbing the position of the plant. When approximately two-thirds (2/3) of the plant has been backfilled, the pit shall be filled with water and the soil allowed to settle around the roots. B & B plants shall have all the twine, wire baskets and burlap cut away or folded back from the top 1/3 of the ball and trunks before applying the water. After the water has been absorbed, the plant hole shall be filled with soil mix and tamped lightly to grade.

J. All containerized stock shall be removed from containers and the root mass should either be physically loosened or sliced to prevent strangulation.

K. Failure to comply with planting procedures outlined above is basis for rejection of plant material by owner.

L. Backfill - Material shall be a friable agricultural loam suitable for growing plant material free from sticks, stones and other foreign material.

M. Landscape contractor is responsible for watering sufficiently at time of planting and until job is completed and turned over to owner.

N. Plant material locations are approximate, when necessary, adjustments may be made in the field and approved by the owner prior to installation.

O. At intersections, trees shall be located no closer than thirty (30) feet from the intersection of the street right-of-way lines except when governing standards increase the distance for clear sight.

P. Tree planting shall not take place within 10 feet of any utility line, underground or overhead.

Q. Planting Ground Cover

Space plants as shown in plan or on plant schedule. Dig holes large enough to allow for spreading of roots and backfill with planting mixture. Work soil around roots to eliminate air pockets and leave a slight saucer indentation around plants to hold water. Water thoroughly after planting taking care not to cover crowns of plants with wet soil. Mulch areas between ground cover plants; place not less than 2" deep.

R. PRUNING

1. Trees shall be pruned to balance top growth with roots and to preserve their natural character and shape. pruning shall be restricted in general to the secondary branches and soft/sucker growth. never cut a leader.

2. All plants disfigured by poor pruning practices will be rejected by the Owner.

3. All pruning cuts shall remain unpainted.

S. MULCHING

Before mulch is installed, apply pre-emergence weed killer and incorporate into soil according to manufacturer's directions. All surfaces which are to receive mulch shall be raked off and smooth and free of all rocks and debris or large pieces of bark prior to application of mulch. Spread mulch evenly to minimum thickness of 3 inches over entire area of filled excavation.

T. TREE STABILIZATION

1. All trees to be stabilized within 48 hours of planting.

2. 'Tree Staple' or approved equal to be used for tree stabilization-see planting details.

U. REMOVAL OF ALL PLANTING DEBRIS

Removal of debris is required. The property must be left in a neat and orderly condition in accordance with good and accepted planting practices.

V. MAINTENANCE

1. Begin maintenance immediately after planting.

2. Maintain trees, shrubs and other plants until final acceptance by owner.

3. Maintain trees, shrubs and other plants by pruning, cultivating and weeding as required for healthy growth. Restore planting saucers. Re-set trees to proper grades or vertical position as required. Spray as required to keep trees and shrubs free of insects and disease. Water as needed.

4. Maintain lawns by watering, fertilizing, weeding, mowing, trimming, and other operations such as rolling, regrading and replanting as required to establish a smooth, acceptable lawn, free of eroded or bare areas.

5. Maintain gravel beds free of weeds.

W. CLEANUP AND PROTECTION

1. During landscape work, keep pavements clean and work area in an orderly condition.

2. Protect landscape work and materials from damage due to landscape operations, operations by other contractors and trades and trespassers. Maintain protection during installation and maintenance periods. Treat, repair or replace damaged landscape work as directed.

X. INSPECTION AND ACCEPTANCE

1. When landscape work is completed, including maintenance, Owner will make an inspection to determine acceptability.

2. Where inspected landscape work does not comply with requirements, replace rejected work and continue specified maintenance until reinspected by Owner and found to be acceptable. Remove rejected plants and materials promptly from project site.

PART 3 - GUARANTEE AND MAINTENANCE

A. Trees, shrubs, groundcover plants and lawns shall be guaranteed and maintained for 18 months from final acceptance by Owner.

B. Maintenance crew with a trained foreman shall visit the site once weekly from spring (blooming of crocus) to fall (killing frost) and once monthly during the winter. A monthly worksheet shall be submitted to the Owner stating work performed during the month, or if none has been required, submit a notation to that effect.

C. Where it is necessary to replace plant material or to repair the lawn the Owner shall inform the Contractor thereof before such replacement is made.

D. Maintenance shall include, as determined by Owner, mowing, watering, cultivating, weeding, mulching, control of insects and diseases, pruning, and other horticultural operations for proper growth and appearance of plant materials and beds, and fertilizing.

E. The Contractor shall guarantee that plants shall be in a vigorous and thriving condition during and at the end of the guarantee period. Should any plants appear to be in poor health or lack normal growth habit, they shall be removed at once and replaced in a manner and time as herein before specified.

F. During the Maintenance and Guarantee period, damage to planting not caused by the Contractor shall be excluded from the Guarantee. Such damage shall include damage by vehicles, theft, fire, or acts of vandalism.

G. Where evidence of such damage excluded from guarantee exists, advise the Owner in writing describing the damage. The Owner, upon receipt of such notice, may order the Contractor to correct the damage at the Owner's expense, or exclude the damaged work from the Guarantee provisions and correct the damage by an arrangement deemed by the Owner to be in his best interest.

PART 4. FINAL INSPECTION FOR ACCEPTANCE

A. The Contractor shall notify the Owner upon completion of guarantee and maintenance and request final inspection prior to acceptance of work.

B. Should any portion of the work be unacceptable, the Contractor shall make all work acceptable and request a reinspection by the Owner.

C. The Contractor will be notified by letter of acceptance within five days after inspection or five days after reinspection should the latter be necessary.

D. Upon notice of final acceptance, the Owner will assume maintenance.

PART 5. SEEDING/SODDING SPECIFICATIONS

1. TOPSOIL

A. Topsoil shall be stripped and stockpiled in areas on-site as directed by the Owner. Topsoil from wetland areas shall be separately stockpiled and retained for re-use, as needed, in wetland mitigation areas.

B. The surface of all earth areas shall be finished to a reasonable smooth compact surface. The surface of areas to be topsoiled shall be finished to a level of six (6) inches below finished grade as shown on the drawings and left with a smoothness suitable for application of topsoil.

C. The subgrade shall be thoroughly loosened to a depth of at least three inches before topsoil is spread. Topsoil previously stockpiled shall be spread over the entire work area to a depth of at least six (6) inches after compaction to a smooth firm seedbed prior to seeding. Additional topsoil shall be provided where adjustments are necessary to attain final true even grades shown on the drawings. Topsoil may be spread during any season, except that no topsoil shall be spread in a frozen or muddy condition. The contractor shall be responsible to restore any damage or loss to the grade surface caused by erosion before planting takes place.

2. FERTILIZATION

A. For permanent seeding: limestone shall be applied according to soils tests, or worked in deeply at a rate of 2,000 lbs. per acre together with a commercial fertilizer of 10-20-20 (N-P-K) or equivalent dry formulation applied at a rate of 1,000 lbs. per acre. At the time of permanent seeding, work into the surface 1,000 lbs. of 18-24-6 (N-P-K) or equivalent per acre. The fertilizer shall be complete and delivered to the site in the original unopened container which shall bear the manufacturer's guaranteed statement of analysis.

B. Initial limestone and fertilizer applications are to be blended into the top 2" of topsoil by raking, discing, harrowing or by other acceptable methods. the second fertilizer may be applied together with seeding operations. For temporary seeding, limestone shall be supplied at a rate of 2,000 lbs. per acre together with a commercial fertilizer of 10-20-20 (N-P-K) or equivalent dry formulation supplied at a rate of 1,000 lbs. per acre.

3. SEEDING

A. Grass seed shall have a minimum purity of 85%, minimum germination (PLS) of 80% and weed content not exceeding a maximum of 1/2%.

The seed mixture for fine lawn areas (Seed Mix Type 'A') shall be: Kentucky Bluegrass, creeping red fescue and perennial ryegrass with percent of weight being 40%, 40% and 20% respectively and sown at a rate of 4 lbs./1000 S.F. (175 lbs./acre). Seeding shall occur between the dates of April 1 and June 15 or August 25 and October 1 (November 1 for temporary seeding).

Temporary seeding shall consist of Annual Ryegrass applied at 40 lbs. per acre with a minimum purity of 85% and germination (PLS) of 80%. Seeding shall occur between April 1 and November 1.

B. Seed for all Basin side slopes (Seed Mix Type 'B') shall be Ernst Seed Mix No.: ERNMX-128 (Seasonally Flooded Area Annual & Perennial Wildlife Food Mix) as supplied by: Ernst Conservation Seeds, Meadville, PA (Phone: 800-873-3321)

C. Seed for all retention basin bottoms (Seed Mix Type 'C') shall be Ernst Seed Mix No.: ERNMX-126 (Retention Basin Floor Seeding-Low Maintenance Grass -like Species) as supplied by: Ernst Conservation Seeds, Meadville, PA (Phone: 800-873-3321)

D. Seed shall be spread uniformly, according to the Manufacturer's specified rates and application methods.

4. SODDING

A. Sod: Provide strongly rooted sod, not less than 2 years old and free or weeds and undesirable native grasses. Provide only sod capable of growth and development when planted (viable, not dormant). Provide sod composed principally of the following: Kentucky Bluegrass, Merion Bluegrass.

B. Lay sod within 24 hours from time of stripping. Do not plant dormant sod or if ground is frozen.

C. Lightly mist finished topsoil grade with water prior to laying sod. Lay sod to form a solid mass with tightly fitted joints. Butt ends and sides of sod strips- do not overlap. Stagger strips to offset joints in adjacent courses. Work from boards to avoid damage to subgrade or sod. Tamp or roll lightly to ensure contact with subgrade. Work sifted soil into minor cracks between pieces of sod; remove excess to avoid smothering of adjacent grass.

D. Anchor sod on slopes with wood pegs to prevent slippage.

E. Water sod thoroughly with a fine spray immediately after planting.

PART 6. SEED MIX BREAKDOWN:

1. SEED MIX 'A'

FINE LAWN PERMANENT SEED MIX:

POA PRATENSIS	KENTUCKY BLUEGRASS
FESTUCA RUBRA	CREEPING RED FESCUE
LOLIUM PERENNE	PERENNIAL RYE GRASS

Seed rate: 4 pounds per 1,000 s.f. (175 lbs. per acre)

2. SEED MIX 'B'

RAIN GARDEN MIX: ERNMX-180, rev 2011

SCHIZACHYRIUM SCOPARIUM 'CAMPER'	'CAMPER' LITTLE BLUESTEM
CHASMANTHIUM LATIFOLIUM, PA ECOTYPE	RIVER OATS, PA ECOTYPE
ELYMUS RIPARIUS, PA ECOTYPE	RIVERBANK WILD RYE, PA ECOTYPE
CAREX SQUARROSA, VA ECOTYPE	SQUARROSE SEDGE, VA ECOTYPE
CAREX VULPINOIDEA, PA ECOTYPE	FOX SEDGE, PA ECOTYPE
ECHINACEA PURPUREA	PURPLE CONEFLOWER
LIATRIS SPICATA, PA ECOTYPE	MARSH BLAZING STAR
RUDBECKIA HIRTA	BLACK EYED SUSAN
PENSTEMON DIGITALIS, PA ECOTYPE	TALL WHITE BEARD TONGUE
SENNA HEBECARPA	WILD SENNA
ZIZIA AUREA	GOLDEN ALEXANDERS
ANDROPOGON GERARDII 'NIAGARA'	'NIAGARA' BIG BLUESTEM
ASCLEPIAS INCARNATA	SWAMP MILKWEED
ASTER PRENANTHOIDES	ZIGZAG ASTER
BAPTISIA AUSTRALIS	BLUE FALSE INDIGO
COREOPSIS LANCEOLATA	LANCE-LEAVED COREOPSIS
MONARDO MEDIA	PURPLE BERGAMOT
TRADESCANTIA OHIENSIS	OHIO SPIDERWORT
VERBENA HASTATA	BLUE VERVAIN
AGROSTIS PERENNANS	AUTUMN BENTGRASS

Seed At: 1/2 pounds per 1000 SF (22 pounds per acre)
(Last revised February 2011)

PART 7. STORM WATER MANAGEMENT BASIN MAINTENANCE

1. CONSERVATION SEED MIX AREAS

A. Rain Garden: Mow ONLY during the dormant season. NEVER CUT DOWN LOWER THAN 6" TO 8" HEIGHT.

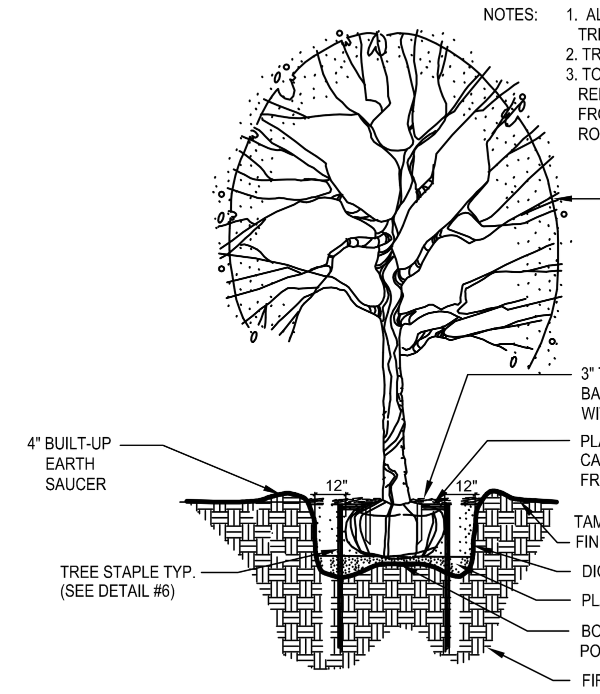

NOTES:
1. ALL TREE PITS SHALL PERCOLATE SUFFICIENTLY FOR PROPER TREE GROWTH. TEST EACH PIT PRIOR TO PLACING TREE IN PIT.
2. TREE PITS SHALL BE TWICE THE DIAMETER OF THE ROOTBALL.
3. TOP AND SIDES OF ALL WIRE BASKETS MUST BE COMPLETELY REMOVED FROM ROOT BALL PRIOR TO PLANTING AND REMOVED FROM SITE. DO NOT REMOVE BASKET FROM BOTTOM OF THE ROOT BALL.

1 TREE PLANTING DETAIL
NOT TO SCALE

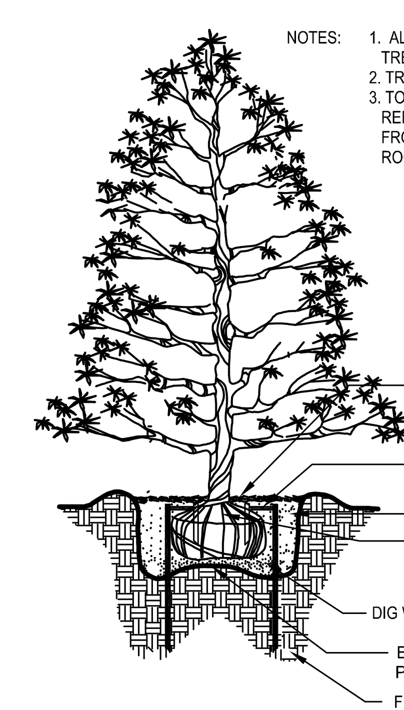

NOTES:
1. ALL TREE PITS SHALL PERCOLATE SUFFICIENTLY FOR PROPER TREE GROWTH. TEST EACH PIT PRIOR TO PLACING TREE IN PIT.
2. TREE PITS SHALL BE TWICE THE DIAMETER OF THE ROOTBALL.
3. TOP AND SIDES OF ALL WIRE BASKETS MUST BE COMPLETELY REMOVED FROM ROOT BALL PRIOR TO PLANTING AND REMOVED FROM SITE. DO NOT REMOVE BASKET FROM BOTTOM OF THE ROOT BALL.

2 EVERGREEN TREE PLANTING DETAIL
NOT TO SCALE

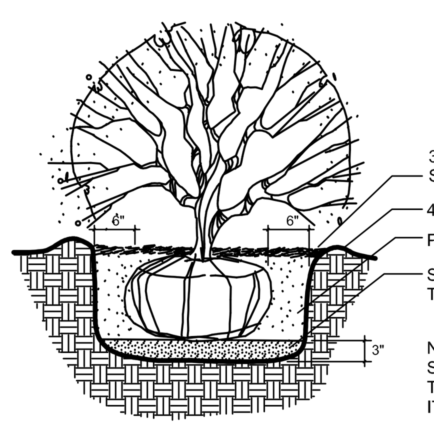

NOTE:
SHRUB SHALL BEAR SAME RELATION TO FINISH GRADE AS IT DID TO ITS NURSERY FIELD GROWN GRADE.

3 SHRUB PLANTING DETAIL
NOT TO SCALE

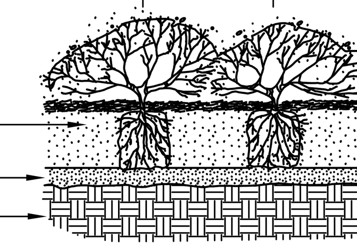

4 GROUNDCOVER PLANTING DETAIL
NOT TO SCALE

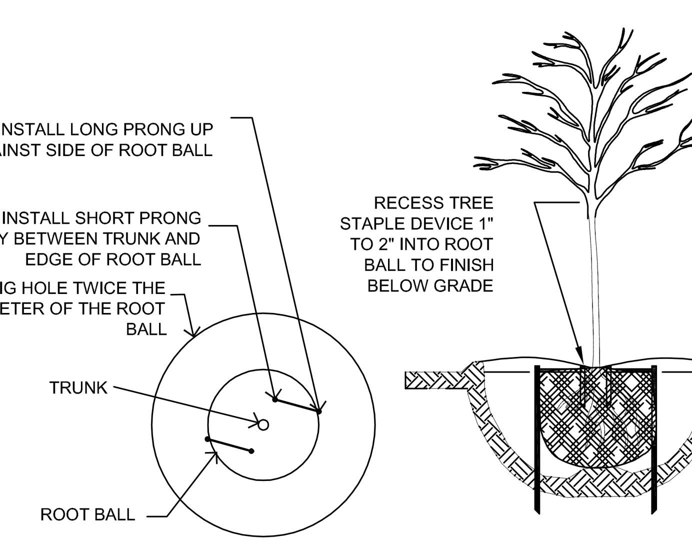

B & B TREE PLANTING DETAIL

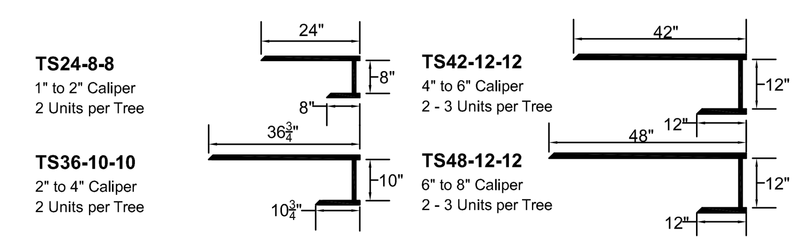

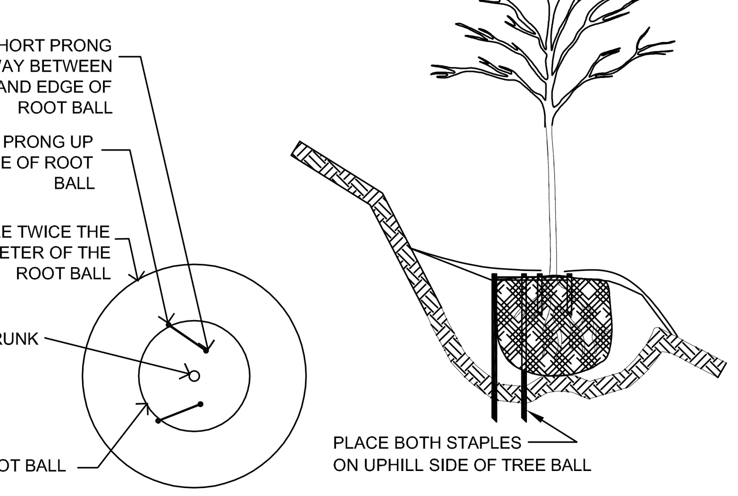

B & B TREE PLANTING DETAIL ON 2:1 SLOPE

6 TREE STAPLING DETAIL
NOT TO SCALE

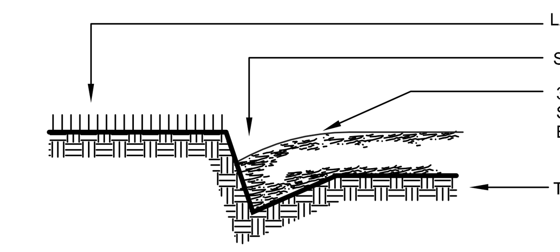

5 EDGING AT MULCH BED
NOT TO SCALE

NOTES:
1. ALL TREE PITS SHALL PERCOLATE SUFFICIENTLY FOR PROPER TREE GROWTH. TEST EACH PIT PRIOR TO PLACING TREE IN PIT.
2. TREE PITS SHALL BE 2' WIDER THAN ROOT BALL FOR TREES SMALLER OR EQUAL TO 5" CALIPER, AND 4' WIDER FOR TREES OVER 5" CALIPER.
3. TOP AND SIDES OF ALL WIRE BASKETS MUST BE COMPLETELY REMOVED FROM ROOT BALL PRIOR TO PLANTING AND REMOVED FROM SITE. DO NOT REMOVE BASKET FROM BOTTOM OF THE ROOT BALL.

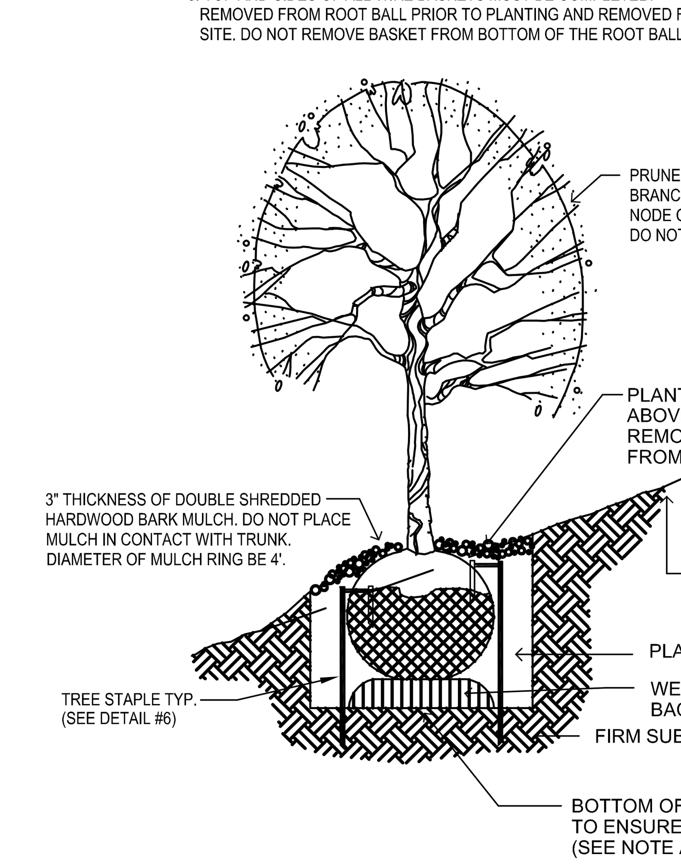

7 TREE PLANTING ON SLOPE
NOT TO SCALE

SERIAL NO. 2016-2450730
CALL BEFORE YOU DIG!
PENNSYLVANIA LAW REQUIRES 3 WORKING DAYS NOTICE FOR CONSTRUCTION PHASE AND 10 WORKING DAYS IN DESIGN STAGE-STOP CALL
PENNSYLVANIA ONE CALL SYSTEM, INC.
1-800-242-1776

INFORMATION SHOWN ON THIS PLAN IS THE RESULT OF A PROFESSIONAL SERVICE RENDERED BY AND IS OWNED BY DUMACK ENGINEERING. REPRODUCTION OF THIS PLAN WITHOUT APPROVAL OF DUMACK ENGINEERING IS NOT PERMITTED. THE REPRODUCTION OF A COPY OF THIS PLAN FOR THE PURPOSE OF CREATING ADDITIONAL COPIES OR REVISING SAID PLAN SHALL, IN NO CIRCUMSTANCE, BE APPROVED. VIOLATION OF THIS RESTRICTION SHALL BE CONSIDERED A VIOLATION OF BOTH THE PROFESSIONAL CODE OF ETHICS AND A THEFT OF CORPORATE ASSETS, BOTH OF WHICH SHALL BE PROSECUTED TO THE FULLEST EXTENT OF CURRENT STATUTES.
THIS PLAN HAS BEEN SPECIFICALLY PREPARED FOR THE OWNER DESIGNATED HEREON, ANY MODIFICATION, REVISION, DUPLICATION OR USE WITHOUT THE WRITTEN CONSENT OF DUMACK ENGINEERING IS PROHIBITED. RELIANCE ON THIS PLAN FOR ANY PURPOSE OTHER THAN THAT WHICH IT IS INTENDED SHALL BE AT THE SOLE DISCRETION AND LIABILITY OF THE APPLICABLE PARTY.

THIS PROJECT HAS BEEN PREPARED FOR MUNICIPAL PURPOSES. ADDITIONAL INFORMATION MAY BE REQUIRED FOR CONSTRUCTION.

ALL DIMENSIONS MUST BE VERIFIED BY CONTRACTOR AND OWNER MUST BE NOTIFIED OF ANY DISCREPANCIES BEFORE PROCEEDING WITH THE WORK.

© - 2013, DUMACK ENGINEERING - ALL RIGHTS RESERVED

NOT VALID WITHOUT AN EMBOSSED SEAL OR SIGNATURE IN RED INK.

COMMONWEALTH OF PENNSYLVANIA — REGISTERED PROFESSIONAL — HEATH ALAN DUMACK — ENGINEER — PE-051685-E

HEATH A. DUMACK, P.E. & P.L.S.
PA P.E. LICENSE No. PE-051685-E
PA P.L.S. LICENSE No. SU-054500-E

DUMACK ENGINEERING
A PROFESSIONAL CORPORATION
ESTABLISHED IN 1964
CIVIL - STRUCTURAL ENGINEERS & SURVEYORS

PENNS PARK OFFICE
677 DURHAM ROAD
P.O. BOX 487
PENNS PARK, PA 18943
PHONE: (215) 598-1230
FAX: (215) 598-1232

ROYERSFORD OFFICE
P.O. BOX 809
ROYERSFORD, PA 19468
PHONE:(610) 489-9449
FAX: (610) 489-9449

www.Dumack.com

REV No.	DATE	REVISION
1		
2		
3		
4		
5		
6		
7		
8		
9		
10		
11		
12		
13		
14		
15		
16		
17		
18		
19		
20		

PRELIMINARY AS FINAL
NOT FOR RECORDING

EXISTING PARCEL INFO:
T.M.P. No. 02-036-008
DEED BOOK: 2587 PAGE No. 1053
CURRENT ZONING: R-A-1

OWNER of RECORD:
SAMARPAN HINDU TEMPLE
2746 MECHANICSVILLE ROAD
BENSALEM, PA 19020

APPLICANT:
SAME AS ABOVE

0
GRAPHIC SCALE

LANDSCAPE DETAILS
2746 MECHANICSVILLE ROAD
BENSALEM TOWNSHIP
BUCKS COUNTY, PA

DRAWN BY: A.E.Y.	CHECKED BY: H.A.D.
SCALE: N.T.S.	PROJECT No: 5447
PLAN DATE: OCT. 5, 2016	SHEET No: 11 of 17

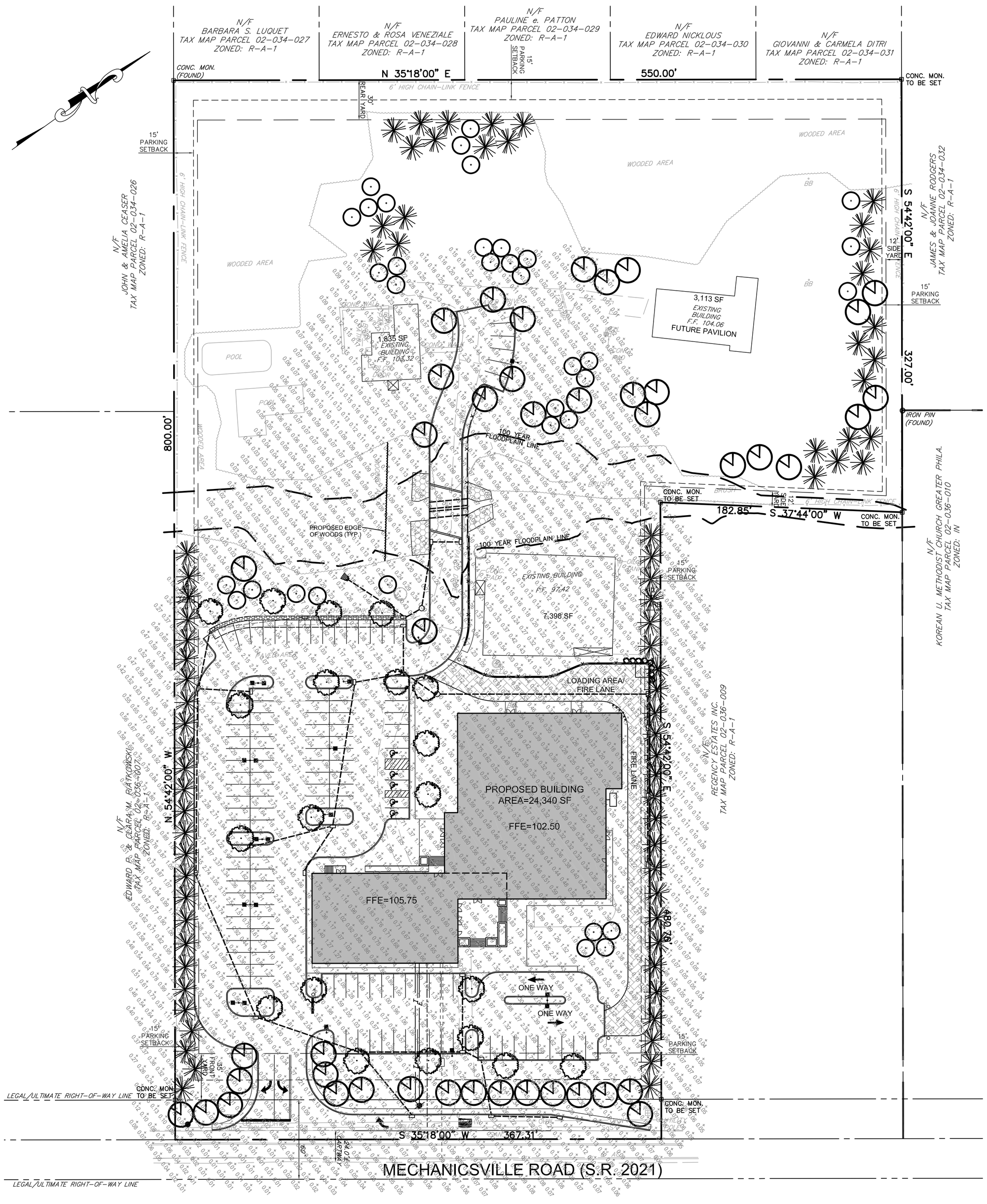

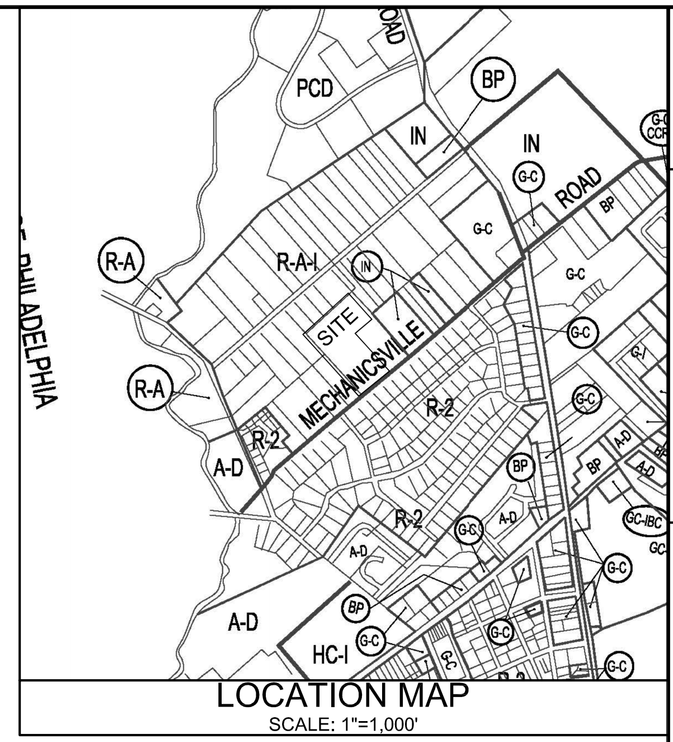

Samarpan Hindu Temple (5447) LUMINAIRE SCHEDULE							
TYP	SYMBOL	DESCRIPTION	LAMP	LUMENS	MOUNTING/BALLAST	LLF	QTY
20		PHILIPS GARDCO (1) "400W" PAEM-FH-400PSMH	(1)	40000		1.00	6
200		PHILIPS GARDCO (2) "400W" PAEM-FH-400PSMH	(2)	40000		1.00	6

LIGHTING NOTES

1. THE INITIAL FOOTCANDLES ILLUSTRATED ON THIS PLAN FOR THE PROPOSED SITE LIGHTING IS CONCEPTUAL AND MAY VARY SLIGHTLY UPON INSTALLATION DUE TO SUCH SITE FEATURES AS LANDSCAPING AND FINAL ARCHITECTURAL DESIGN OF THE PROPOSED BUILDINGS.
2. SHIELDING WILL BE PLACED ON ALL LIGHTING FIXTURES AS NECESSARY TO PREVENT OR REDUCE ANY GLARE ONTO ADJACENT PROPERTIES OR ROADWAYS.
3. THE FOLLOWING LIGHTING FIXTURES ARE PROPOSED FOR THIS SITE (AN APPROVED EQUAL MAY BE SUBSTITUTED AT TIME OF CONSTRUCTION)
4. THE LOCATION OF UNDERGROUND CONDUIT, ELECTRICAL CONNECTION, CONDUIT AND TRENCH RESTORATION DETAIL, AND WIRING SHALL BE PROVIDED BY OTHERS

PHILLIPS LIGHTING COMPANY, INFINITY II, DESIGN NUMBER PAEM-FH-400HPS, MOUNTED 20' HEIGHT.
6 PROPOSED SINGLE FIXTURES
6 PROPOSED DOUBLE FIXTURES

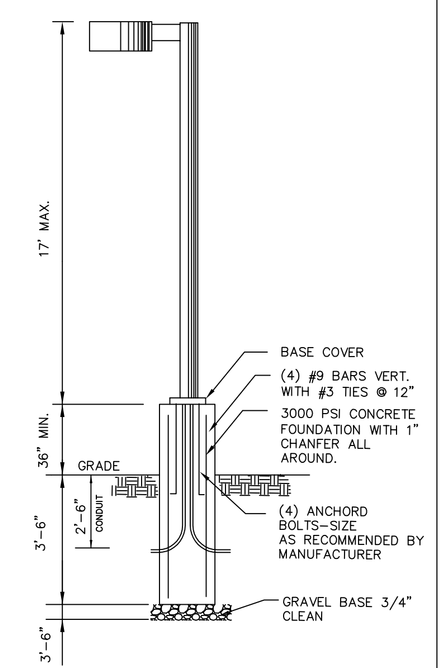

LIGHT FIXTURE DETAIL
NOT AT SCALE

General Notes:

1. Refer to plan entitled "Landscape Details" for all landscape notes and details.
2. No existing or proposed structures or plantings, highest point of which is 2 feet above the centerline of the roadway, shall be permitted within the clear sight triangles.
3. After tree protection fencing has been installed, it shall be inspected and approved by the Township Engineer.

Legend

- Tract Boundary Line
- Legal Right-of-Way
- Existing Sanitary Sewer (SaS)
- Existing Water Main (W)
- Existing Storm Sewer
- Existing Gas Main (G)
- Existing Electric (E)
- Existing Telephone (T)
- Existing Treeline
- Proposed Centerline of Road
- Proposed Building Setback Line
- Proposed Water Service
- Proposed Sanitary Sewer Lateral
- Proposed Curb
- Existing Utility Pole
- Existing Valve

SERIAL NO. 2016-2450730
CALL BEFORE YOU DIG!
PENNSYLVANIA LAW REQUIRES 3 WORKING DAYS NOTICE FOR CONSTRUCTION PHASE AND 10 WORKING DAYS IN DESIGN STAGE-STOP CALL
PENNSYLVANIA ONE CALL SYSTEM, INC.
1-800-242-1776

INFORMATION SHOWN ON THIS PLAN IS THE RESULT OF A PROFESSIONAL SERVICE RENDERED BY AND IS OWNED BY DUMACK ENGINEERING. ANY REPRODUCTION OR REVISION WITHOUT APPROVAL OF DUMACK ENGINEERING IS NOT PERMITTED. ACCEPTANCE OF THIS PLAN CONSTITUTES AGREEMENT THAT THE SOLE PURPOSE OF CREATING ADDITIONAL COPIES OR REVISING SAID PLAN SHALL BE FOR THE PROJECT AS DESCRIBED HEREIN. ACCEPTANCE OF THIS RESTRICTION SHALL BE CONSIDERED A VIOLATION OF BOTH STATE AND FEDERAL COPYRIGHT AND TRADE SECRET LAWS AND ANY CORPORATE ASSETS, BOTH OF WHICH SHALL BE PROSECUTED TO THE FULLEST EXTENT OF THE LAW.
THIS PLAN HAS BEEN SPECIFICALLY PREPARED FOR THE OWNER AND DEVELOPMENT INDICATED AND ANY USE OR AMENDMENT OR USE WITHOUT THE WRITTEN CONSENT OF DUMACK ENGINEERING SHALL BE AT THE SOLE RISK OF THE USER AND FOR ANY PURPOSE OTHER THAN THAT WHICH IT IS INTENDED SHALL BE WITHOUT LIABILITY TO DUMACK ENGINEERING AND ITS OWNER IN PART OR SOLE DISCRETION AND LIABILITY OF THE APPLICABLE PARTY.
THIS PROJECT HAS BEEN PREPARED FOR MUNICIPAL PURPOSES. ADDITIONAL INFORMATION MAY BE REQUIRED FOR CONSTRUCTION. OWNER MUST BE NOTIFIED OF ANY DISCREPANCIES BEFORE PROCEEDING WITH THE WORK.
© - 2013, DUMACK ENGINEERING - ALL RIGHTS RESERVED

NOT VALID WITHOUT AN EMBOSSED SEAL, OR SIGNATURE IN RED INK.

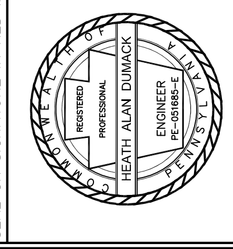

HEATH ALAN DUMACK, P.E. & P.L.S.
PRESIDENT - DUMACK ENGINEERING
PA P.E. LICENSE No. SU-054500-E

DUMACK ENGINEERING
ESTABLISHED IN 1964
A PROFESSIONAL CORPORATION
CIVIL - STRUCTURAL ENGINEERS & SURVEYORS
www.Dumack.com

PENNS PARK OFFICE
677 DURHAM ROAD
P.O. BOX 487
PENNS PARK, PA 18943
PHONE: (215) 598-3230
FAX: (215) 598-1222

ROYERSFORD OFFICE
P.O. BOX 909
ROYERSFORD, PA 19468
TELEPHONE: (610) 489-4949
FAX: (610) 489-9449

REV No.	DATE	REVISION
1		
2		
3		
4		
5		
6		
7		
8		
9		
10		
11		
12		
13		
14		
15		
16		
17		
18		
19		
20		

PRELIMINARY AS FINAL
NOT FOR RECORDING

EXISTING PARCEL INFO:
T.M.P. No. 02-036-008
DEED BOOK: 2587 PAGE No. 1053
CURRENT ZONING: R-A-1

OWNER of RECORD:
SAMARPAN HINDU TEMPLE
2746 MECHANICSVILLE ROAD
BENSALEM, PA 19020

APPLICANT:
SAME AS ABOVE

40 0 20 40
GRAPHIC SCALE

LIGHTING PLAN
2746 MECHANICSVILLE ROAD
BENSALEM TOWNSHIP
BUCKS COUNTY, PA

DRAWN BY:	CHECKED BY:
A.E.Y.	H.A.D.
SCALE: 1"=40'	PROJECT No: 5447
PLAN DATE: OCT. 5, 2016	SHEET No: 12 OF 17

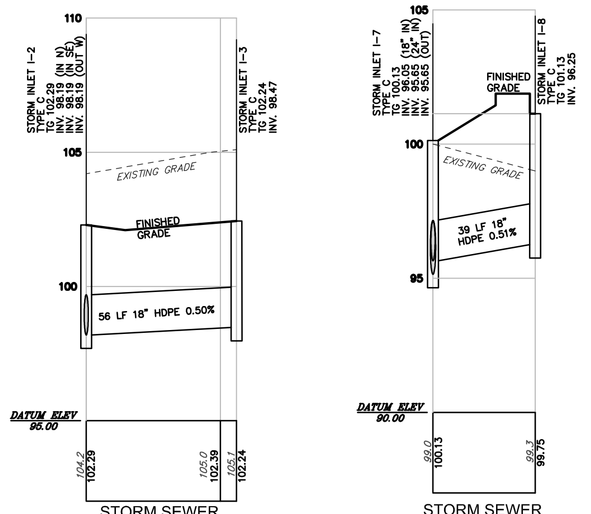

STORM SEWER PROFILE
INLET I-2 TO INLET I-3

HORIZONAL SCALE: 1"=40'
VERTICAL SCALE: 1"=4'

STORM SEWER PROFILE
INLET I-7 TO INLET I-8

HORIZONAL SCALE: 1"=40'
VERTICAL SCALE: 1"=4'

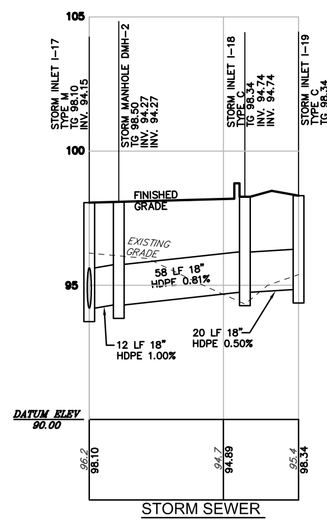

STORM SEWER PROFILE
INLET I-17 TO INLET I-19

HORIZONAL SCALE: 1"=40'
VERTICAL SCALE: 1"=4'

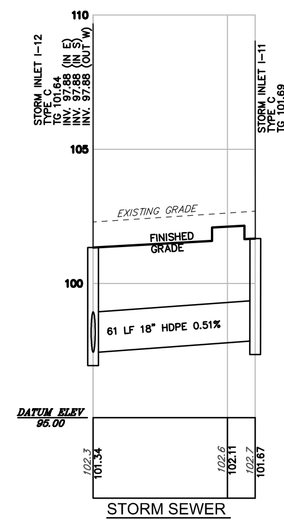

STORM SEWER PROFILE
INLET I-12 TO INLET I-11

HORIZONAL SCALE: 1"=40'
VERTICAL SCALE: 1"=4'

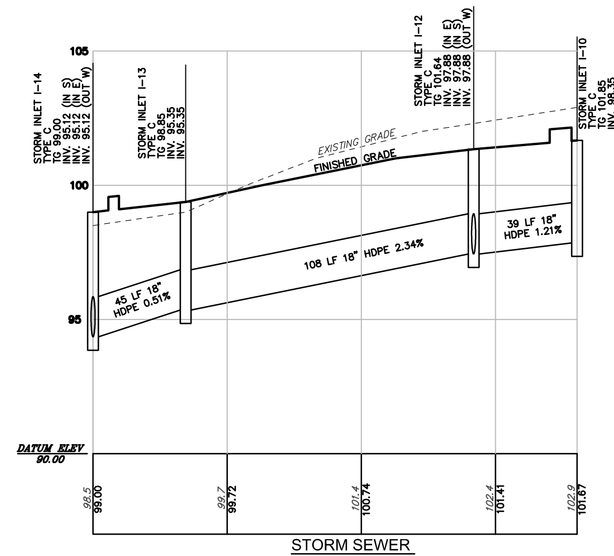

STORM SEWER PROFILE
INLET I-14 TO INLET I-10

HORIZONAL SCALE: 1"=40'
VERTICAL SCALE: 1"=4'

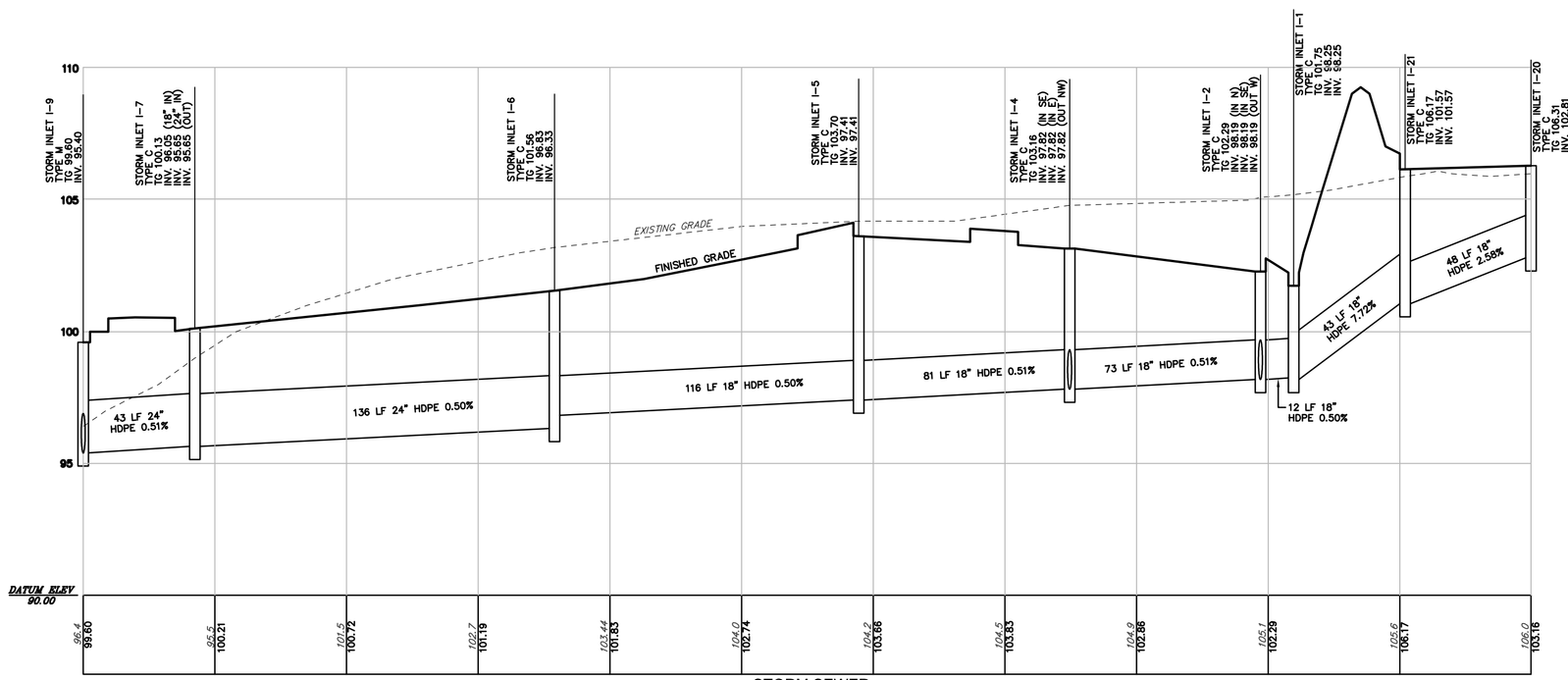

STORM SEWER PROFILE
INLET I-9 TO INLET I-20

HORIZONAL SCALE: 1"=40'
VERTICAL SCALE: 1"=4'

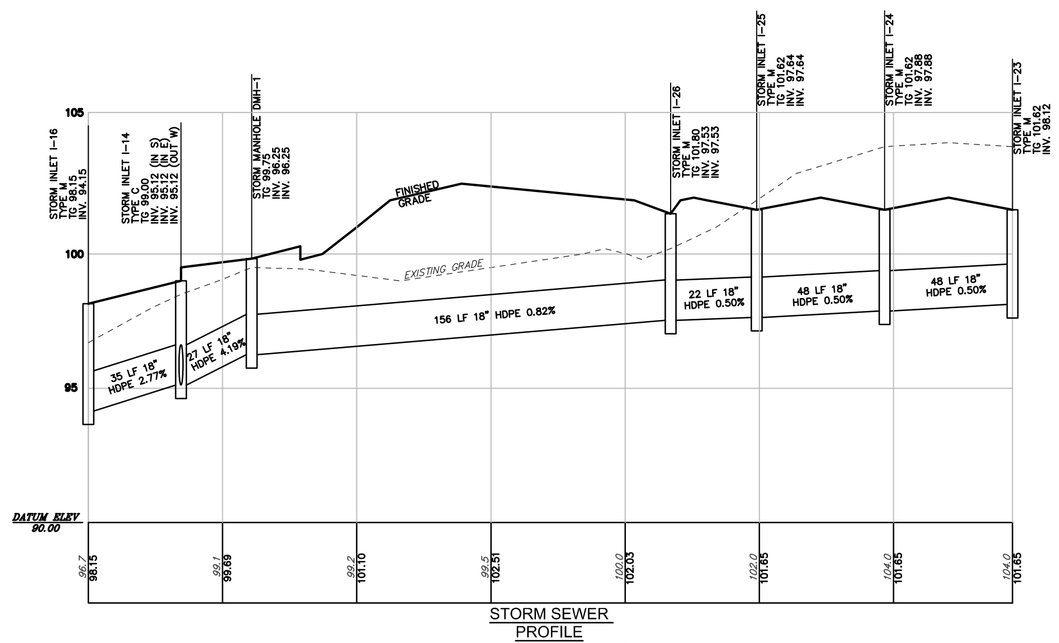

STORM SEWER PROFILE
INLET I-16 TO INLET I-23

HORIZONAL SCALE: 1"=40'
VERTICAL SCALE: 1"=4'

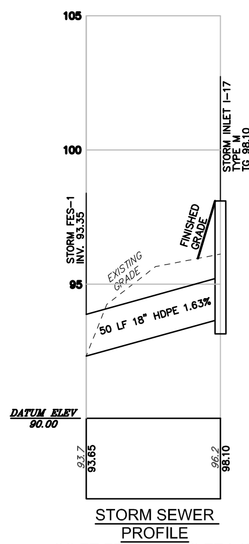

STORM SEWER PROFILE
INLET FES-1 TO INLET I-17

HORIZONAL SCALE: 1"=40'
VERTICAL SCALE: 1"=4'

SERIAL NO. 2016-2450730

CALL BEFORE YOU DIG!
PENNSYLVANIA LAW REQUIRES 3 WORKING DAYS NOTICE FOR CONSTRUCTION PHASE AND 10 WORKING DAYS IN DESIGN STAGE-STOP CALL
PENNSYLVANIA ONE CALL SYSTEM, INC.
1-800-242-1776

INFORMATION SHOWN ON THIS PLAN IS THE RESULT OF A PROFESSIONAL SERVICE RENDERED BY AND IS OWNED BY DUMACK ENGINEERING. UNAUTHORIZED USE OF THIS PLAN WITHOUT APPROVAL OF DUMACK ENGINEERING IS NOT PERMITTED. UNAUTHORIZED USE INCLUDES, BUT IS NOT LIMITED TO, THE USE OF CREATING ADDITIONAL COPIES OR REVISING SAID PLAN WITHOUT THE WRITTEN CONSENT OF DUMACK ENGINEERING. IN THE EVENT THAT THIS RESTRICTION SHALL BE CONSIDERED A VIOLATION OF BOTH FEDERAL AND PENNSYLVANIA LAW AS A MISUSE OF BOTH CORPORATE ASSETS, BOTH OF WHICH SHALL BE PROSECUTED TO THE FULLEST EXTENT OF THE LAW.
THIS PLAN HAS BEEN SPECIFICALLY PREPARED FOR THE OWNER LISTED HEREON AND IS NOT TO BE USED BY ANY OTHER PERSON OR USE WITHOUT THE WRITTEN CONSENT OF DUMACK ENGINEERING. DUMACK ENGINEERING IS NOT RESPONSIBLE FOR ANY PURPOSE OTHER THAN THAT WHICH IT IS INTENDED SHALL BE PARTY, SOLE DISCRETION AND LIABILITY OF THE APPLICABLE PARTY.
THIS PROJECT HAS BEEN PREPARED FOR MUNICIPAL PURPOSES. ADDITIONAL INFORMATION MAY BE REQUIRED FOR CONSTRUCTION.
ALL DIMENSIONS MUST BE FIELD VERIFIED. OWNER MUST BE NOTIFIED OF ANY DISCREPANCIES BEFORE PROCEEDING WITH THE WORK.
© - 2013, DUMACK ENGINEERING - ALL RIGHTS RESERVED

NOT VALID WITHOUT AN EMBOSSED SEAL OR SIGNATURE IN RED INK.

COMMONWEALTH OF PENNSYLVANIA REGISTERED PROFESSIONAL HEATH ALAN DUMACK ENGINEER

HEATH A. DUMACK, P.E. & P.L.S.
PRESIDENT & CHIEF ENGINEER
PA P.E. LICENSE No. SU-054500-E
PA P.L.S. LICENSE No. SU-054500-E

DUMACK ENGINEERING
A PROFESSIONAL CORPORATION
ESTABLISHED IN 1964
CIVIL - STRUCTURAL ENGINEERS & SURVEYORS

PENNS PARK OFFICE
677 DURHAM ROAD
P.O. BOX 487
PENNS PARK, PA 18943
PHONE: (215) 598-1230
FAX: (215) 598-1232

ROYERSFORD OFFICE
P.O. BOX 809
ROYERSFORD, PA 19468
PHONE: (610) 489-4949
FAX: (610) 489-8449

www.Dumack.com

REV. No.	DATE	REVISION
1		
2		
3		
4		
5		
6		
7		
8		
9		
10		
11		
12		
13		
14		
15		
16		
17		
18		
19		
20		

PRELIMINARY AS FINAL
NOT FOR RECORDING

EXISTING PARCEL INFO:
T.M.P. No. 02-036-008
DEED BOOK: 2587 PAGE No. 1053
CURRENT ZONING: R-A-1

OWNER of RECORD:
SAMARPAN HINDU TEMPLE
2746 MECHANICSVILLE ROAD
BENSALEM, PA 19020

APPLICANT:
SAME AS ABOVE

40 0 20 40
GRAPHIC SCALE

UTILITY PROFILES
2746 MECHANICSVILLE ROAD

BENSALEM TOWNSHIP
BUCKS COUNTY, PA

DRAWN BY:	CHECKED BY:
A.E.Y.	H.A.D.
SCALE: AS SHOWN	PROJECT No: 5447
PLAN DATE: OCT. 5, 2016	SHEET No: 13 OF 17

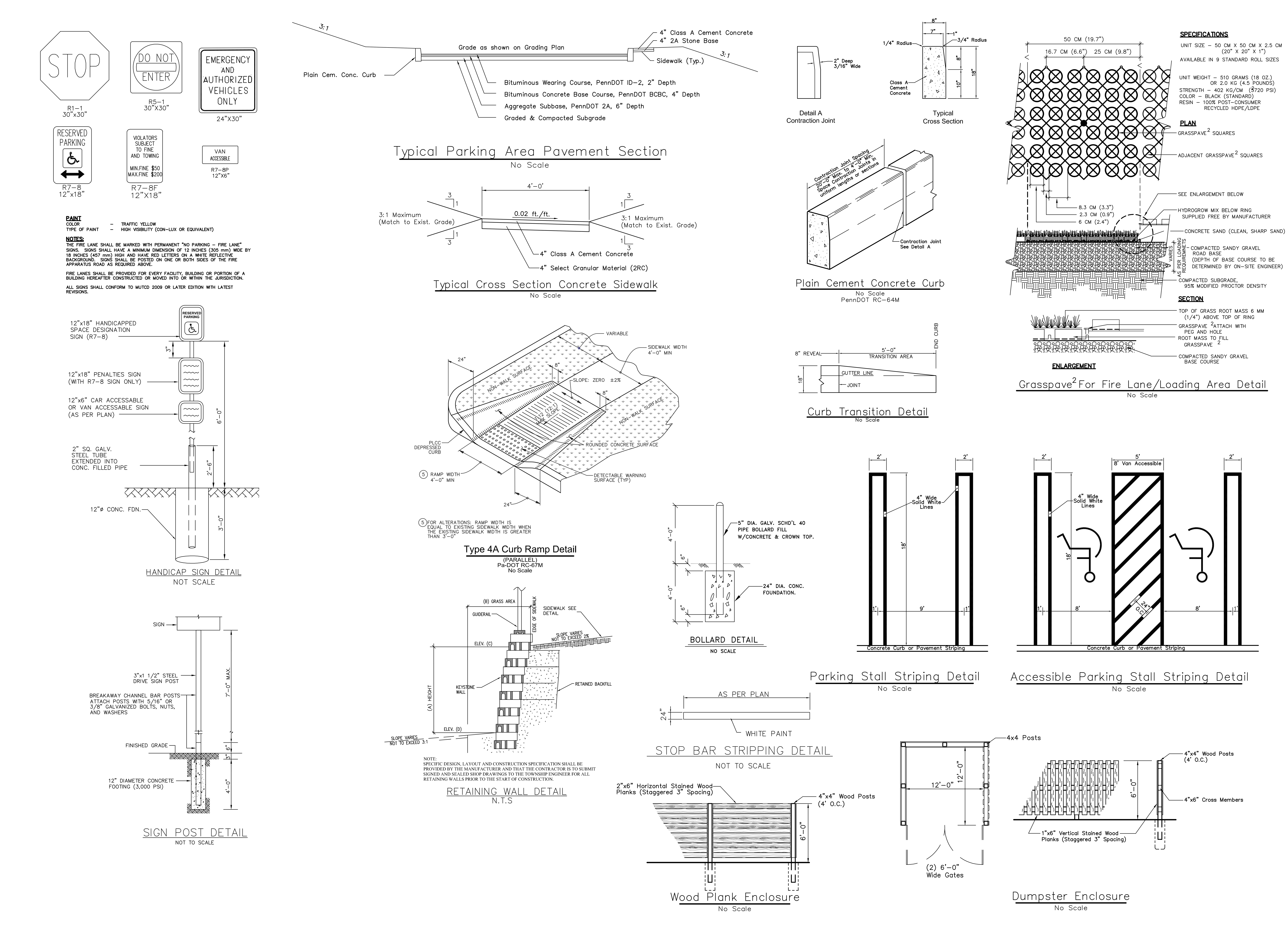

SERIAL NO. 2016-2450730
CALL BEFORE YOU DIG!
PENNSYLVANIA LAW REQUIRES 3 WORKING DAYS NOTICE FOR CONSTRUCTION PHASE AND 10 WORKING DAYS IN DESIGN STAGE-STOP CALL
PENNSYLVANIA ONE CALL SYSTEM, INC.
1-800-242-1776

INFORMATION SHOWN ON THIS PLAN IS THE RESULT OF A PROFESSIONAL SERVICE RENDERED BY AND IS OWNED BY DUMACK ENGINEERING. REPRODUCTION OF THIS PLAN WITHOUT APPROVAL OF DUMACK ENGINEERING IS NOT PERMITTED. THE REPRODUCTION OF A COPY OF THIS PLAN FOR THE PURPOSE OF CREATING ADDITIONAL COPIES OR REVISING SAID PLAN SHALL, IN NO CIRCUMSTANCE, BE APPROVED. VIOLATION OF THIS RESTRICTION SHALL BE CONSIDERED A VIOLATION OF BOTH THE PROFESSIONAL CODE OF ETHICS AND A THEFT OF CORPORATE ASSETS, BOTH OF WHICH SHALL BE PROSECUTED TO THE FULLEST EXTENT OF CURRENT STATUTES.
THIS PLAN HAS BEEN SPECIFICALLY PREPARED FOR THE OWNER DESIGNATED HEREON, ANY MODIFICATION, REVISION, DUPLICATION OR USE WITHOUT THE WRITTEN CONSENT OF DUMACK ENGINEERING IS PROHIBITED. RELIANCE ON THIS PLAN FOR ANY PURPOSE OTHER THAN THAT WHICH IT IS INTENDED SHALL BE AT THE SOLE DISCRETION AND LIABILITY OF THE APPLICABLE PARTY.

THIS PROJECT HAS BEEN PREPARED FOR MUNICIPAL PURPOSES. ADDITIONAL INFORMATION MAY BE REQUIRED FOR CONSTRUCTION.

ALL DIMENSIONS MUST BE VERIFIED BY CONTRACTOR AND OWNER MUST BE NOTIFIED OF ANY DISCREPANCIES BEFORE PROCEEDING WITH THE WORK.

© – 2013, DUMACK ENGINEERING – ALL RIGHTS RESERVED

NOT VALID WITHOUT AN EMBOSSED SEAL OR SIGNATURE IN RED INK.

COMMONWEALTH OF PENNSYLVANIA
REGISTERED PROFESSIONAL
HEATH ALAN DUMACK
ENGINEER
PE-051685-E

HEATH A. DUMACK, P.E. & P.L.S.
PA P.E. LICENSE No. PE-051685-E
PA P.L.S. LICENSE No. SU-054500-E

DUMACK ENGINEERING
ESTABLISHED IN 1964
A PROFESSIONAL CORPORATION
CIVIL - STRUCTURAL ENGINEERS & SURVEYORS

PENNS PARK OFFICE
677 DURHAM ROAD
P.O. BOX 487
PENNS PARK, PA 18943
PHONE: (215) 598-1230
FAX: (215) 598-1232

ROYERSFORD OFFICE
P.O. BOX 809
ROYERSFORD, PA 19468
PHONE:(610) 489-9449
FAX: (610) 489-9449

www.Dumack.com

REV No.	DATE	REVISION
1		
2		
3		
4		
5		
6		
7		
8		
9		
10		
11		
12		
13		
14		
15		
16		
17		
18		
19		
20		

PRELIMINARY AS FINAL
NOT FOR RECORDING

EXISTING PARCEL INFO:
T.M.P. No. 02-036-008
DEED BOOK: 2587 PAGE No. 1053
CURRENT ZONING: R-A-1

OWNER of RECORD:
SAMARPAN HINDU TEMPLE
2746 MECHANICSVILLE ROAD
BENSALEM, PA 19020

APPLICANT:
SAME AS ABOVE

0
GRAPHIC SCALE

CONSTRUCTION DETAILS
2746 MECHANICSVILLE ROAD

BENSALEM TOWNSHIP
BUCKS COUNTY, PA

DRAWN BY: A.E.Y.
CHECKED BY: H.A.D.
SCALE: N.T.S.
PROJECT No: 5447
PLAN DATE: OCT. 5, 2016
SHEET No. 14 OF 17

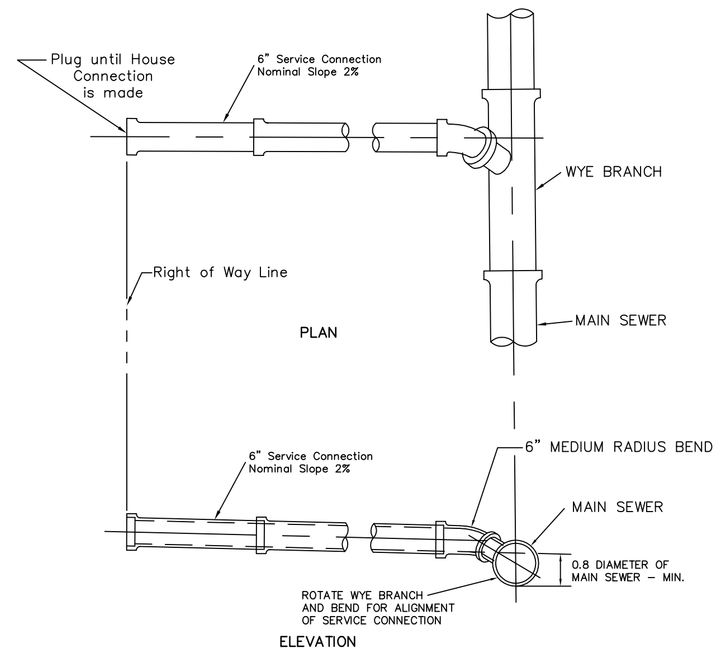

Typical Wye Branch Service Connection Shallow Sewer

No Scale

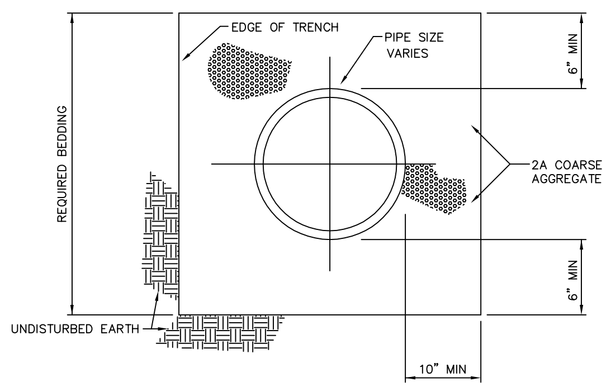

STANDARD PIPE BEDDING DETAIL

N.T.S.

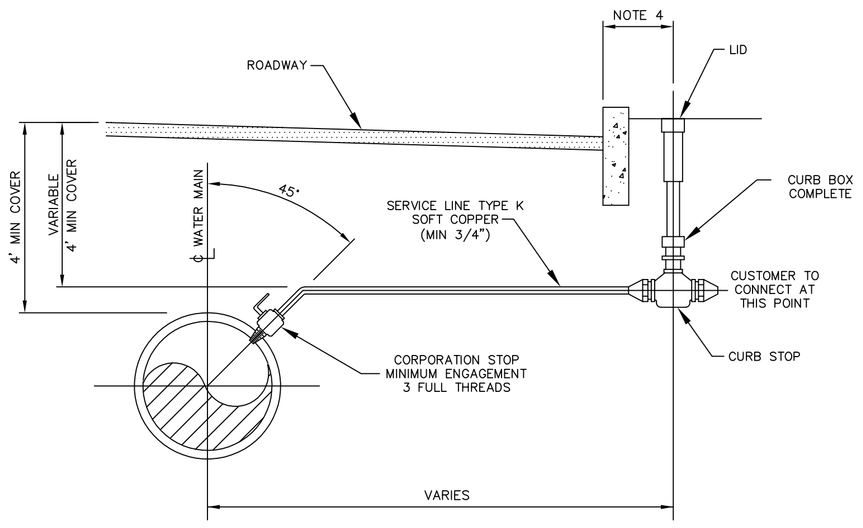

NOTES:

1. FOR STANDARD 3/4" CONNECTION, PROVIDE A TAPPED COUPLING WITH THREADED INSERT OR DOUBLE-STRAPPED SADDLE CLAMP.
2. DO NOT PLACE CURB STOP IN PAVED AREAS.
3. ALL SERVICE CONNECTIONS SHALL BE LOCATED AT THE MIDPOINT BETWEEN SIDE LOT LINES OR AS DIRECTED BY A AQUA PA FIELD REPRESENTATIVE.
4. WHERE SIDEWALK PARALLELS ROADWAY, THE CURB BOX SHALL BE PLACED BETWEEN THE CURB AND SIDEWALK. ALL OTHER LOCATIONS, CURB BOX TO BE PLACED AS DIRECTED BY A AQUA PA FIELD REPRESENTATIVE.

STANDARD SERVICE CONNECTION

(NTS)

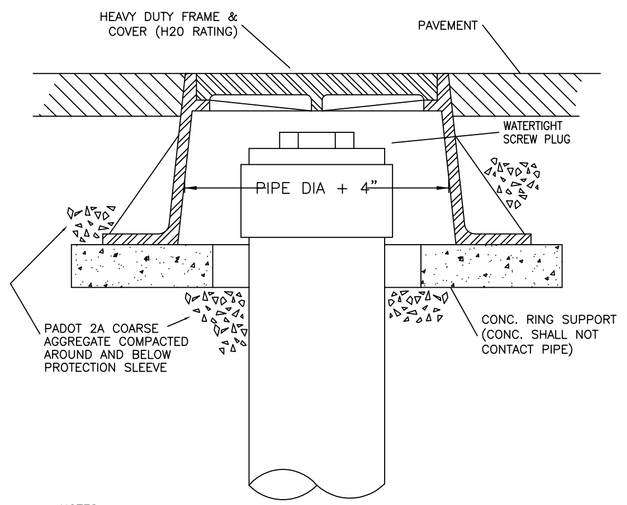

NOTES:

1. FRAME AND COVER SHALL BE NEENAH FOUNDRY COMPANY MODEL R-1976 OR APPROVED EQUAL
2. CLEAN-OUT PROTECTION SLEEVES ARE TO BE INSTALLED FOR CLEAN-OUTS LOCATED IN PAVED AREAS, OR LESS THAN 3 FEET FROM A PAVED AREA.

CLEAN-OUT PROTECTION SLEEVE
(FOR USE IN OR NEAR PAVED AREAS)
NO SCALE

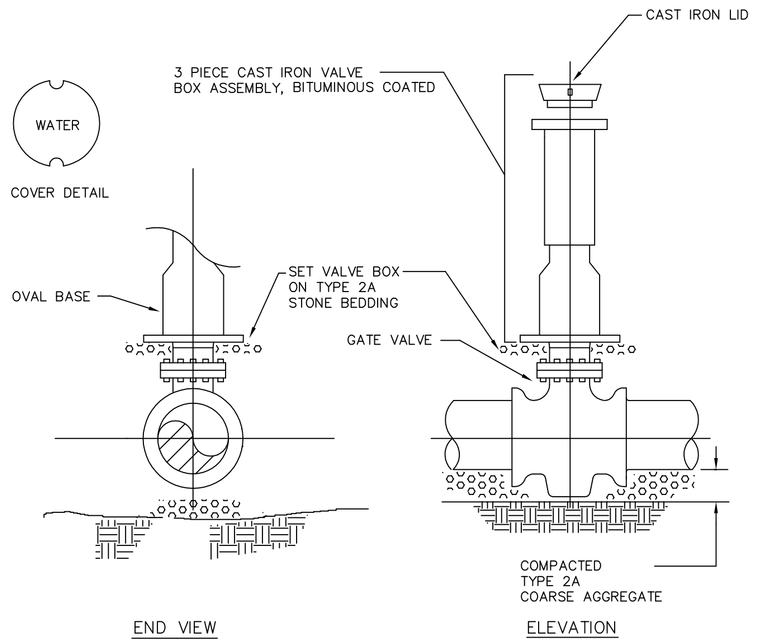

STANDARD GATE VALVE AND VALVE BOX

N.T.S.

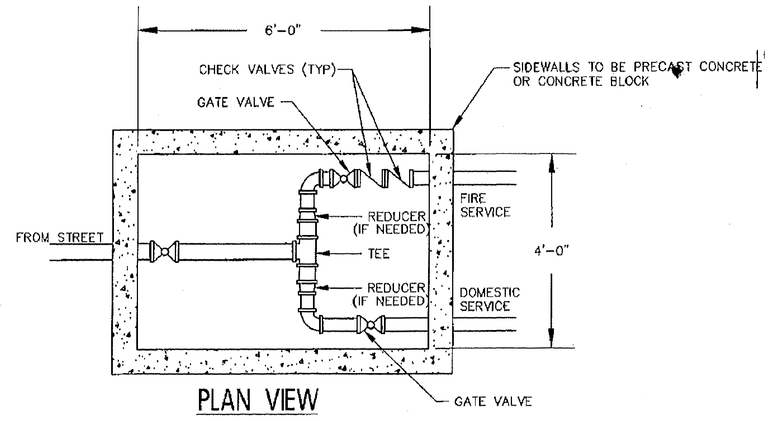

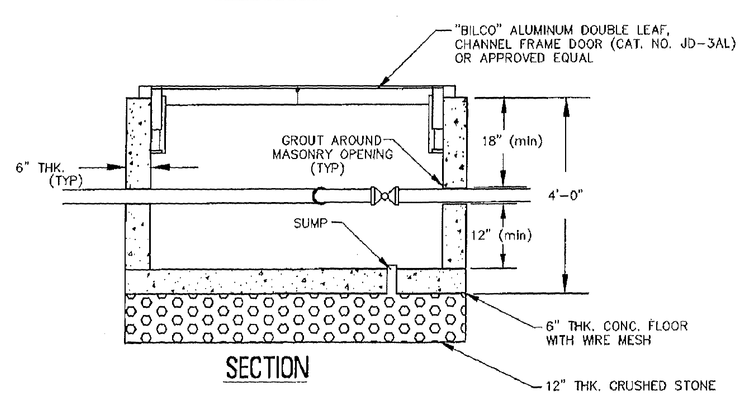

METER PIT WITH FIRE SERVICE

N.T.S.

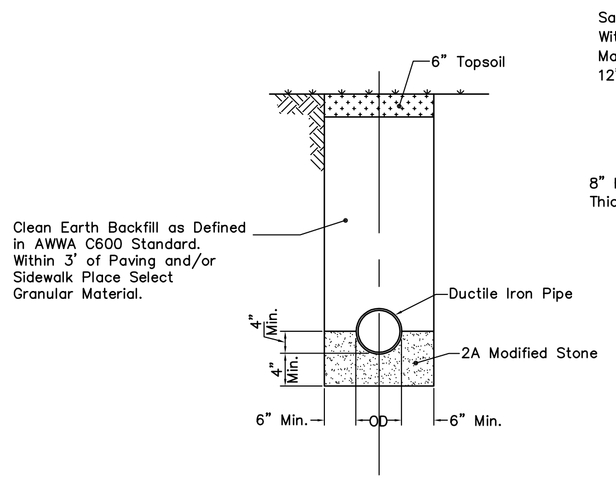

TRENCH IN UNPAVED AREAS

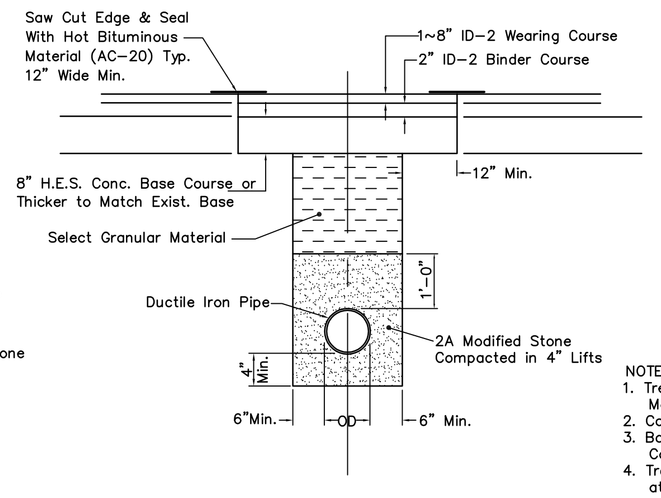

TRENCH IN EXISTING PAVED AREAS FINAL RESTORATION WITHIN 90 DAYS

NOTES:
1. Trench Backfill Shall be Placed and Compacted in Maximum 8" Lifts Unless Noted Otherwise.
2. Compaction Shall be 90% Standard Proctor.
3. Backfill in Unpaved Areas Shall be Mounded to Compensate For Possible Trench Settlement.
4. Trench at Sidewalks Shall be Similar to Trenches at Paved Areas.

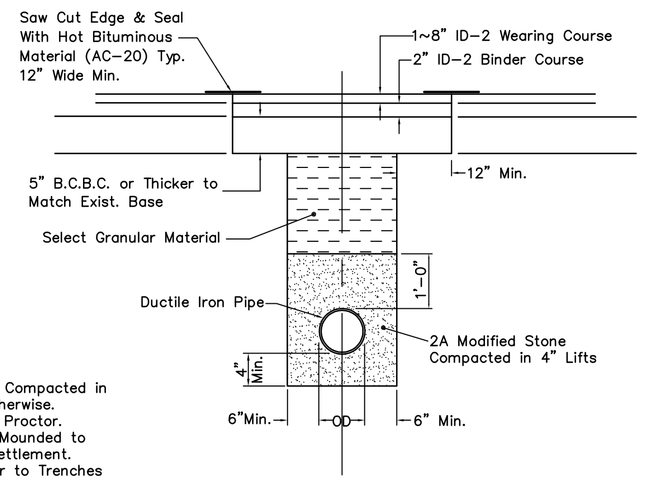

TRENCH IN EXISTING PAVED AREAS FINAL RESTORATION AFTER 90 DAYS

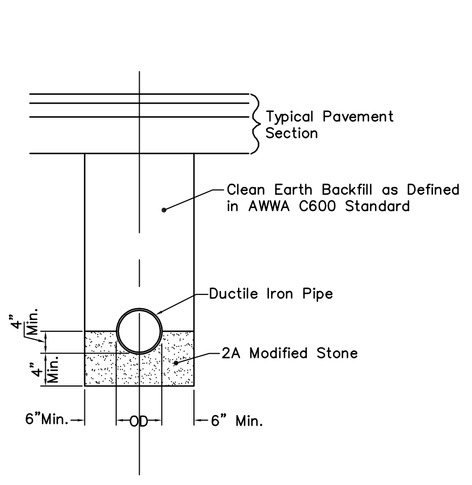

TRENCH IN PROPOSED PAVED AREAS FINAL PAVING AFTER 90 DAYS

Water Main Trench Replacement Detail

No Scale

SERIAL NO. 2016-2450730
CALL BEFORE YOU DIG!
PENNSYLVANIA LAW REQUIRES 3 WORKING DAYS NOTICE FOR CONSTRUCTION PHASE AND 10 WORKING DAYS IN DESIGN STAGE-STOP CALL
PENNSYLVANIA ONE CALL SYSTEM, INC.
1-800-242-1776

INFORMATION SHOWN ON THIS PLAN IS THE RESULT OF A PROFESSIONAL SERVICE RENDERED BY AND IS OWNED BY DUMACK ENGINEERING. ANY USE OF THIS PLAN WITHOUT THE APPROVAL OF DUMACK ENGINEERING IS NOT PERMITTED. ANYONE USING ADDITIONAL COPIES OR REVISING SAID PLAN OF CREATING ADDITIONAL COPIES OR REVISING SAID PLAN WITHOUT THE WRITTEN CONSENT OF DUMACK ENGINEERING IS IN VIOLATION OF THE COPYRIGHT LAWS OF THE U.S.A. AND THIS RESTRICTION SHALL BE CONSIDERED A VIOLATION OF BOTH FEDERAL AND STATE LAWS AND SHALL BE PROSECUTED TO THE FULLEST EXTENT OF THE LAW. ANY UNAUTHORIZED USE OF THIS PLAN HAS BEEN SPECIFICALLY PREPARED FOR THE OWNER AND IS NOT TO BE USED FOR ANY OTHER PURPOSE OR LOCATION OR USE WITHOUT THE WRITTEN CONSENT OF DUMACK ENGINEERING. ANY REUSE OF THIS PLAN FOR ANY PURPOSE OTHER THAN THAT WHICH IT IS INTENDED SHALL BE AT THE USERS SOLE DISCRETION AND LIABILITY OF THE APPLICABLE PARTY.

THIS PROJECT HAS BEEN PREPARED FOR MUNICIPAL PURPOSES. ADDITIONAL INFORMATION MAY BE REQUIRED FOR FUTURE USE. OWNER MUST BE NOTIFIED OF ANY DISCREPANCIES BEFORE PROCEEDING WITH THE WORK.

© - 2013, DUMACK ENGINEERING – ALL RIGHTS RESERVED

NOT VALID WITHOUT AN EMBOSSED SEAL OR SIGNATURE IN RED INK.

HEATH ALAN DUMACK, ENGINEER, PROFESSIONAL, REGISTERED, COMMONWEALTH OF PENNSYLVANIA

HEATH A. DUMACK, P.E. & P.L.S.
PRINCIPAL LICENSE No. PE-045615-E
PA P.L.S. LICENSE No. SU-054500-E

DUMACK ENGINEERING
ESTABLISHED IN 1964
A PROFESSIONAL CORPORATION
CIVIL - STRUCTURAL ENGINEERS & SURVEYORS
www.Dumack.com

PENNS PARK OFFICE
677 DURHAM ROAD
P.O. BOX 487
PENNS PARK, PA 18943
PHONE: (215) 598-1230
FAX: (215) 598-1222

ROYERSFORD OFFICE
P.O. BOX 809
ROYERSFORD, PA 19468
TELEPHONE: (610) 489-4949
FAX: (610) 489-8449

REV. No.	DATE	REVISION
1		
2		
3		
4		
5		
6		
7		
8		
9		
10		
11		
12		
13		
14		
15		
16		
17		
18		
19		
20		

PRELIMINARY AS FINAL
NOT FOR RECORDING

EXISTING PARCEL INFO:
T.M.P. No. 02-036-008
DEED BOOK: 2587 PAGE No. 1053
CURRENT ZONING: R-A-1

OWNER of RECORD:
SAMARPAN HINDU TEMPLE
2746 MECHANICSVILLE ROAD
BENSALEM, PA 19020

APPLICANT:
SAME AS ABOVE

0
GRAPHIC SCALE

CONSTRUCTION DETAILS
2746 MECHANICSVILLE ROAD
BENSALEM TOWNSHIP
BUCKS COUNTY, PA

DRAWN BY:	CHECKED BY:
A.E.Y.	H.A.D.
SCALE: N.T.S.	PROJECT No: 5447
PLAN DATE: OCT. 5, 2016	SHEET No: 15 OF 17

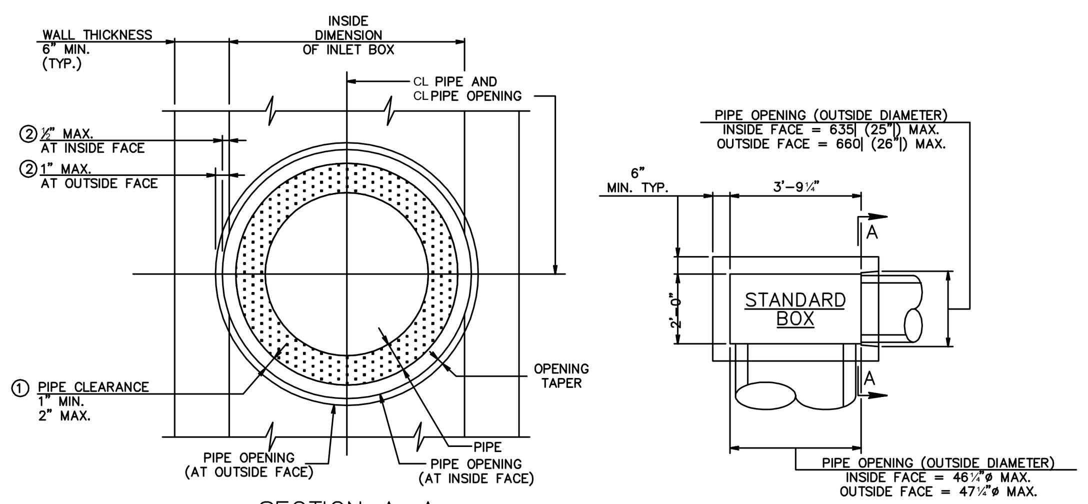

SECTION A–A
(STANDARD INLET BOX ONLY)

LEGEND
① OUTSIDE DIAMETER OF PIPE TO PIPE OPENING
② REDUCTION IN WALL THICKNESS DIMENSION
③ INSIDE FACE OF BOX WALL TO OUTSIDE DIAMETER OF PIPE OPENING

PLAN – INLET BOXES

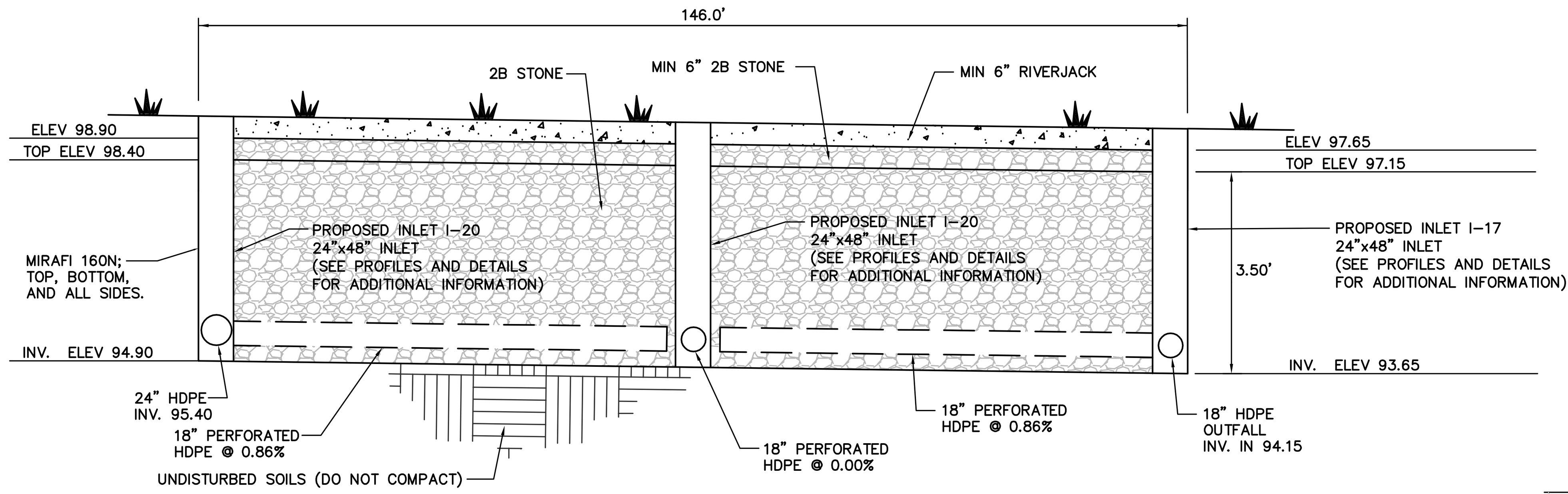

Stone Drywell Detail
No Scale

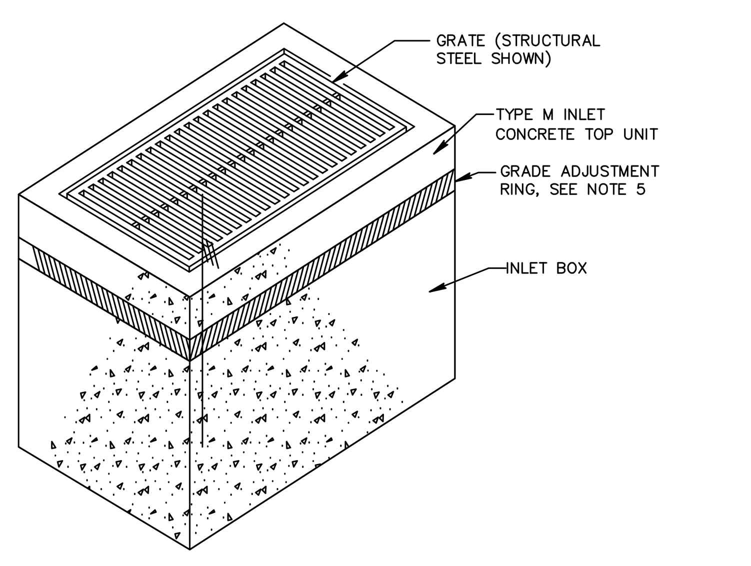

TYPE M INLET

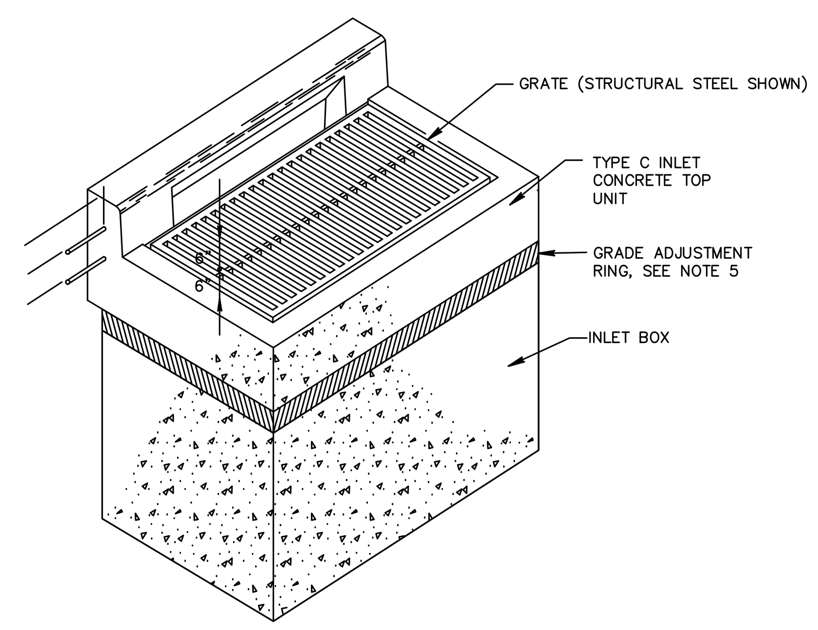

TYPE C INLET

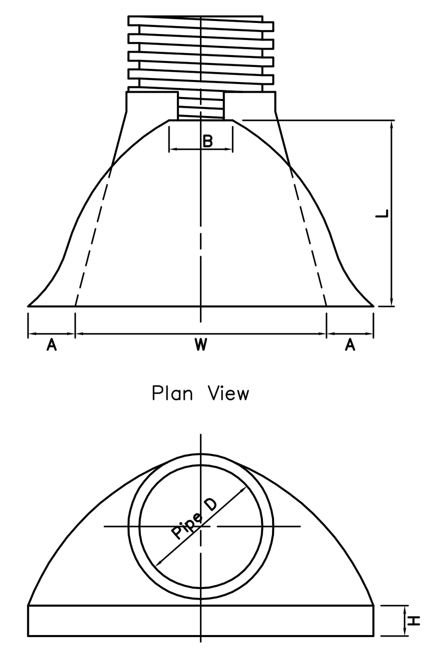

Pipe Diameter	A ±1	B Max	H ±1	L ±~8	W ±2
12, 15	6.5	10	6.5	25	29
18	7.5	15	6.5	32	35
24	7.5	18	6.5	36	45
30	10.5	NA	7.0	53	68
36	10.5	NA	7.0	53	68

All Dimensions in Inches

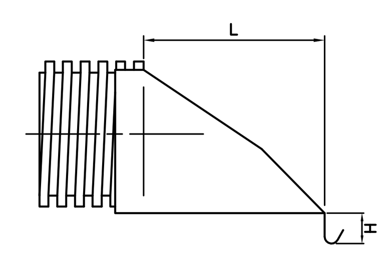

HDPE End Section
No Scale

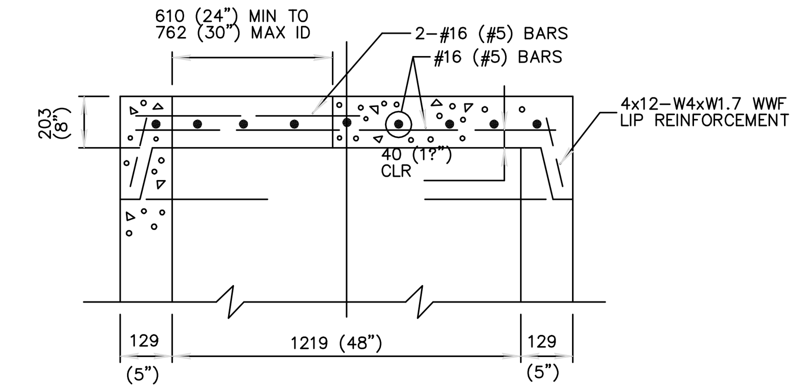

SECTION B–B

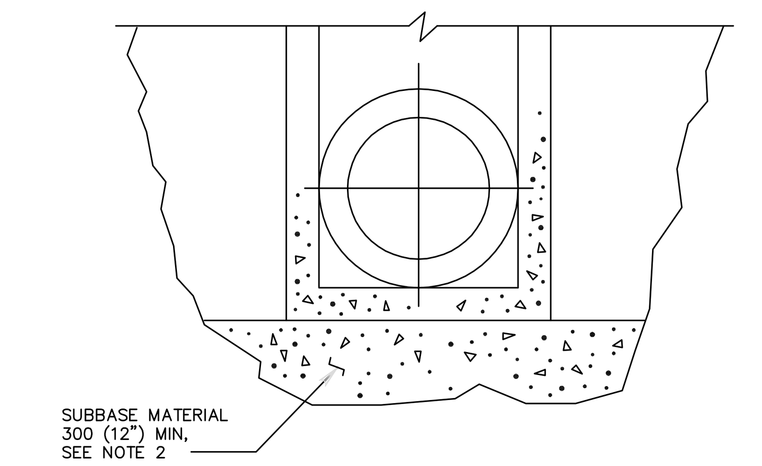

PRECAST MANHOLE
BASE PREPARATION

NOTES

1. PRECAST MANHOLES MEETING THE REQUIREMENTS OF PUBLICATION 408, SECTION 714, MAY BE SUBSTITUTED FOR THE STANDARD CAST–IN–PLACE MANHOLE. FOR DEVIATION OR MODIFICATION OF THE STANDARDS, SUBMIT SHOP DRAWINGS FOR APPROVAL.
2. PLACE SUBBASE MATERIAL MEETING THE REQUIREMENTS OF PUBLICATION 408, SECTION 350.2, IN LAYERS 100 (4") THICK, COMPACTED TO A DENSITY SATISFACTORY TO THE ENGINEER AND INCIDENTAL TO THE MANHOLE PAY ITEM.
3. FOR ALL OTHER DESIGN REQUIREMENTS AND APPLICABLE NOTES, SEE SHEET 3.
4. STORM SEWER MANHOLE INSTALLATION SHALL BE IN ACCORDANCE WITH PENNDOT ROADWAY CONSTRUCTION STANDARDS RC–39M, LATEST EDITION.

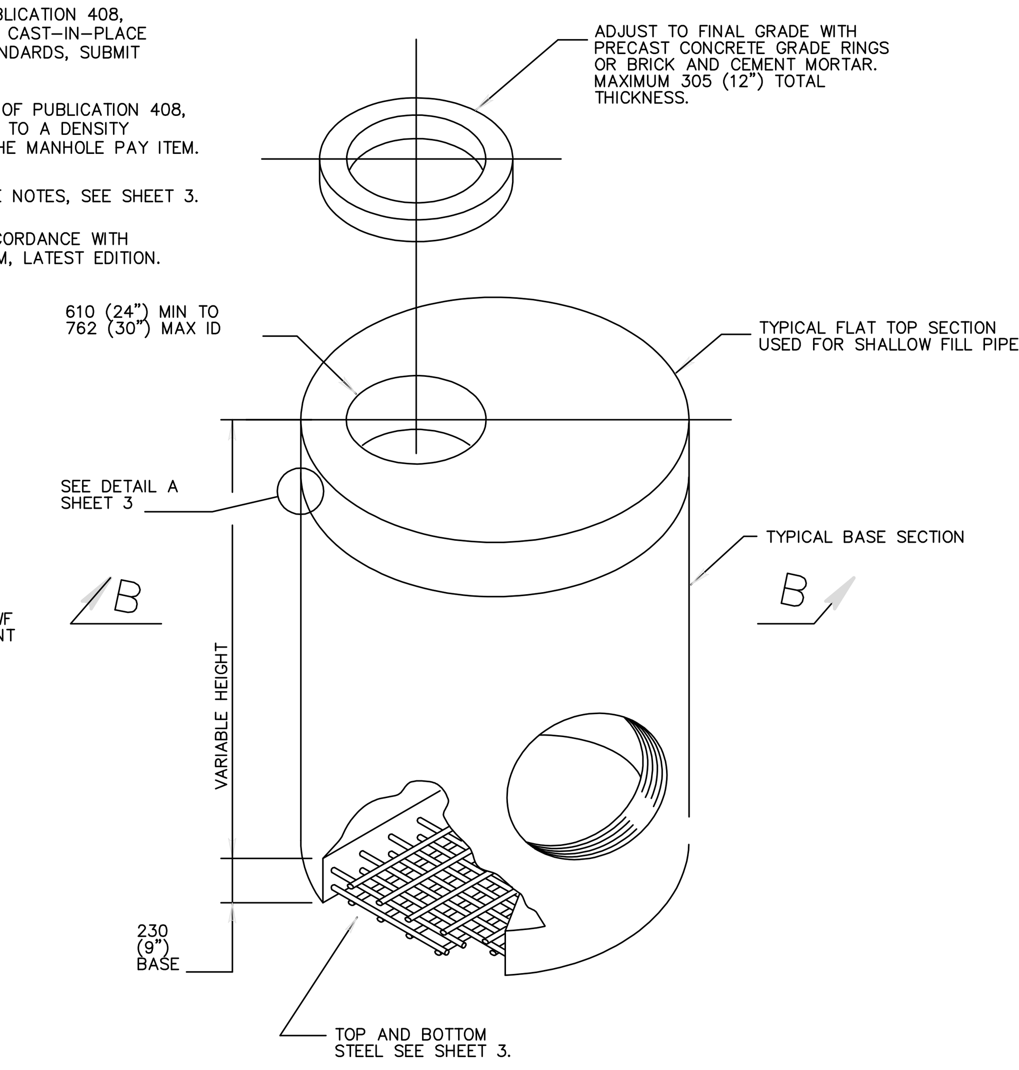

PRECAST MANHOLE
WITH FLAT TOP

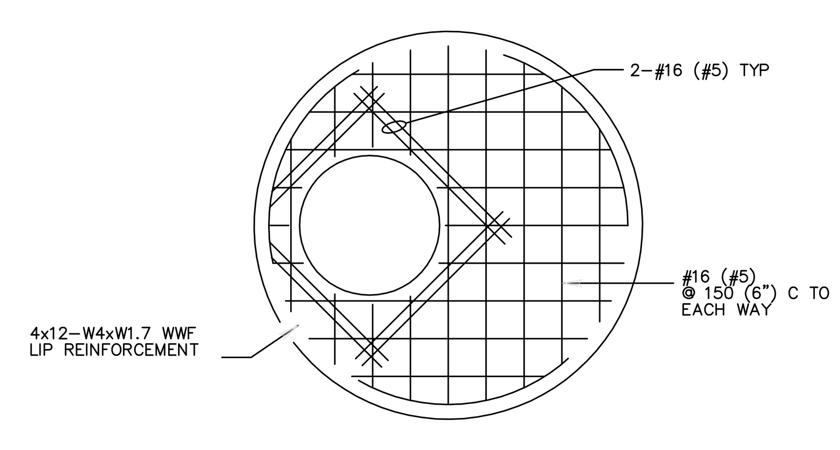

STORM SEWER MANHOLE DETAIL
No Scale

*CORNER CONFIGURATION DETAILS ARE FABRICATOR'S RESPONSIBILITY AND SHALL BE APPROVED.

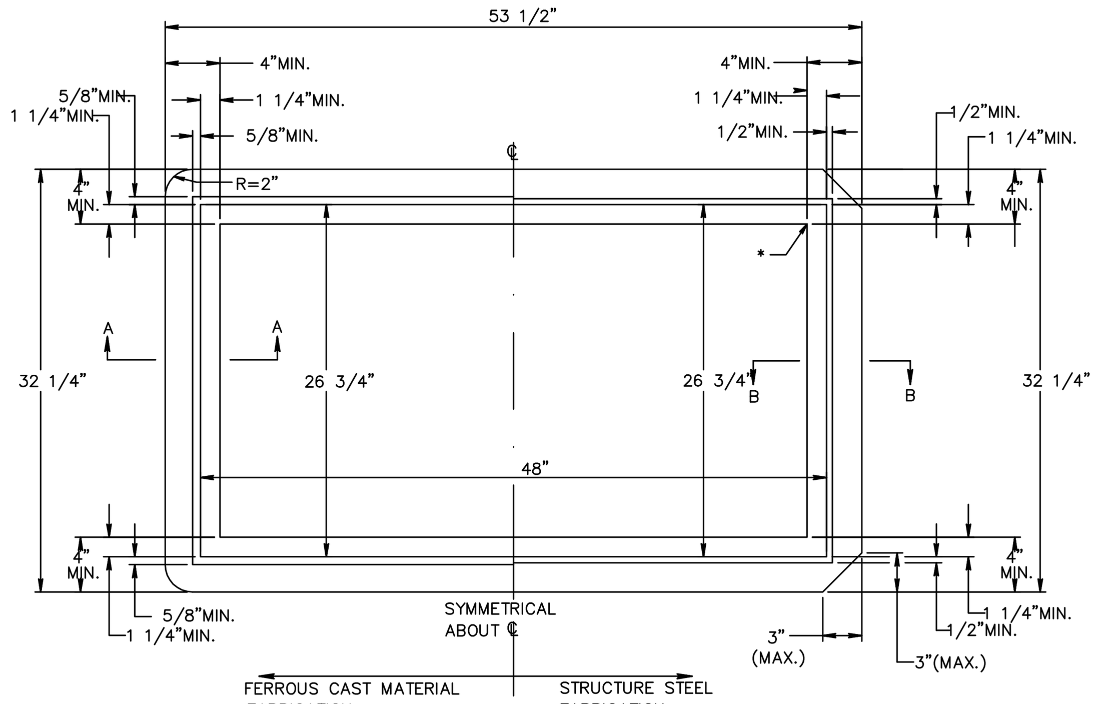

TYPE M FRAME

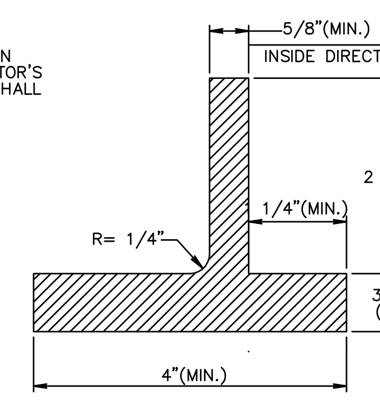

SECTION A–A

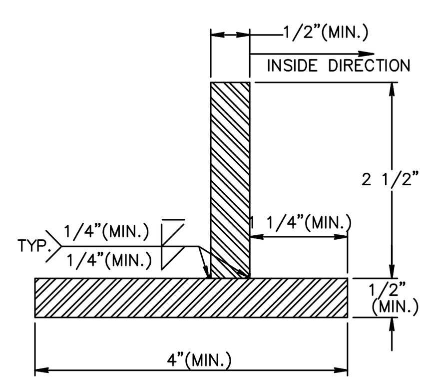

SECTION B–B

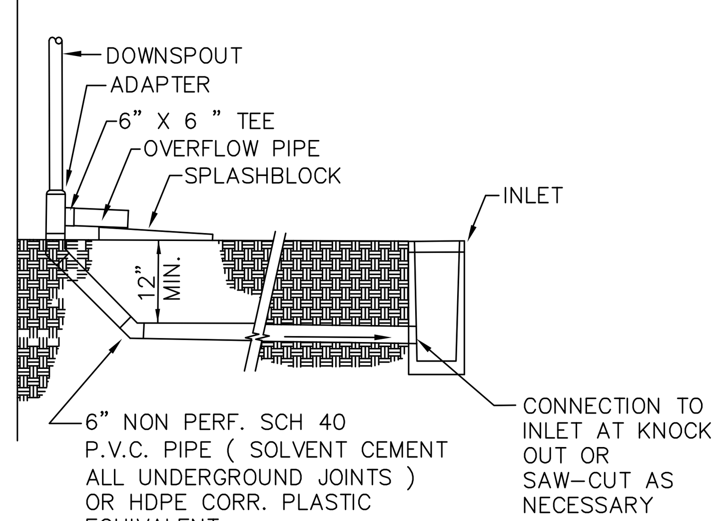

ROOF DRAIN
NOT TO SCALE

NOTES

1. THIS SHEET DEPICTS THE DIMENSIONS REQUIRED FOR UNIFORMITY AND INTERCHANGEABILITY. IT DOES NOT INCLUDE DETAILS REQUIRED FOR FABRICATION OR MANUFACTURING. ONLY FRAMES SUPPLIED BY A MANUFACTURER LISTED IN BULLETIN 15 SHALL BE PERMITTED. FOR A BULLETIN 15 LISTING, SUBMIT A 22" x 36" REPRODUCIBLE SHOP DRAWING TO THE MATERIALS AND TESTING DIVISION, BUREAU OF CONSTRUCTION AND MATERIALS FOR REVIEW AND APPROVAL.
2. PROVIDE EITHER GRAY, MALLEABLE OR DUCTILE IRON CASTINGS OR STRUCTURAL STEEL FRAMES.
3. WELD STRUCTURAL STEEL GRATES IN ACCORDANCE WITH THE REQUIREMENTS OF PUBLICATION 408, SECTION 1105.03(R).

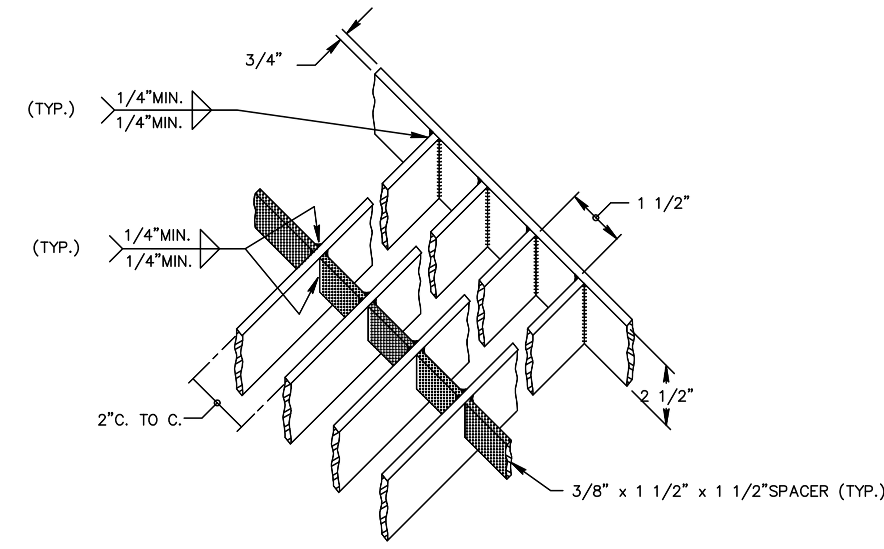

GRATE SPACER DETAIL

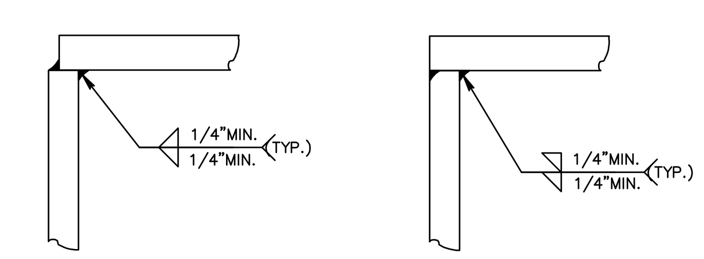

TYPICAL CORNER DETAILS

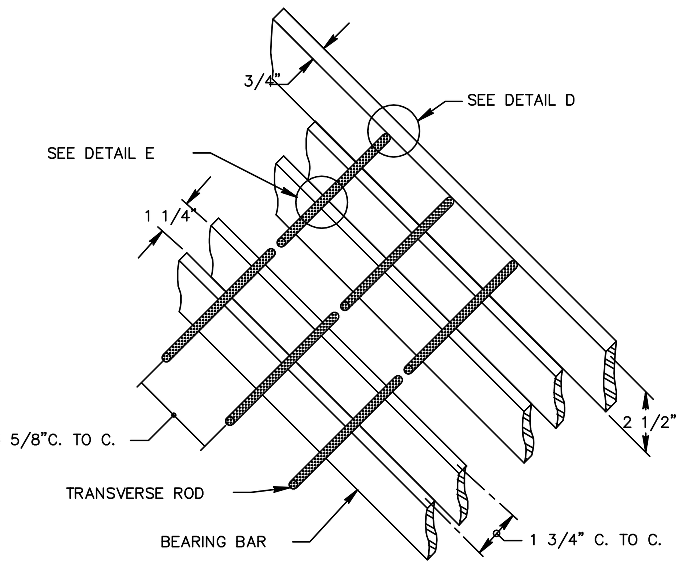

BAR & ROD SPACING DETAIL

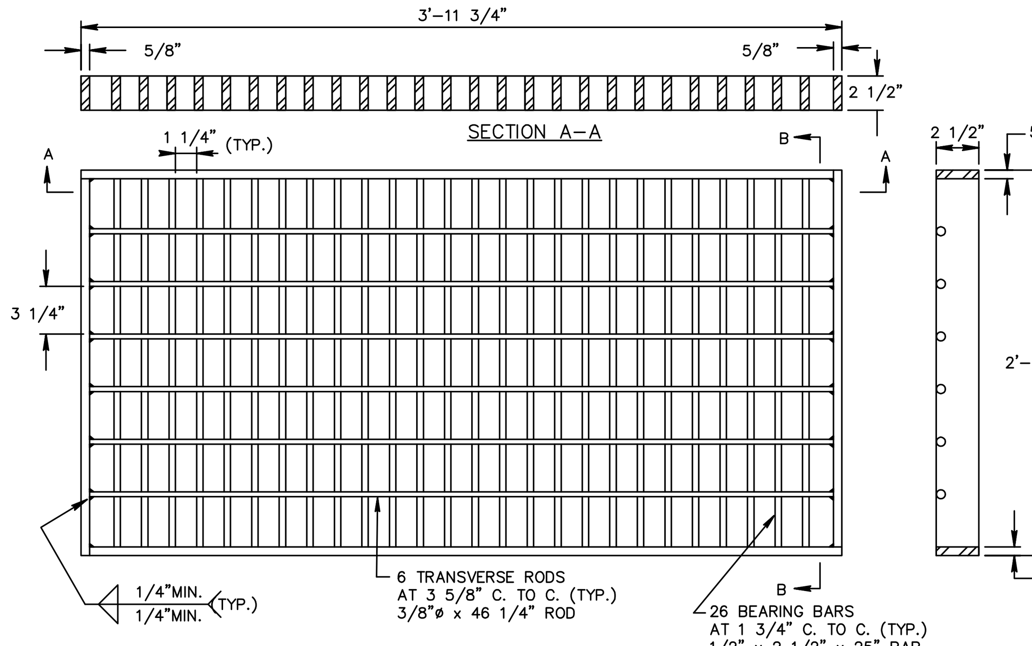

STRUCTURAL STEEL GRATE
BICYCLE SAFE

NOTES

1. THIS SHEET DEPICTS THE DIMENSIONS REQUIRED FOR UNIFORMITY AND INTERCHANGEABILITY. IT DOES NOT INCLUDE DETAILS REQUIRED FOR FABRICATION OR MANUFACTURING. ONLY GRATES SUPPLIED BY A MANUFACTURER LISTED IN BULLETIN 15 SHALL BE PERMITTED. FOR A BULLETIN 15 LISTING, SUBMIT A 22" x 36" REPRODUCIBLE SHOP DRAWING TO THE BUREAU OF CONSTRUCTION AND MATERIALS, MATERIALS AND TESTING DIVISION FOR REVIEW AND APPROVAL.
2. WELD STRUCTURAL STEEL GRATES IN ACCORDANCE WITH THE REQUIREMENTS OF PUBLICATION 408, SECTION 1105.03(R).
3. PROVIDE TRANSVERSE BARS, MEETING THE REQUIREMENTS OF PUB.408.
4. PROVIDE BICYCLE–SAFE, STRUCTURAL STEEL OR CAST IRON VANE GRATES FOR INSTALLATION ONLY WHERE BICYCLE TRAFFIC IS ANTICIPATED, SUCH AS CURBED ROADWAYS IN URBAN AREAS OR ROADWAYS SPECIFICALLY ESTABLISHED AND SIGNED AS BIKEWAYS OR HAVING BIKE LANES. ALTERNATE BICYCLE–SAFE GRATE DESIGNS SHALL REQUIRE A SHOP DRAWING SUBMISSION, AS SPECIFIED IN NOTE 1, AND SHALL CONFORM TO THE DIMENSIONAL REQUIREMENTS FOR PROPER INSTALLATION WITH THE CURRENT CONCRETE TOP UNITS.
5. FABRICATE SLOTS BY BURNING, DRILLING, SHEARING OR PUNCHING. HAVE THE BOTTOM OF ALL BURNED OR DRILLED SLOTS CONFORM TO THE SHAPE OF THE ROD.
6. PROVIDE STRUCTURAL STEEL GRATES WITH THE GRATE SPACERS LOCATED FLUSH ALONG THE TOP SURFACE OF THE GRATE.
7. DO NOT USE CAST IRON GRATES WITHIN THE TRAVEL LANES. THESE GRATES ARE PERMITTED AT THE EDGE OF OUTSIDE SHOULDERS, SWALES, WIDE MEDIAN SWALES AND INFIELD AREAS THAT ARE OUTSIDE THE TRAVEL LANES OR CURB TO CURB ROADWAYS.

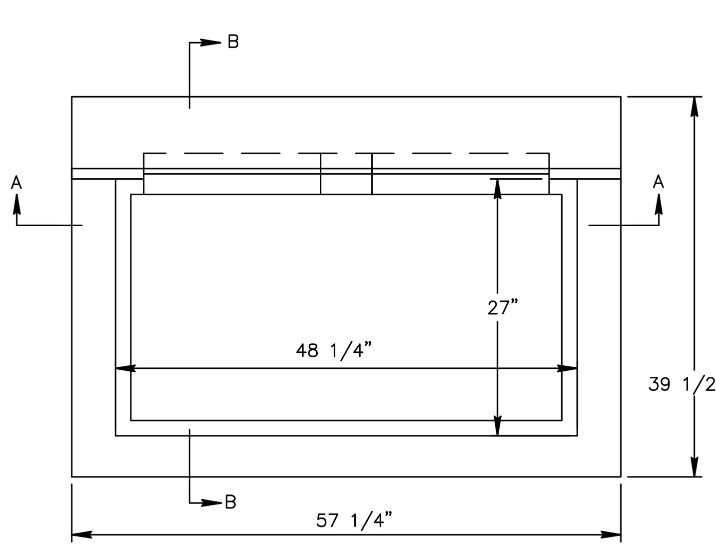

PLAN VIEW

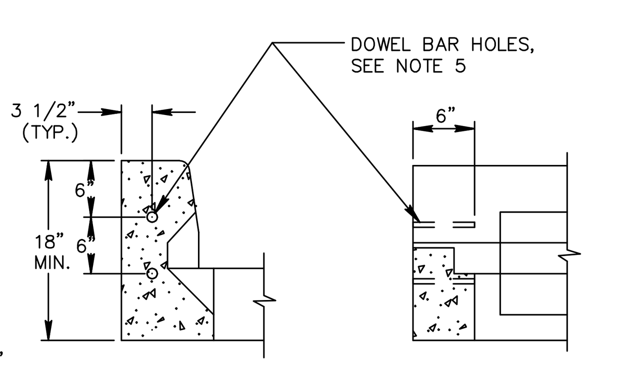

SIDE VIEW

FRONT ELEVATION VIEW

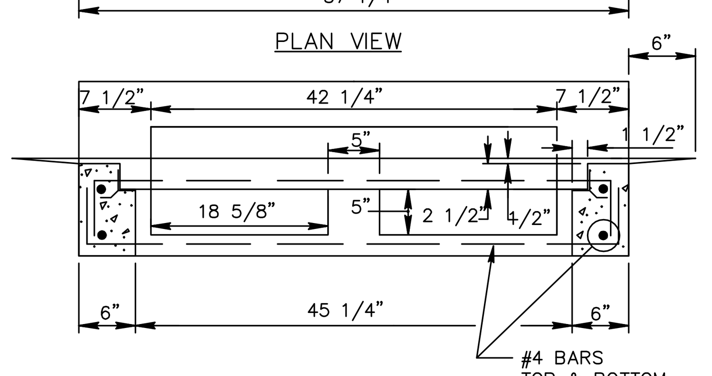

SECTION A–A

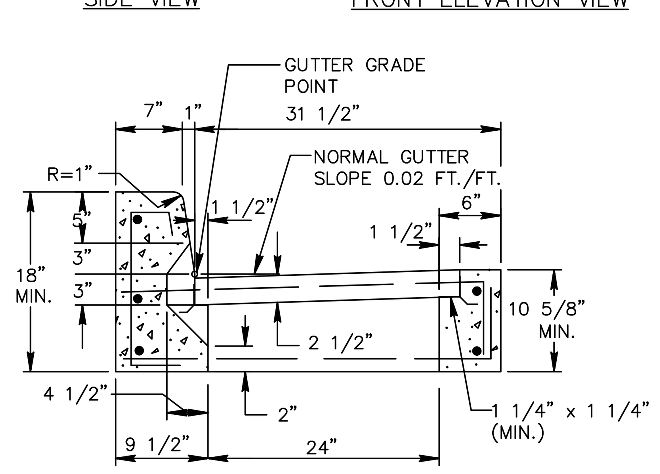

SECTION B–B

TYPE C FRAME

NOTES

1. THIS SHEET DEPICTS THE SHAPE AND DIMENSIONS REQUIRED FOR UNIFORMITY AND COMPATIBILITY. IT DOES NOT INCLUDE DETAILS REQUIRED FOR MANUFACTURING AND HANDLING PRECAST TOP UNITS. ONLY TOP UNITS SUPPLIED BY A MANUFACTURER LISTED IN BULLETIN 15 SHALL BE PERMITTED. FOR A BULLETIN 15 LISTING, SUBMIT A 22" x 36" REPRODUCIBLE SHOP DRAWING TO THE BUREAU OF CONSTRUCTION AND MATERIALS, MATERIALS AND TESTING DIVISION FOR REVIEW AND APPROVAL.
2. CAST–IN–PLACE TOP UNITS MAY BE MONOLITHIC WITH THE INLET BOX.
3. PROVIDE ANGLES EMBEDDED IN THE CONCRETE AS A BEARING AREA FOR THE GRATE FOR ALL TOP UNITS WHICH SEAT THE GRATE DIRECTLY WITHIN THE UNIT.
4. PLACE A TYPE M INLET ADJACENT TO THE BACK EDGE OF THE CURB, FLUSH WITH THE PAVEMENT SURFACE, WHEN REQUIRED WITHIN A CONCRETE MOUNTABLE CURB SECTION.
5. DOWEL TYPE C INLET TOP UNITS WITH 2–#8 x 1'–0" DOWEL BARS AND PLACE 1/4" PREMOLDED EXPANSION JOINT FILLER WHEN CONNECTING TO ADJACENT CURB SECTIONS.
6. THE PLACEMENT OF THE TYPE S INLET RELATIVE TO THE GUTTER INVERT IS DEPENDENT ON THE RATE OF BACK SLOPE. FOR BACK SLOPES GREATER THAN 2:1, LOCATE THE INLET WHERE THE BACK SLOPE LINE INTERSECTS THE BACK, TOP, OUTSIDE CORNER OF THE INLET. FOR BACK SLOPES LESS THAN 2:1, LOCATE THE INLET WHERE THE BACK SLOPE LINE INTERSECTS THE EDGE OF THE INLET GRATE.

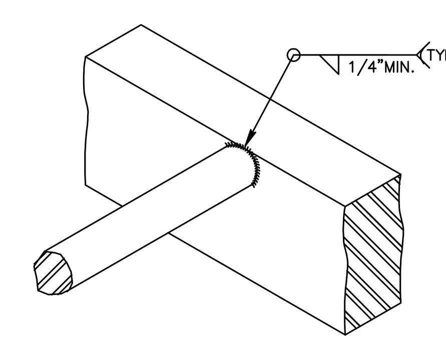

DETAIL D

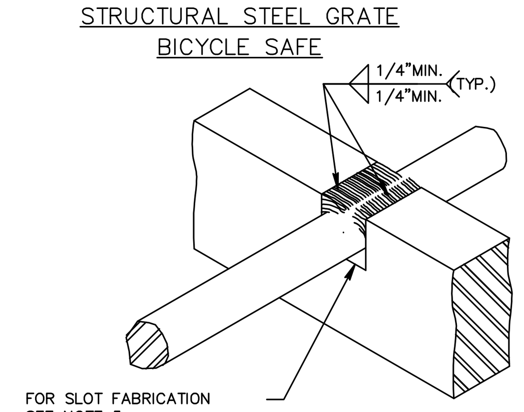

FOR SLOT FABRICATION SEE NOTE 5

DETAIL E

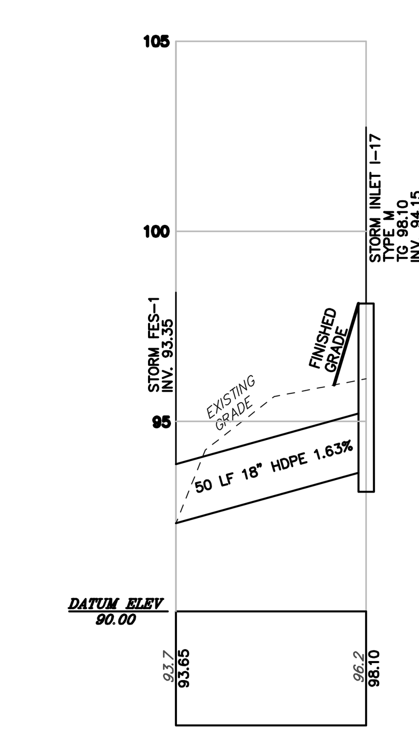

STORM SEWER
PROFILE
INLET FES-1 TO INLET I-17
HORIZONAL SCALE: 1"=40'
VERTICAL SCALE: 1"=4'

SERIAL NO. 2016–2450730
CALL BEFORE YOU DIG!
PENNSYLVANIA LAW REQUIRES 3 WORKING DAYS NOTICE FOR CONSTRUCTION PHASE AND 10 WORKING DAYS IN DESIGN STAGE–STOP CALL
PENNSYLVANIA ONE CALL SYSTEM, INC.
1–800–242–1776

INFORMATION SHOWN ON THIS PLAN IS THE RESULT OF A PROFESSIONAL SERVICE RENDERED BY AND IS OWNED BY DUMACK ENGINEERING. REPRODUCTION OF THIS PLAN WITHOUT APPROVAL OF DUMACK ENGINEERING IS NOT PERMITTED. THE REPRODUCTION OF A COPY OF THIS PLAN FOR THE PURPOSE OF CREATING ADDITIONAL COPIES OR REVISING SAID PLAN SHALL, IN NO CIRCUMSTANCE, BE APPROVED. VIOLATION OF THIS RESTRICTION SHALL BE CONSIDERED A VIOLATION OF BOTH THE PROFESSIONAL CODE OF ETHICS AND A THEFT OF CORPORATE ASSETS, BOTH OF WHICH SHALL BE PROSECUTED TO THE FULLEST EXTENT OF CURRENT STATUTES.
THIS PLAN HAS BEEN SPECIFICALLY PREPARED FOR THE OWNER DESIGNATED HEREON, ANY MODIFICATION, REVISION, DUPLICATION OR USE WITHOUT THE WRITTEN CONSENT OF DUMACK ENGINEERING IS PROHIBITED. RELIANCE ON THIS PLAN FOR ANY PURPOSE OTHER THAN THAT WHICH IT IS INTENDED SHALL BE AT THE SOLE DISCRETION AND LIABILITY OF THE APPLICABLE PARTY.

THIS PROJECT HAS BEEN PREPARED FOR MUNICIPAL PURPOSES. ADDITIONAL INFORMATION MAY BE REQUIRED FOR CONSTRUCTION.

ALL DIMENSIONS MUST BE VERIFIED BY CONTRACTOR AND OWNER MUST BE NOTIFIED OF ANY DISCREPANCIES BEFORE PROCEEDING WITH THE WORK.

©– 2013, DUMACK ENGINEERING – ALL RIGHTS RESERVED

NOT VALID WITHOUT AN EMBOSSED SEAL OR SIGNATURE IN RED INK.

COMMONWEALTH OF PENNSYLVANIA — REGISTERED PROFESSIONAL — HEATH ALAN DUMACK — ENGINEER — PE–051685–E

HEATH A. DUMACK, P.E. & P.L.S.
PA P.E. LICENSE No. PE–051685–E
PA P.L.S. LICENSE No. SU–054500–E

DUMACK ENGINEERING
A PROFESSIONAL CORPORATION
ESTABLISHED IN 1964
CIVIL - STRUCTURAL ENGINEERS & SURVEYORS

PENNS PARK OFFICE
677 DURHAM ROAD
P.O. BOX 487
PENNS PARK, PA 18943
PHONE: (215) 598-1230
FAX: (215) 598-1232

ROYERSFORD OFFICE
P.O. BOX 809
ROYERSFORD, PA 19468
PHONE:(610) 489-9449
FAX: (610) 489-9449

www.Dumack.com

REV No.	DATE	REVISION
1		
2		
3		
4		
5		
6		
7		
8		
9		
10		
11		
12		
13		
14		
15		
16		
17		
18		
19		
20		

PRELIMINARY AS FINAL
NOT FOR RECORDING

EXISTING PARCEL INFO:
T.M.P. No. 02–036–008
DEED BOOK: 2587 PAGE No. 1053
CURRENT ZONING: R–A–1

OWNER of RECORD:
SAMARPAN HINDU TEMPLE
2746 MECHANICSVILLE ROAD
BENSALEM, PA 19020

APPLICANT:
SAME AS ABOVE

0
GRAPHIC SCALE

CONSTRUCTION DETAILS
2746 MECHANICSVILLE ROAD

BENSALEM TOWNSHIP
BUCKS COUNTY, PA

DRAWN BY: A.E.Y.	CHECKED BY: H.A.D.
SCALE: N.T.S.	PROJECT No: 5447
PLAN DATE: OCT. 5, 2016	SHEET No. 16 OF 17

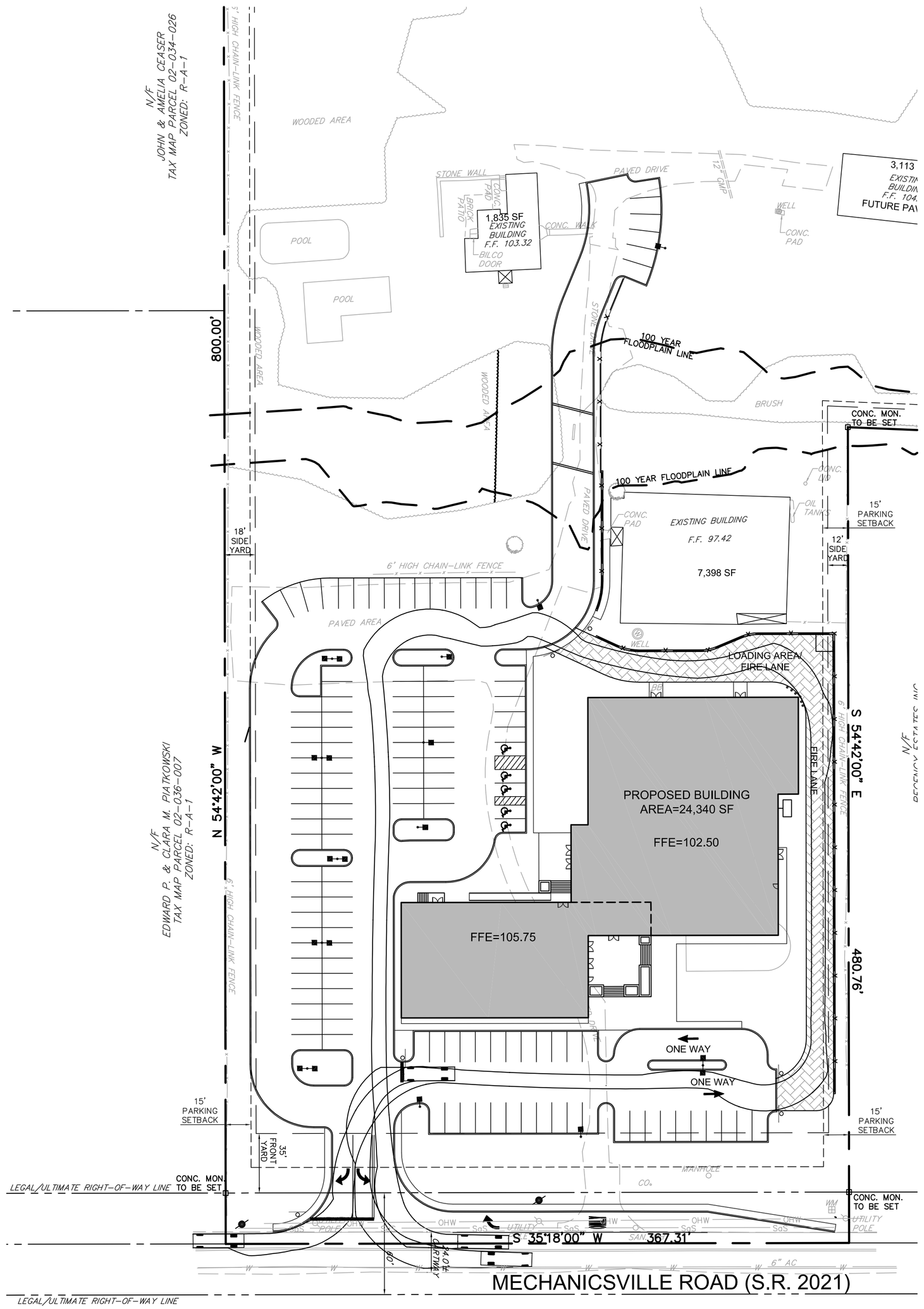

RIGHT TURN IN AND RIGHT TURN OUT
TRUCK TURNING MANEUVER

SCALE :1"=40'

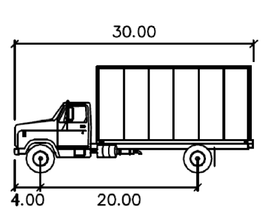

SU	feet
Width	: 8.00
Track	: 8.00
Lock to Lock Time	: 6.00
Steering Angle	: 31.80

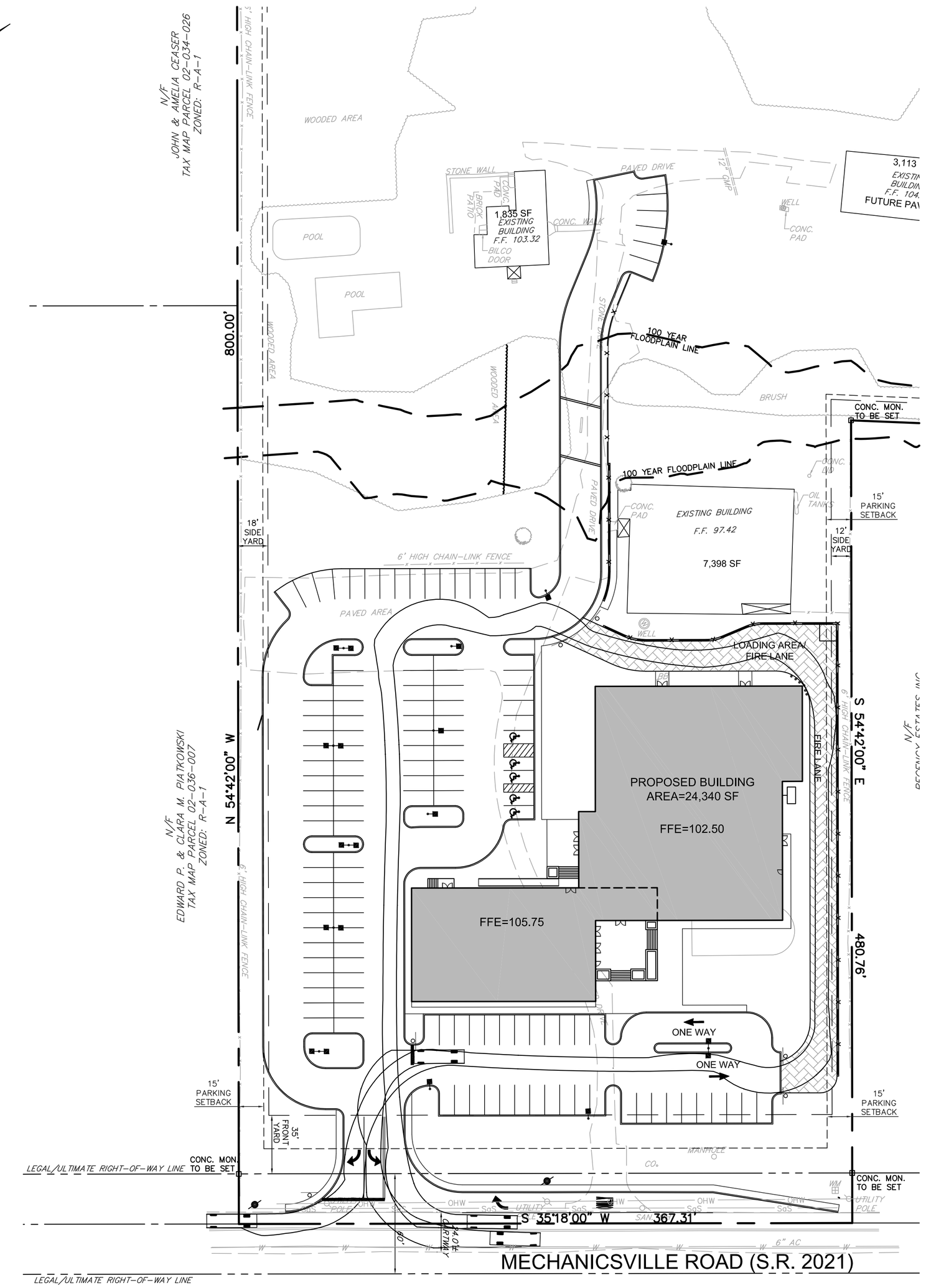

LEFT TURN IN AND LEFT TURN OUT
TRUCK TURNING MANEUVER

SCALE :1"=40'

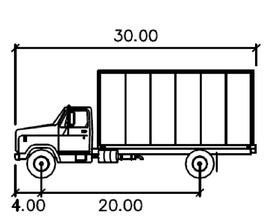

SU	feet
Width	: 8.00
Track	: 8.00
Lock to Lock Time	: 6.00
Steering Angle	: 31.80

SERIAL NO. 2016-2450730

CALL BEFORE YOU DIG!

PENNSYLVANIA LAW REQUIRES 3 WORKING DAYS NOTICE FOR CONSTRUCTION PHASE AND 10 WORKING DAYS IN DESIGN STAGE-STOP CALL

PENNSYLVANIA ONE CALL SYSTEM, INC.

1-800-242-1776

INFORMATION SHOWN ON THIS PLAN IS THE RESULT OF A PROFESSIONAL SERVICE RENDERED BY AND IS OWNED BY DUMACK ENGINEERING. ANY USE OF THIS PLAN WITHOUT APPROVAL OF DUMACK ENGINEERING IS NOT PERMITTED. ANYONE MAKING UNAUTHORIZED USE OF THIS PLAN BY REASON OF CREATING ADDITIONAL COPIES OR REVISING SAID PLAN SHALL BE PROSECUTED TO THE FULLEST EXTENT OF THE LAW. BY THIS RESTRICTION SHALL BE CONSIDERED A VIOLATION OF BOTH COPYRIGHT AND PROFESSIONAL ETHICS, AND ALL OFFENDERS SHALL BE PROSECUTED TO THE FULLEST EXTENT OF THE LAW. BY THIS RESTRICTION SHALL BE CONSIDERED A VIOLATION OF BOTH CORPORATE ASSETS, BOTH OF WHICH SHALL BE PROSECUTED TO THE FULLEST EXTENT OF THE LAW.
THIS PLAN HAS BEEN SPECIFICALLY PREPARED FOR THE OWNER DESIGNATED HEREON AND IS NOT TRANSFERABLE TO ANY OTHER OR USE WITHOUT THE WRITTEN CONSENT OF DUMACK ENGINEERING. DUMACK ENGINEERING SHALL NOT BE LIABLE FOR ANY PURPOSE OTHER THAN THAT WHICH IT IS INTENDED SHALL BE PARTY, SOLE DISCRETION AND LIABILITY OF THE APPLICABLE PARTY.
THIS PROJECT HAS BEEN PREPARED FOR MUNICIPAL PURPOSES. ADDITIONAL INFORMATION MAY BE REQUIRED FOR CONSTRUCTION.
ALL UTILITIES SHOWN ON THIS PLAN ARE APPROXIMATE. THE OWNER MUST BE NOTIFIED OF ANY DISCREPANCIES BEFORE PROCEEDING WITH THE WORK.
© - 2013, DUMACK ENGINEERING - ALL RIGHTS RESERVED

NOT VALID WITHOUT AN EMBOSSED SEAL OR SIGNATURE IN RED INK.

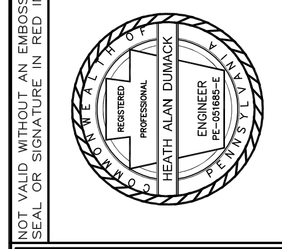

HEATH A. DUMACK, P.E. & P.L.S.
PA P.E. LICENSE No. PE-064644-E
PA P.L.S. LICENSE No. SU-054500-E

DUMACK ENGINEERING
ESTABLISHED IN 1964
A PROFESSIONAL CORPORATION
CIVIL - STRUCTURAL ENGINEERS & SURVEYORS

PENNS PARK OFFICE
677 DURHAM ROAD
P.O. BOX 487
PENNS PARK, PA 18943
PHONE: (215) 598-1230
FAX: (215) 598-1232

ROYERSFORD OFFICE
P.O. BOX 809
ROYERSFORD, PA 19468
PHONE: (610) 489-9440
FAX: (610) 489-9449

www.Dumack.com

REV. No.	DATE	REVISION
1		
2		
3		
4		
5		
6		
7		
8		
9		
10		
11		
12		
13		
14		
15		
16		
17		
18		
19		
20		

PRELIMINARY AS FINAL
NOT FOR RECORDING

EXISTING PARCEL INFO:
T.M.P. No. 02-036-008
DEED BOOK: 2587 PAGE No. 1053
CURRENT ZONING: R-A-1

OWNER of RECORD:
SAMARPAN HINDU TEMPLE
2746 MECHANICSVILLE ROAD
BENSALEM, PA 19020

APPLICANT:
SAME AS ABOVE

40 0 20 40
GRAPHIC SCALE

TRUCK TURNING PLAN
2746 MECHANICSVILLE ROAD

BENSALEM TOWNSHIP
BUCKS COUNTY, PA

DRAWN BY:	CHECKED BY:
A.E.Y.	H.A.D.
SCALE: N.T.S.	PROJECT No: 5447
PLAN DATE: OCT. 5, 2016	SHEET No: 17 OF 17

DUMACK ENGINEERING

CIVIL - STRUCTURAL ENGINEERS
& SURVEYORS

P.O. Box 487 Penns Park, PA 18943
(215) 598-1230 Fax: (215) 598-1232

STORMWATER MANAGEMENT REPORT

FOR

2746 MECHANICSVILLE ROAD

BENSALEM TOWNSHIP, BUCKS COUNTY

OCTOBER 3, 2016

DUMACK PROJECT #5447

TABLE OF CONTENTS

SITE NARRATIVE	PAGE 1
SITE LOCATION MAP	PAGE 2
NRCS SOILS BOUNDARY MAP	PAGE 3
RUNOFF SUMMARY	PAGE 6
BRIDGE CULVERT DESIGN	PAGE 7
1 YEAR PRE & POST DEVELOPMENT HYDROGRAPHS	PAGE 8
2 YEAR PRE & POST DEVELOPMENT HYDROGRAPHS	PAGE 21
5 YEAR PRE & POST DEVELOPMENT HYDROGRAPHS	PAGE 32
10 YEAR PRE & POST DEVELOPMENT HYDROGRAPHS	PAGE 43
25 YEAR PRE & POST DEVELOPMENT HYDROGRAPHS	PAGE 54
50 YEAR PRE & POST DEVELOPMENT HYDROGRAPHS	PAGE 65
100 YEAR PRE & POST DEVELOPMENT HYDROGRAPHS	PAGE 76
STORMWATER CONVEYANCE CALCULATION SYSTEM #1	PAGE 87
STORMWATER CONVEYANCE CALCULATION SYSTEM #2	PAGE 90
STORMWATER CONVEYANCE CALCULATION SYSTEM #3	PAGE 93

APPENDIX:

PREDEVELOPMENT DRAINAGE AREA BOUNDARY MAP

POSTDEVELOPMENT DRAINAGE AREA BOUNDARY MAP

INLET DRAINAGE AREA BOUNDARY MAP

NARRATIVE

This site is located approximately 450± feet northeast of the intersection of Salem Drive and Mechanicsville Road in Bensalem Township. It consists of one lot, with a total area of 7.85 acres. The past (50 years), present (5 years) the site has primarily been a recreational facility with pools and a clubhouse. The site slopes towards a stream within the property and ultimately discharges to the Poquessing Creek. Onsite soils consist of Doylestown Silt Loam (DdA) and Urban Land – Chester Complex (UkB) as mapped by the NRCS. The site is located within the Delaware River South Watershed and site runoff is tributary to the Poquessing Creek with Chapter 93 designation of Warm Water Fishes (WWF) and Migratory Fishes (MF). There are no known geological conditions that might pose a significant pollution hazard. The proposed site improvements include the construction of a 24,340 S.F. proposed worship facility and associated parking along with one underground basin for stormwater management purposes.

The storm water management facility has been designed in accordance with the design standards of the Bensalem Township Stormwater Management Ordinance which was adopted 5/28/2015. The Post Development stormwater management system has been designed to reduce peak flows to less than Predevelopment levels of each storm event, to provide the required volume of structural BMP's, and to negate some of the increase in stormwater volumes during the 2-year design storm. The PCSM design preserves the integrity of stream channels and protects the physical, biological, and chemical qualities of the receiving stream. The PCSM design minimizes any increase in stormwater runoff volume. The PCSM design minimizes impervious surfaces. The PCSM design maximizes the protection of existing drainage features and existing vegetation. The PCSM design minimizes land clearing and grading. The PCSM design minimizes soil compaction. The PCSM design does not utilize other structural or nonstructural BMP's that prevent or minimize changes in stormwater runoff. The stormwater management system discharge does not impact but improve the downstream and off-site areas. The enclosed stormwater management calculations are based on the Rational Method as allowed by the Ordinance for projects of this size. The dimensions and elevations utilized in this report are consistent with the PCSM plan.

The enclosed stormwater calculations are based on providing stormwater management for the "site area". This area consists of the watershed Pre-1 in the predevelopment condition. In the postdevelopment condition the areas are labeled as Trib-1 being the area of the site tributary to the Drywell. Additionally, By-1 is the area that bypasses the drywell. There is no off-site area that enters into the proposed drywell. In the predevelopment condition cover conditions are set to meadow and 20% of the impervious coverage is considered to be meadow per the Ordinance. In the postdevelopment conditions, the cover conditions are set to either open space, lawn, meadow, or impervious surface.

The proposed stormwater management system consists of a one proposed underground basin and native landscaping. The basin, as proposed, is designed to discharge to the receiving on-site stream in all storm events. All captured runoff during noted storms will be infiltrated over the significant footprint of the basin. The proposed stormwater conveyance system has been designed to capture, and route stormwater to the proposed underground basin. For the purposes of this design an infiltration rate of 0.25"/hr has been used as a conservative infiltration rate. No percolation tests have been performed on-site. In the event a storm more intense than the 100-year storm occurs, the inlets located within the basin will act as an emergency spillway.

The proposed culvert has been designed to handle the capacity of the existing on-site stream in the 100-year storm event. The calculations for the proposed culvert are attached within this report.

This stormwater report was prepared by Heath Dumack, P.E. & P.L.S. Mr Dumack has over 26 years of experience in the design of stormwater controls in southeast Pennsylvania and numerous surrounding states.

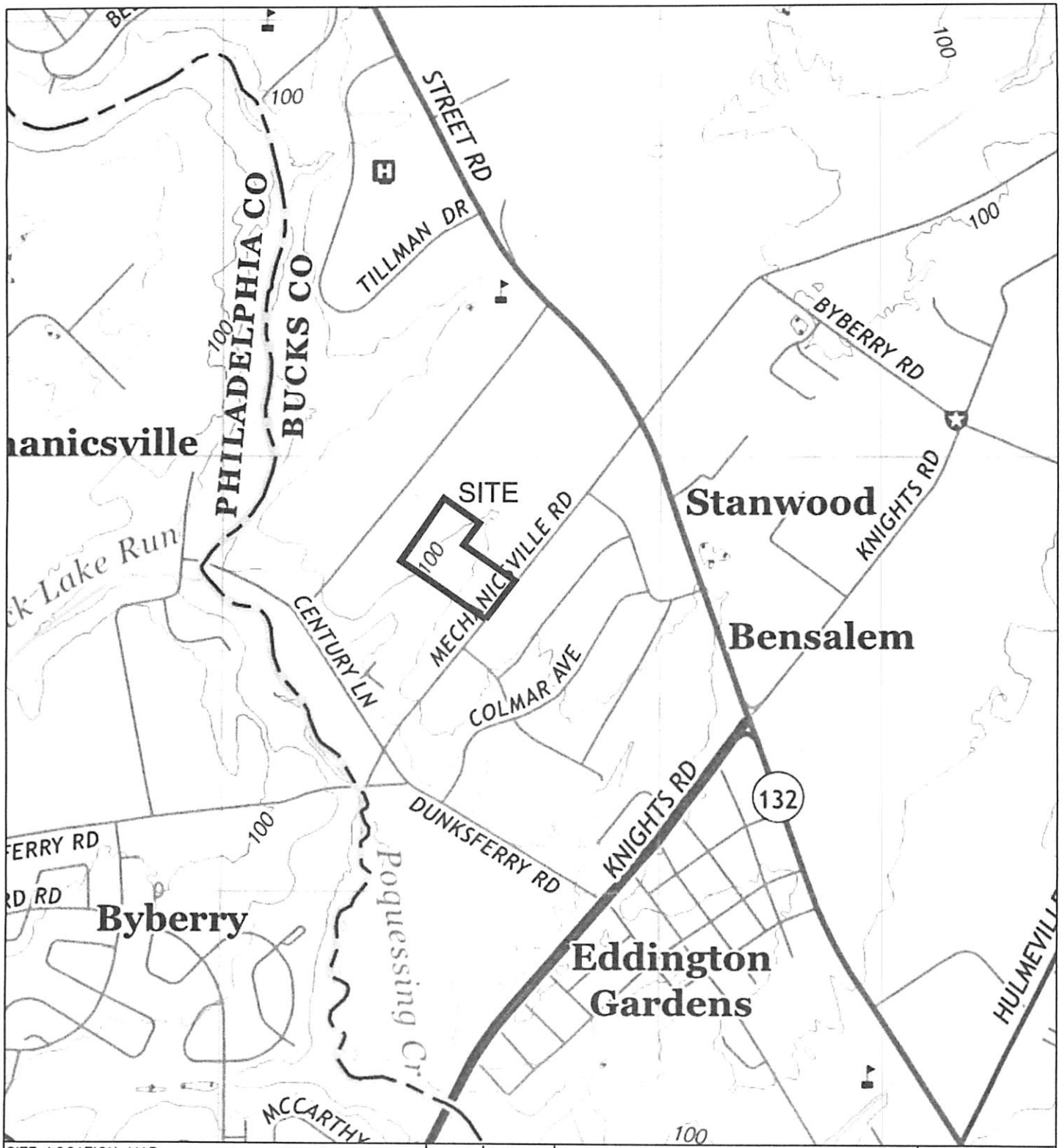

SITE LOCATION MAP
(BEVERLY NJ–PA U.S.G.S. QUAD MAP)
2746 MECHANICSVILLE ROAD

BENSALEM TOWNSHIP BUCKS COUNTY

PLAN DATE:	REVISION #	REVISED	REVISION
9/30/16			
JOB #			
5447			
SCALE:			
1" = 1,000'			

1,000 0 500 1,000

DUMACK ENGINEERING
ESTABLISHED IN 1964
877 DURHAM ROAD
P.O. BOX 487
FEASTERVILLE, PA 19053
PHONE: (215) 396-1220
FAX: (215) 396-1222
A PROFESSIONAL CORPORATION
CIVIL - STRUCTURAL ENGINEERS & SURVEYORS
www.Dumack.com

Map Scale: 1:2,310 if printed on A portrait (8.5" x 11") sheet.

N

Meters: 0 30 60 120 180

Feet: 0 100 200 400 600

Map projection: Web Mercator Corner coordinates: WGS84 Edge tics: UTM Zone 18N WGS84

MAP LEGEND

Area of Interest (AOI)
- Area of Interest (AOI)

Soils
- Soil Map Unit Polygons
- Soil Map Unit Lines
- Soil Map Unit Points

Special Point Features
- Blowout
- Borrow Pit
- Clay Spot
- Closed Depression
- Gravel Pit
- Gravelly Spot
- Landfill
- Lava Flow
- Marsh or swamp
- Mine or Quarry
- Miscellaneous Water
- Perennial Water
- Rock Outcrop
- Saline Spot
- Sandy Spot
- Severely Eroded Spot
- Sinkhole
- Slide or Slip
- Sodic Spot
- Spoil Area
- Stony Spot
- Very Stony Spot
- Wet Spot
- Other
- Special Line Features

Water Features
- Streams and Canals

Transportation
- Rails
- Interstate Highways
- US Routes
- Major Roads
- Local Roads

Background
- Aerial Photography

MAP INFORMATION

The soil surveys that comprise your AOI were mapped at 1:24,000.

Warning: Soil Map may not be valid at this scale.

Enlargement of maps beyond the scale of mapping can cause misunderstanding of the detail of mapping and accuracy of soil line placement. The maps do not show the small areas of contrasting soils that could have been shown at a more detailed scale.

Please rely on the bar scale on each map sheet for map measurements.

Source of Map: Natural Resources Conservation Service
Web Soil Survey URL: http://websoilsurvey.nrcs.usda.gov
Coordinate System: Web Mercator (EPSG:3857)

Maps from the Web Soil Survey are based on the Web Mercator projection, which preserves direction and shape but distorts distance and area. A projection that preserves area, such as the Albers equal-area conic projection, should be used if more accurate calculations of distance or area are required.

This product is generated from the USDA-NRCS certified data as of the version date(s) listed below.

Soil Survey Area: Bucks County, Pennsylvania
Survey Area Data: Version 11, Nov 16, 2015

Soil map units are labeled (as space allows) for map scales 1:50,000 or larger.

Date(s) aerial images were photographed: Jun 20, 2014—Jul 5, 2014

The orthophoto or other base map on which the soil lines were compiled and digitized probably differs from the background imagery displayed on these maps. As a result, some minor shifting of map unit boundaries may be evident.

Map Unit Legend

Bucks County, Pennsylvania (PA017)			
Map Unit Symbol	**Map Unit Name**	**Acres in AOI**	**Percent of AOI**
DdA	Doylestown silt loam, 0 to 3 percent slopes	4.9	42.8%
UkB	Urban land-Chester complex, 0 to 8 percent slopes	6.5	57.2%
Totals for Area of Interest		**11.4**	**100.0%**

RUNOFF SUMMARY

FLOW SUMMARY

Predevelopment Condition		Postdevelopment Condition			
STORM INTERVAL	PRE-1 (CFS)	TRIB-1 (CFS)	DRY WELL OUTFLOW (CFS)	BY-1 (CFS)	Total (CFS)
1-Year	**4.28**	2.63	1.96	2.19	**3.86**
2-Year	**5.03**	3.09	2.32	2.58	**4.57**
5-Year	**5.91**	3.63	2.76	3.03	**5.41**
10-Year	**6.67**	4.10	3.13	3.41	**6.13**
25-Year	**7.42**	4.56	3.50	3.80	**6.86**
50-Year	**7.92**	4.87	3.75	4.06	**7.34**
100-Year	**8.43**	5.18	4.01	4.31	**7.82**

VOLUME SUMMARY

STORM INTERVAL	Pre-1 (AF)	TRIB-1 (AF)	DRY WELL OUTFLOW (AF)	BY-1 (AF)	Total (AF)
2-Year	**0.036**	0.022	0.021	0.018	**0.039**

Existing Culvert Pipe											
Size (in)	Material	Area (ft^2)	Length (ft)	Invert Upstream (ft)	Invert Downstream (ft)	Mannings 'n'	Slope (ft/ft)	Hydraulic Radius (ft)	Wetted Perimeter (ft)	Velocity (ft/s)	Flow (cfs)
18	CMP	1.766	20	89.81	88.91	0.012	0.0450	0.375	4.71	13.697	24.193
										TOTAL FLOW FROM CULVERT =	24.193

Proposed Culvert Pipe Design											
Size (in)	Material	Area (ft^2)	Length (ft)	Invert Upstream (ft)	Invert Downstream (ft)	Mannings 'n'	Slope (ft/ft)	Hydraulic Radius (ft)	Wetted Perimeter (ft)	Velocity (ft/s)	Flow (cfs)
60	RCP	1.766	30	89.81	89.30	0.012	0.0170	1.25	15.7	18.786	33.181
60	RCP	1.766	30	89.81	89.30	0.012	0.0170	1.25	15.7	18.786	33.181
										TOTAL FLOW FROM CULVERT =	66.362

Notes:

1. Total Channel Flow was calculated to be 50.72 cfs per a Flood Study performed by Dumack Engineering in April of 2016.
2. Culvert was sized to handle 50.72 cfs (100-year flow) in accordance with the aforementioned Flood Study.

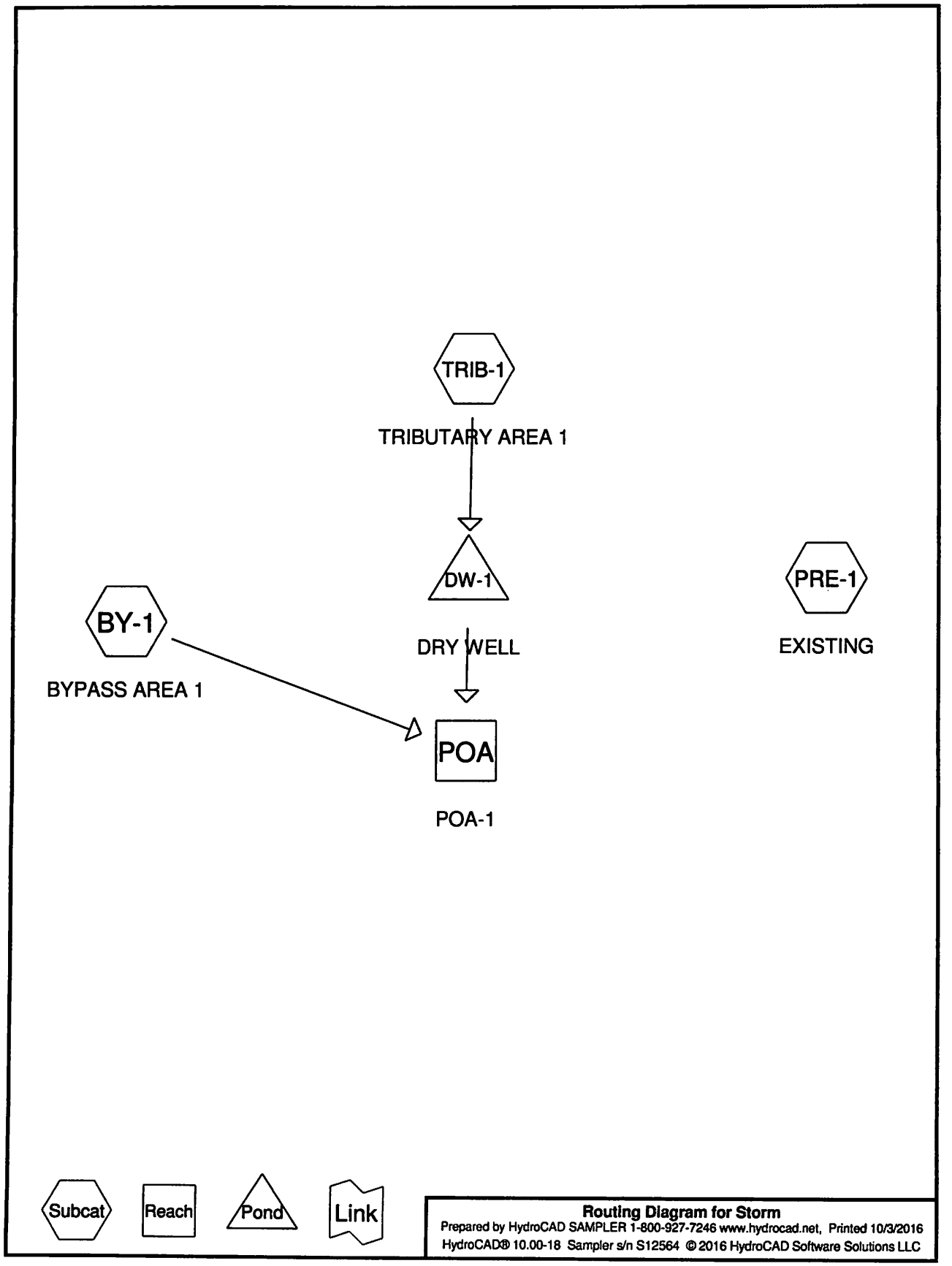
TRIB-1
TRIBUTARY AREA 1
DW-1
DRY WELL
PRE-1
EXISTING
BY-1
BYPASS AREA 1
POA
POA-1
Subcat
Reach
Pond
Link
Routing Diagram for Storm
Prepared by HydroCAD SAMPLER 1-800-927-7246 www.hydrocad.net, Printed 10/3/2016
HydroCAD® 10.00-18 Sampler s/n S12564 © 2016 HydroCAD Software Solutions LLC

This report was prepared with the free HydroCAD SAMPLER, which is licensed for evaluation and educational use ONLY. For actual design or modeling applications you MUST use a full version of HydroCAD which may be purchased at www.hydrocad.net. Full programs also include complete technical support,training materials, and additional features which are essential for actual design work.

Area Listing (all nodes)

Area (acres)	C	Description (subcatchment-numbers)
0.470	0.40	20% Impervious, Meadow Good Condition, HSG D (PRE-1)
5.160	0.96	Impervious (BY-1, PRE-1, TRIB-1)
11.230	0.40	Meadow, Good Condition, HSG D (BY-1, PRE-1)
5.740	0.27	Open Space, Good Condition, HSG D (BY-1, TRIB-1)
22.600	**0.49**	**TOTAL AREA**

This report was prepared with the free HydroCAD SAMPLER, which is licensed for evaluation and educational use ONLY. For actual design or modeling applications you MUST use a full version of HydroCAD which may be purchased at www.hydrocad.net. Full programs also include complete technical support,training materials, and additional features which are essential for actual design work.

Time span=0.00-3.00 hrs, dt=0.01 hrs, 301 points
Runoff by Rational method, Rise/Fall=1.0/1.0 xTc
Reach routing by Stor-Ind+Trans method - Pond routing by Stor-Ind method

Subcatchment BY-1: BYPASS AREA 1 Runoff Area=7.660 ac 9.14% Impervious Runoff Depth=0.02"
Flow Length=865' Tc=25.7 min C=0.37 Runoff=2.19 cfs 0.016 af

Subcatchment PRE-1: EXISTING Runoff Area=11.300 ac 16.64% Impervious Runoff Depth=0.03"
Flow Length=865' Tc=25.7 min C=0.49 Runoff=4.28 cfs 0.030 af

Subcatchment TRIB-1: TRIBUTARY AREA 1 Runoff Area=3.640 ac 70.88% Impervious Runoff Depth=0.06"
Tc=20.9 min C=0.76 Runoff=2.63 cfs 0.019 af

Reach POA: POA-1 Inflow=3.86 cfs 0.033 af
Outflow=3.86 cfs 0.033 af

Pond DW-1: DRY WELL Peak Elev=94.88' Storage=316 cf Inflow=2.63 cfs 0.019 af
Discarded=0.01 cfs 0.001 af Primary=1.95 cfs 0.017 af Outflow=1.96 cfs 0.018 af

Total Runoff Area = 22.600 ac Runoff Volume = 0.065 af Average Runoff Depth = 0.03"
77.17% Pervious = 17.440 ac 22.83% Impervious = 5.160 ac

This report was prepared with the free HydroCAD SAMPLER, which is licensed for evaluation and educational use ONLY. For actual design or modeling applications you MUST use a full version of HydroCAD which may be purchased at www.hydrocad.net. Full programs also include complete technical support,training materials, and additional features which are essential for actual design work.

Summary for Subcatchment BY-1: BYPASS AREA 1

Runoff = 2.19 cfs @ 0.08 hrs, Volume= 0.016 af, Depth= 0.02"

Runoff by Rational method, Rise/Fall=1.0/1.0 xTc, Time Span= 0.00-3.00 hrs, dt= 0.01 hrs
Bensalem 1-Year Duration=5 min, Inten=4.08 in/hr

Area (ac)	C	Description
0.700	0.96	Impervious
2.280	0.40	Meadow, Good Condition, HSG D
4.680	0.27	Open Space, Good Condition, HSG D
7.660	0.37	Weighted Average
6.960		90.86% Pervious Area
0.700		9.14% Impervious Area

Tc (min)	Length (feet)	Slope (ft/ft)	Velocity (ft/sec)	Capacity (cfs)	Description
19.6	150	0.0200	0.13		**Sheet Flow, Sheet Flow** Grass: Dense n= 0.240 P2= 3.26"
1.9	404	0.0500	3.60		**Shallow Concentrated Flow, Shallow Flow** Unpaved Kv= 16.1 fps
4.2	311	0.0240	1.23	396.32	**Channel Flow, Channel Flow** Area= 321.5 sf Perim= 157.9' r= 2.04' n= 0.300
25.7	865	Total			

This report was prepared with the free HydroCAD SAMPLER, which is licensed for evaluation and educational use ONLY. For actual design or modeling applications you MUST use a full version of HydroCAD which may be purchased at www.hydrocad.net. Full programs also include complete technical support,training materials, and additional features which are essential for actual design work.

Subcatchment BY-1: BYPASS AREA 1

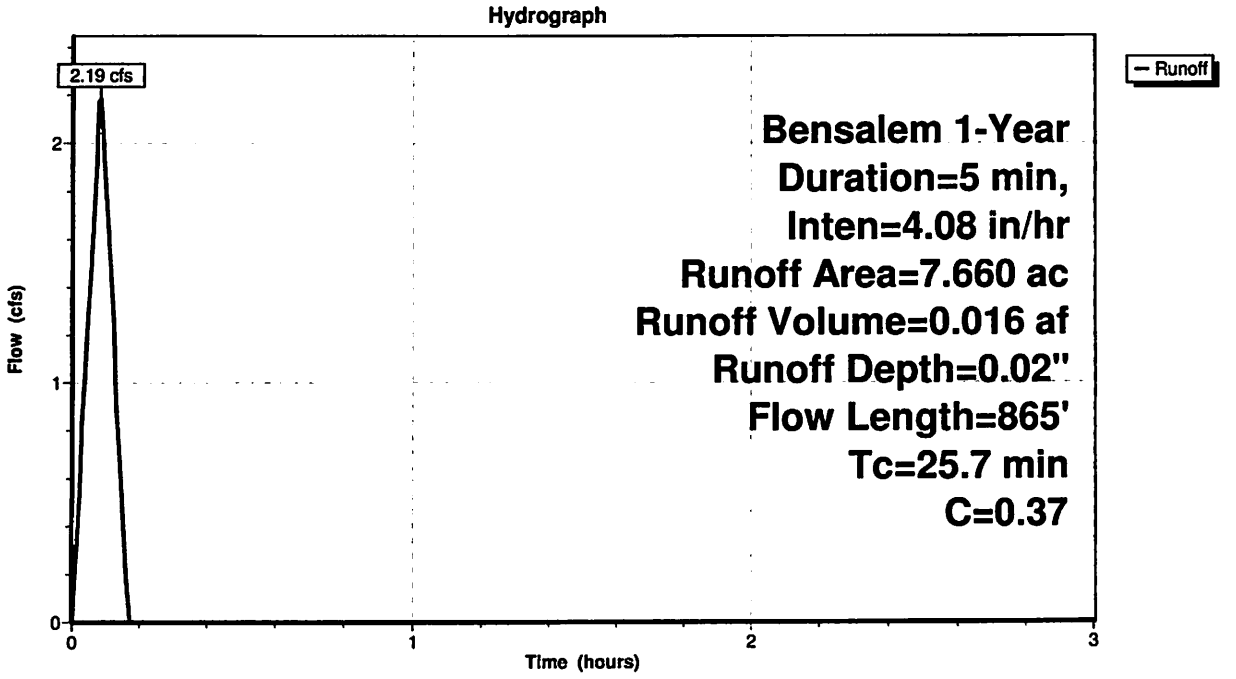

This report was prepared with the free HydroCAD SAMPLER, which is licensed for evaluation and educational use ONLY. For actual design or modeling applications you MUST use a full version of HydroCAD which may be purchased at www.hydrocad.net. Full programs also include complete technical support,training materials, and additional features which are essential for actual design work.

Summary for Subcatchment PRE-1: EXISTING

Runoff = 4.28 cfs @ 0.08 hrs, Volume= 0.030 af, Depth= 0.03"

Runoff by Rational method, Rise/Fall=1.0/1.0 xTc, Time Span= 0.00-3.00 hrs, dt= 0.01 hrs
Bensalem 1-Year Duration=5 min, Inten=4.08 in/hr

Area (ac)	C	Description
1.880	0.96	Impervious
8.950	0.40	Meadow, Good Condition, HSG D
0.470	0.40	20% Impervious, Meadow Good Condition, HSG D
11.300	0.49	Weighted Average
9.420		83.36% Pervious Area
1.880		16.64% Impervious Area

Tc (min)	Length (feet)	Slope (ft/ft)	Velocity (ft/sec)	Capacity (cfs)	Description
19.6	150	0.0200	0.13		**Sheet Flow, Sheet Flow** Grass: Dense n= 0.240 P2= 3.26"
1.2	240	0.0400	3.22		**Shallow Concentrated Flow, Shallow Flow** Unpaved Kv= 16.1 fps
0.1	16	0.0100	2.03		**Shallow Concentrated Flow, Shallow Flow** Paved Kv= 20.3 fps
0.6	148	0.0690	4.23		**Shallow Concentrated Flow, Shallow Flow** Unpaved Kv= 16.1 fps
4.2	311	0.0240	1.23	396.32	**Channel Flow, Channel Flow** Area= 321.5 sf Perim= 157.9' r= 2.04' n= 0.300
25.7	865	Total			

This report was prepared with the free HydroCAD SAMPLER, which is licensed for evaluation and educational use ONLY. For actual design or modeling applications you MUST use a full version of HydroCAD which may be purchased at www.hydrocad.net. Full programs also include complete technical support,training materials, and additional features which are essential for actual design work.

Subcatchment PRE-1: EXISTING

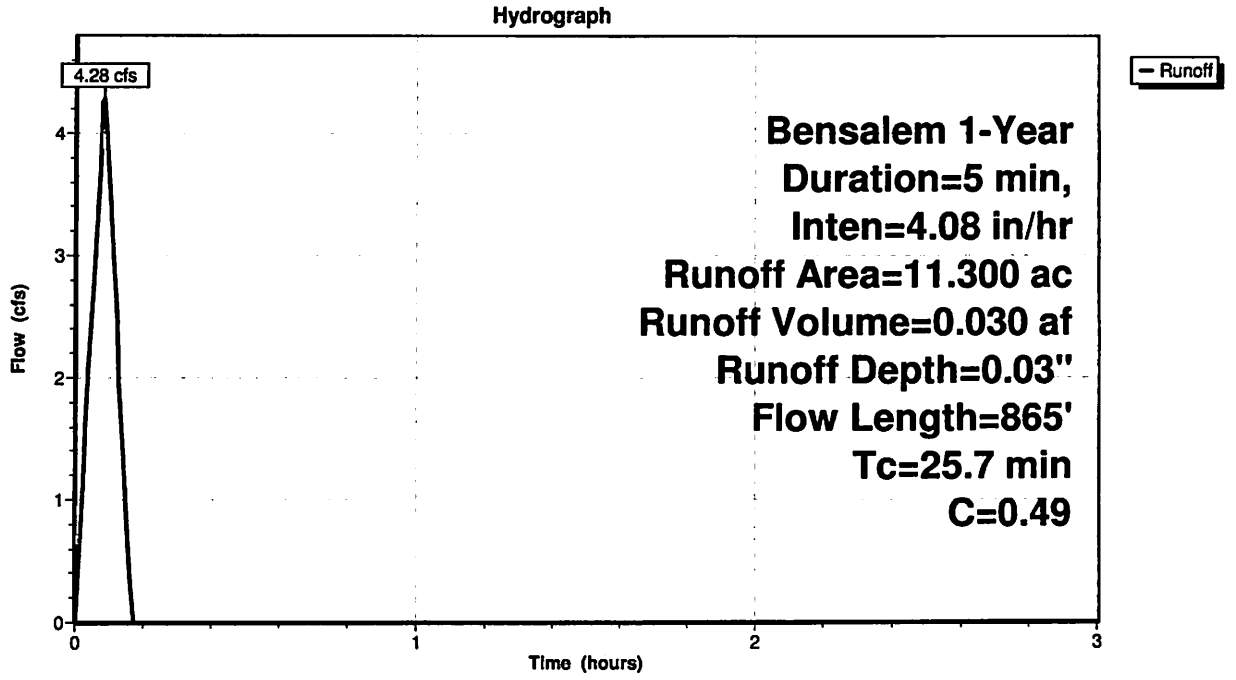

This report was prepared with the free HydroCAD SAMPLER, which is licensed for evaluation and educational use ONLY. For actual design or modeling applications you MUST use a full version of HydroCAD which may be purchased at www.hydrocad.net. Full programs also include complete technical support,training materials, and additional features which are essential for actual design work.

Summary for Subcatchment TRIB-1: TRIBUTARY AREA 1

Runoff = 2.63 cfs @ 0.08 hrs, Volume= 0.019 af, Depth= 0.06"

Runoff by Rational method, Rise/Fall=1.0/1.0 xTc, Time Span= 0.00-3.00 hrs, dt= 0.01 hrs
Bensalem 1-Year Duration=5 min, Inten=4.08 in/hr

Area (ac)	C	Description
2.580	0.96	Impervious
1.060	0.27	Open Space, Good Condition, HSG D
3.640	0.76	Weighted Average
1.060		29.12% Pervious Area
2.580		70.88% Impervious Area

Tc (min)	Length (feet)	Slope (ft/ft)	Velocity (ft/sec)	Capacity (cfs)	Description
20.9					**Direct Entry, Storm Sewers Tab**

Subcatchment TRIB-1: TRIBUTARY AREA 1

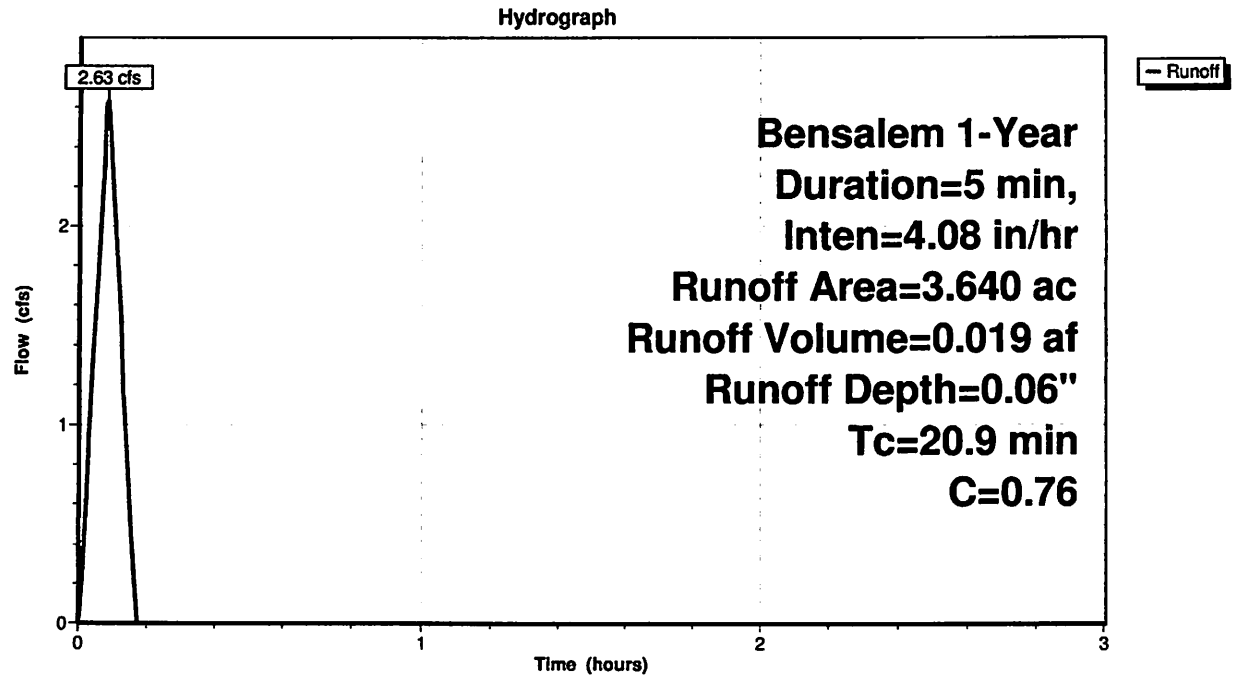

This report was prepared with the free HydroCAD SAMPLER, which is licensed for evaluation and educational use ONLY. For actual design or modeling applications you MUST use a full version of HydroCAD which may be purchased at www.hydrocad.net. Full programs also include complete technical support,training materials, and additional features which are essential for actual design work.

Summary for Reach POA: POA-1

Inflow Area = 11.300 ac, 29.03% Impervious, Inflow Depth = 0.03" for 1-Year event
Inflow = 3.86 cfs @ 0.09 hrs, Volume= 0.033 af
Outflow = 3.86 cfs @ 0.09 hrs, Volume= 0.033 af, Atten= 0%, Lag= 0.0 min

Routing by Stor-Ind+Trans method, Time Span= 0.00-3.00 hrs, dt= 0.01 hrs

Reach POA: POA-1

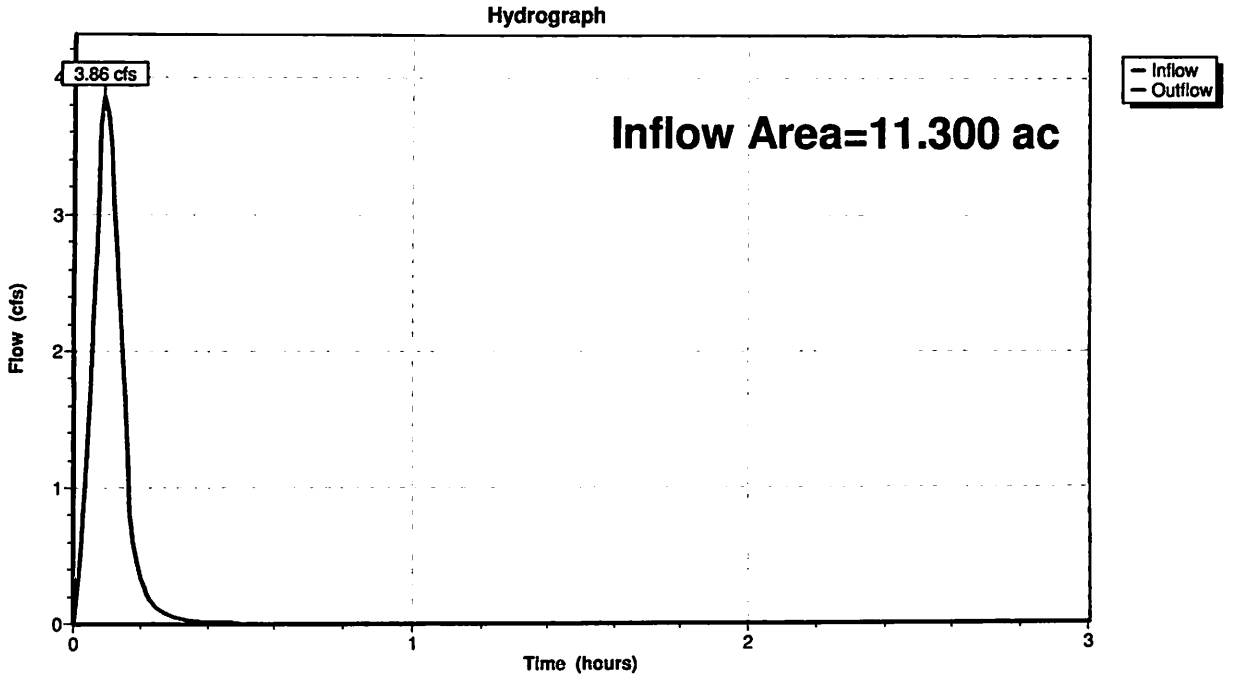

This report was prepared with the free HydroCAD SAMPLER, which is licensed for evaluation and educational use ONLY. For actual design or modeling applications you MUST use a full version of HydroCAD which may be purchased at www.hydrocad.net. Full programs also include complete technical support,training materials, and additional features which are essential for actual design work.

Summary for Pond DW-1: DRY WELL

Inflow Area = 3.640 ac, 70.88% Impervious, Inflow Depth = 0.06" for 1-Year event
Inflow = 2.63 cfs @ 0.08 hrs, Volume= 0.019 af
Outflow = 1.96 cfs @ 0.11 hrs, Volume= 0.018 af, Atten= 26%, Lag= 1.5 min
Discarded = 0.01 cfs @ 0.11 hrs, Volume= 0.001 af
Primary = 1.95 cfs @ 0.11 hrs, Volume= 0.017 af

Routing by Stor-Ind method, Time Span= 0.00-3.00 hrs, dt= 0.01 hrs
Peak Elev= 94.88' @ 0.11 hrs Surf.Area= 1,213 sf Storage= 316 cf

Plug-Flow detention time= 5.9 min calculated for 0.018 af (96% of inflow)
Center-of-Mass det. time= 5.7 min (10.8 - 5.0)

Volume	Invert	Avail.Storage	Storage Description
#1	93.65'	1,634 cf	**102.0" W x 42.0" H Box Dry Well** L= 146.0' S= 0.0086 '/' 4,344 cf Overall - 258 cf Embedded = 4,085 cf x 40.0% Voids
#2	94.15'	258 cf	**18.0" Round Pipe Storage** Inside #1 L= 146.0' S= 0.0086 '/'
#3	97.16'	175 cf	**36.0" W x 12.0" H Box Stone Beneath River Jack** L= 146.0' S= 0.0086 '/' 438 cf Overall x 40.0% Voids
#4	98.17'	88 cf	**36.0" W x 6.0" H Box River Jack** L= 146.0' S= 0.0086 '/' 219 cf Overall x 40.0% Voids
		2,155 cf	Total Available Storage

Device	Routing	Invert	Outlet Devices
#1	Discarded	93.65'	**0.250 in/hr Exfiltration over Surface area**
#2	Primary	94.15'	**18.0" Round Culvert** L= 49.0' CPP, projecting, no headwall, Ke= 0.900 Inlet / Outlet Invert= 94.15' / 93.35' S= 0.0163 '/' Cc= 0.900 n= 0.013 Corrugated PE, smooth interior, Flow Area= 1.77 sf

Discarded OutFlow Max=0.01 cfs @ 0.11 hrs HW=94.88' (Free Discharge)
↑—**1=Exfiltration** (Exfiltration Controls 0.01 cfs)

Primary OutFlow Max=1.94 cfs @ 0.11 hrs HW=94.88' (Free Discharge)
↑—**2=Culvert** (Inlet Controls 1.94 cfs @ 2.29 fps)

This report was prepared with the free HydroCAD SAMPLER, which is licensed for evaluation and educational use ONLY. For actual design or modeling applications you MUST use a full version of HydroCAD which may be purchased at www.hydrocad.net. Full programs also include complete technical support,training materials, and additional features which are essential for actual design work.

Pond DW-1: DRY WELL

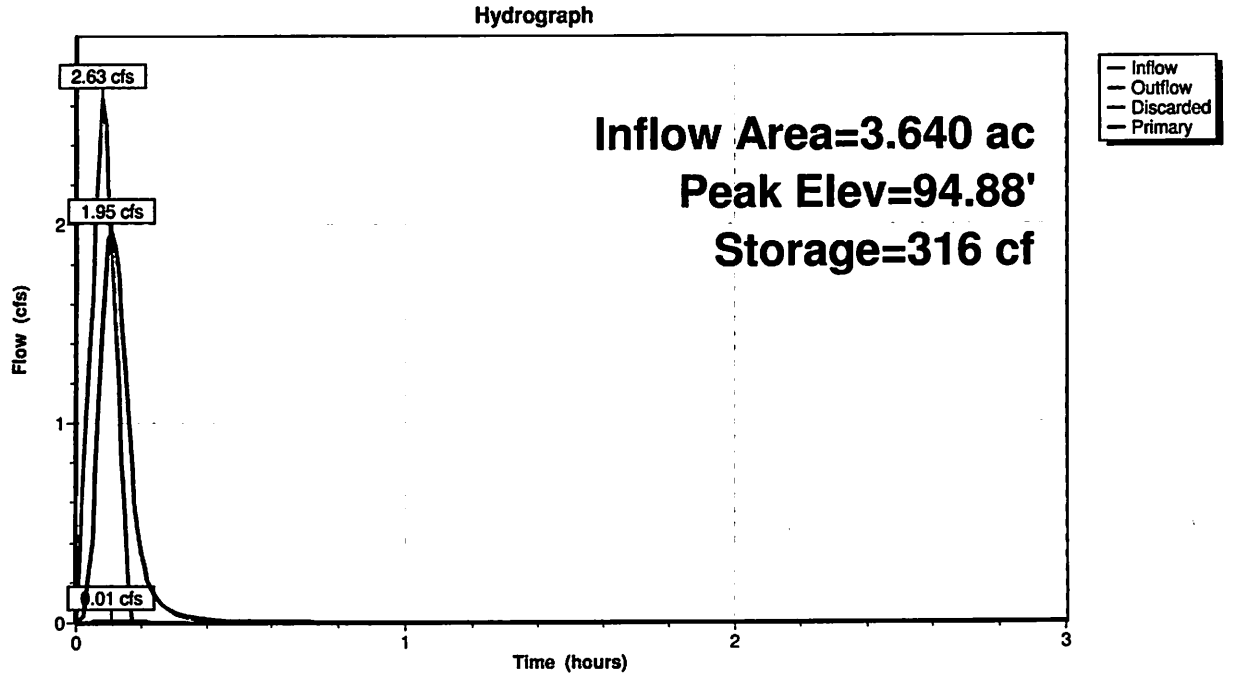

This report was prepared with the free HydroCAD SAMPLER, which is licensed for evaluation and educational use ONLY. For actual design or modeling applications you MUST use a full version of HydroCAD which may be purchased at www.hydrocad.net. Full programs also include complete technical support,training materials, and additional features which are essential for actual design work.

Pond DW-1: DRY WELL

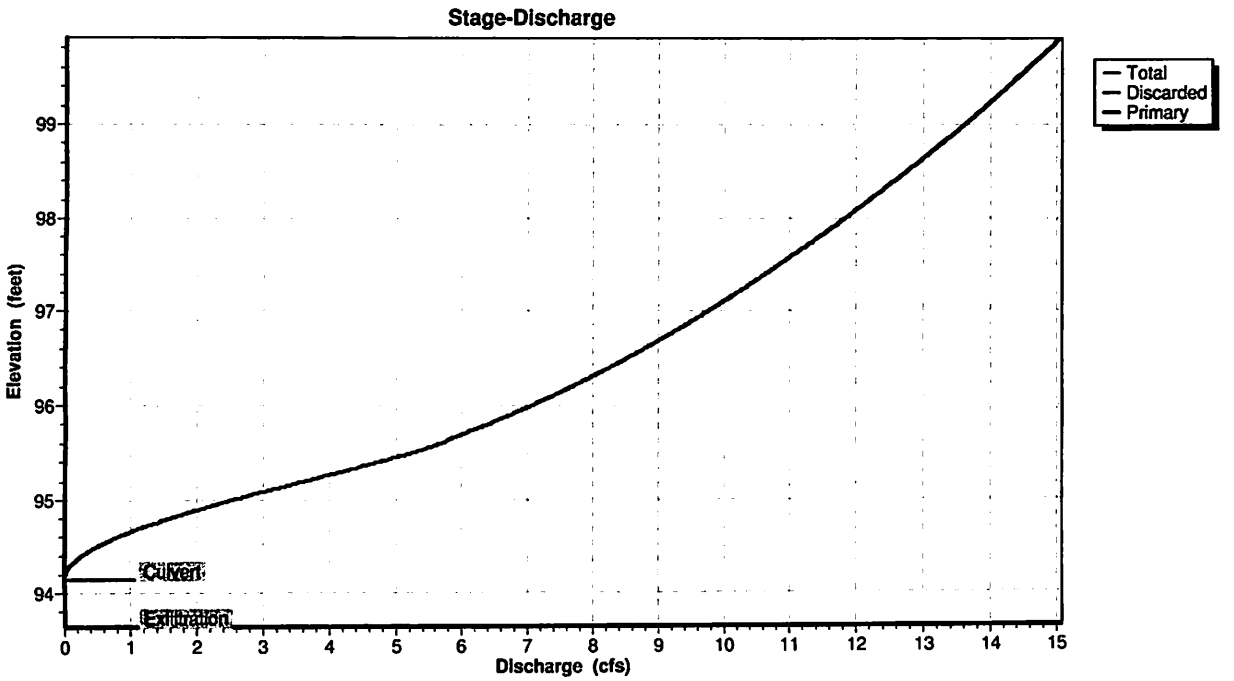

This report was prepared with the free HydroCAD SAMPLER, which is licensed for evaluation and educational use ONLY. For actual design or modeling applications you MUST use a full version of HydroCAD which may be purchased at www.hydrocad.net. Full programs also include complete technical support,training materials, and additional features which are essential for actual design work.

Pond DW-1: DRY WELL

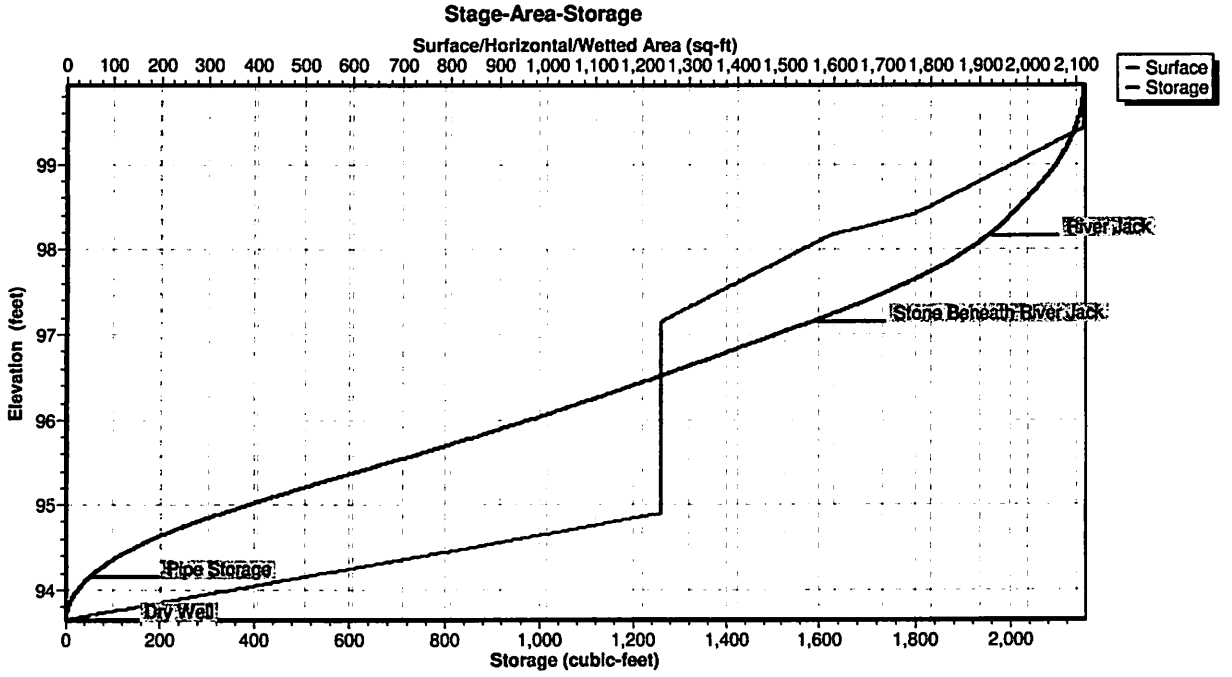

This report was prepared with the free HydroCAD SAMPLER, which is licensed for evaluation and educational use ONLY. For actual design or modeling applications you MUST use a full version of HydroCAD which may be purchased at www.hydrocad.net. Full programs also include complete technical support,training materials, and additional features which are essential for actual design work.

Time span=0.00-3.00 hrs, dt=0.01 hrs, 301 points
Runoff by Rational method, Rise/Fall=1.0/1.0 xTc
Reach routing by Stor-Ind+Trans method - Pond routing by Stor-Ind method

Subcatchment BY-1: BYPASS AREA 1 Runoff Area=7.660 ac 9.14% Impervious Runoff Depth=0.03"
Flow Length=865' Tc=25.7 min C=0.37 Runoff=2.58 cfs 0.018 af

Subcatchment PRE-1: EXISTING Runoff Area=11.300 ac 16.64% Impervious Runoff Depth=0.04"
Flow Length=865' Tc=25.7 min C=0.49 Runoff=5.03 cfs 0.036 af

Subcatchment TRIB-1: TRIBUTARY AREA 1 Runoff Area=3.640 ac 70.88% Impervious Runoff Depth=0.07"
Tc=20.9 min C=0.76 Runoff=3.09 cfs 0.022 af

Reach POA: POA-1 Inflow=4.57 cfs 0.039 af
Outflow=4.57 cfs 0.039 af

Pond DW-1: DRY WELL Peak Elev=94.95' Storage=358 cf Inflow=3.09 cfs 0.022 af
Discarded=0.01 cfs 0.001 af Primary=2.32 cfs 0.021 af Outflow=2.32 cfs 0.021 af

Total Runoff Area = 22.600 ac Runoff Volume = 0.076 af Average Runoff Depth = 0.04"
77.17% Pervious = 17.440 ac 22.83% Impervious = 5.160 ac

This report was prepared with the free HydroCAD SAMPLER, which is licensed for evaluation and educational use ONLY. For actual design or modeling applications you MUST use a full version of HydroCAD which may be purchased at www.hydrocad.net. Full programs also include complete technical support,training materials, and additional features which are essential for actual design work.

Summary for Subcatchment BY-1: BYPASS AREA 1

Runoff = 2.58 cfs @ 0.08 hrs, Volume= 0.018 af, Depth= 0.03"

Runoff by Rational method, Rise/Fall=1.0/1.0 xTc, Time Span= 0.00-3.00 hrs, dt= 0.01 hrs
Bensalem 2-Year Duration=5 min, Inten=4.80 in/hr

Area (ac)	C	Description
0.700	0.96	Impervious
2.280	0.40	Meadow, Good Condition, HSG D
4.680	0.27	Open Space, Good Condition, HSG D
7.660	0.37	Weighted Average
6.960		90.86% Pervious Area
0.700		9.14% Impervious Area

Tc (min)	Length (feet)	Slope (ft/ft)	Velocity (ft/sec)	Capacity (cfs)	Description
19.6	150	0.0200	0.13		**Sheet Flow, Sheet Flow** Grass: Dense n= 0.240 P2= 3.26"
1.9	404	0.0500	3.60		**Shallow Concentrated Flow, Shallow Flow** Unpaved Kv= 16.1 fps
4.2	311	0.0240	1.23	396.32	**Channel Flow, Channel Flow** Area= 321.5 sf Perim= 157.9' r= 2.04' n= 0.300
25.7	865	Total			

This report was prepared with the free HydroCAD SAMPLER, which is licensed for evaluation and educational use ONLY. For actual design or modeling applications you MUST use a full version of HydroCAD which may be purchased at www.hydrocad.net. Full programs also include complete technical support,training materials, and additional features which are essential for actual design work.

Subcatchment BY-1: BYPASS AREA 1

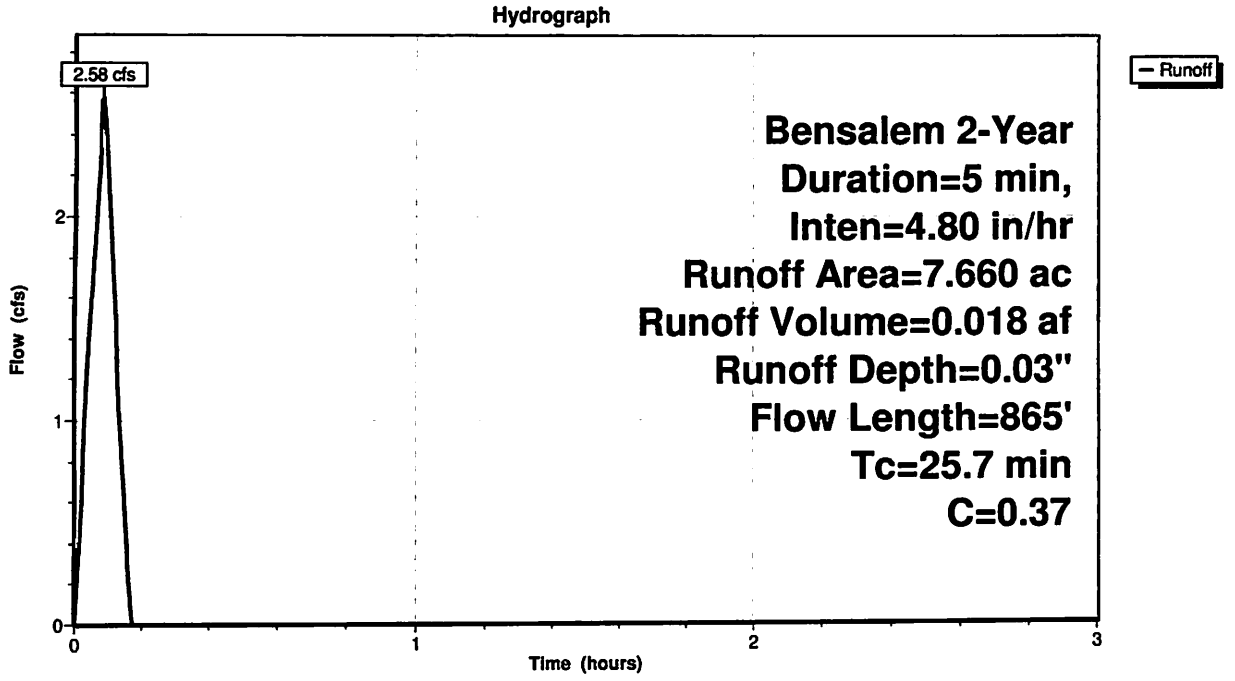

This report was prepared with the free HydroCAD SAMPLER, which is licensed for evaluation and educational use ONLY. For actual design or modeling applications you MUST use a full version of HydroCAD which may be purchased at www.hydrocad.net. Full programs also include complete technical support,training materials, and additional features which are essential for actual design work.

Summary for Subcatchment PRE-1: EXISTING

Runoff = 5.03 cfs @ 0.08 hrs, Volume= 0.036 af, Depth= 0.04"

Runoff by Rational method, Rise/Fall=1.0/1.0 xTc, Time Span= 0.00-3.00 hrs, dt= 0.01 hrs
Bensalem 2-Year Duration=5 min, Inten=4.80 in/hr

Area (ac)	C	Description
1.880	0.96	Impervious
8.950	0.40	Meadow, Good Condition, HSG D
0.470	0.40	20% Impervious, Meadow Good Condition, HSG D
11.300	0.49	Weighted Average
9.420		83.36% Pervious Area
1.880		16.64% Impervious Area

Tc (min)	Length (feet)	Slope (ft/ft)	Velocity (ft/sec)	Capacity (cfs)	Description
19.6	150	0.0200	0.13		**Sheet Flow, Sheet Flow** Grass: Dense n= 0.240 P2= 3.26"
1.2	240	0.0400	3.22		**Shallow Concentrated Flow, Shallow Flow** Unpaved Kv= 16.1 fps
0.1	16	0.0100	2.03		**Shallow Concentrated Flow, Shallow Flow** Paved Kv= 20.3 fps
0.6	148	0.0690	4.23		**Shallow Concentrated Flow, Shallow Flow** Unpaved Kv= 16.1 fps
4.2	311	0.0240	1.23	396.32	**Channel Flow, Channel Flow** Area= 321.5 sf Perim= 157.9' r= 2.04' n= 0.300
25.7	865	Total			

This report was prepared with the free HydroCAD SAMPLER, which is licensed for evaluation and educational use ONLY. For actual design or modeling applications you MUST use a full version of HydroCAD which may be purchased at www.hydrocad.net. Full programs also include complete technical support,training materials, and additional features which are essential for actual design work.

Subcatchment PRE-1: EXISTING

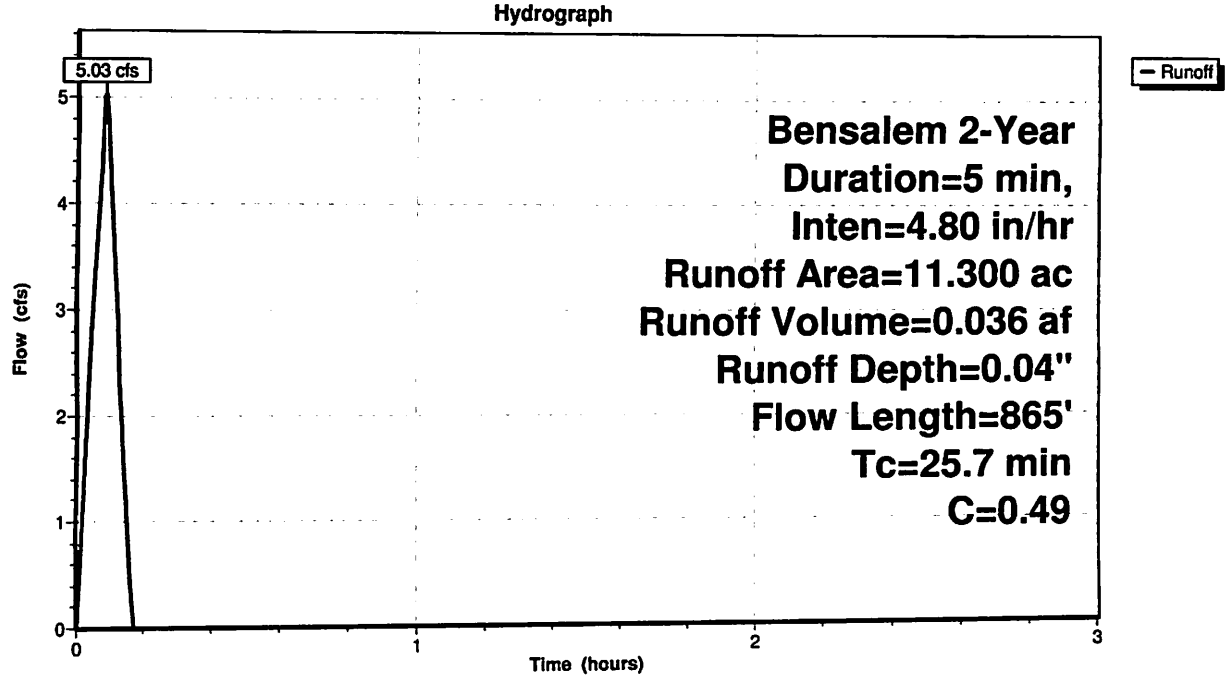

This report was prepared with the free HydroCAD SAMPLER, which is licensed for evaluation and educational use ONLY. For actual design or modeling applications you MUST use a full version of HydroCAD which may be purchased at www.hydrocad.net. Full programs also include complete technical support,training materials, and additional features which are essential for actual design work.

Summary for Subcatchment TRIB-1: TRIBUTARY AREA 1

Runoff = 3.09 cfs @ 0.08 hrs, Volume= 0.022 af, Depth= 0.07"

Runoff by Rational method, Rise/Fall=1.0/1.0 xTc, Time Span= 0.00-3.00 hrs, dt= 0.01 hrs
Bensalem 2-Year Duration=5 min, Inten=4.80 in/hr

Area (ac)	C	Description
2.580	0.96	Impervious
1.060	0.27	Open Space, Good Condition, HSG D
3.640	0.76	Weighted Average
1.060		29.12% Pervious Area
2.580		70.88% Impervious Area

Tc (min)	Length (feet)	Slope (ft/ft)	Velocity (ft/sec)	Capacity (cfs)	Description
20.9					**Direct Entry, Storm Sewers Tab**

Subcatchment TRIB-1: TRIBUTARY AREA 1

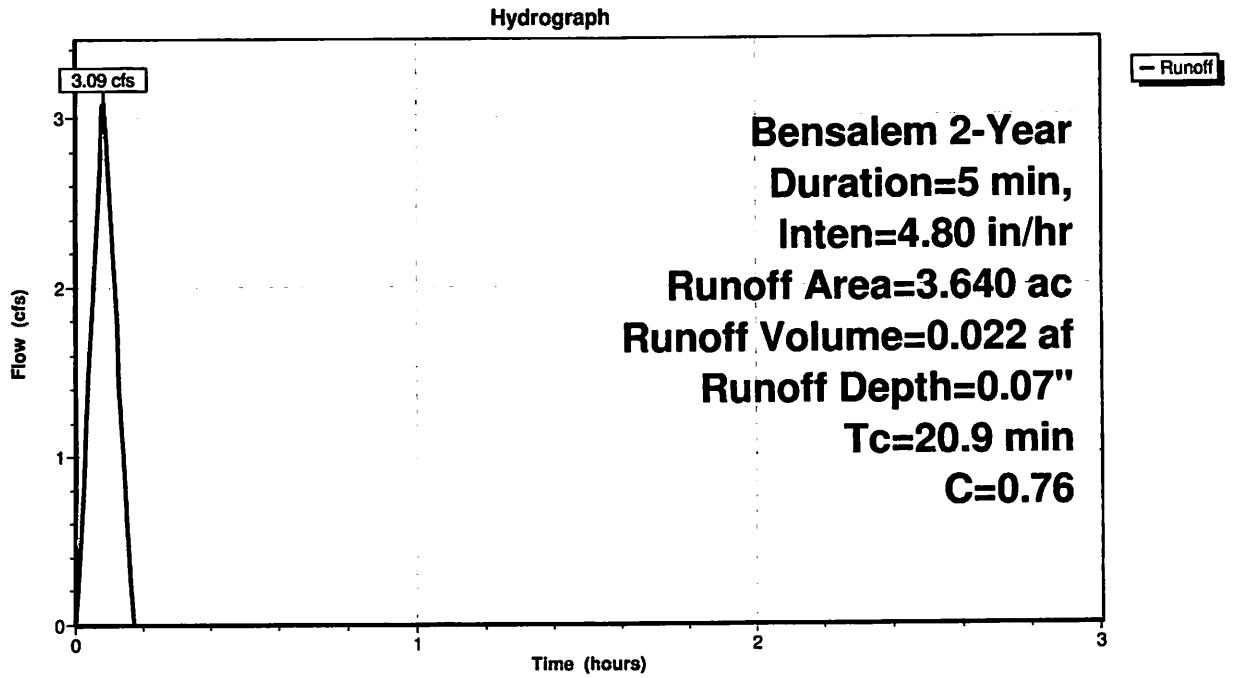

This report was prepared with the free HydroCAD SAMPLER, which is licensed for evaluation and educational use ONLY. For actual design or modeling applications you MUST use a full version of HydroCAD which may be purchased at www.hydrocad.net. Full programs also include complete technical support,training materials, and additional features which are essential for actual design work.

Summary for Reach POA: POA-1

Inflow Area = 11.300 ac, 29.03% Impervious, Inflow Depth = 0.04" for 2-Year event
Inflow = 4.57 cfs @ 0.09 hrs, Volume= 0.039 af
Outflow = 4.57 cfs @ 0.09 hrs, Volume= 0.039 af, Atten= 0%, Lag= 0.0 min

Routing by Stor-Ind+Trans method, Time Span= 0.00-3.00 hrs, dt= 0.01 hrs

Reach POA: POA-1

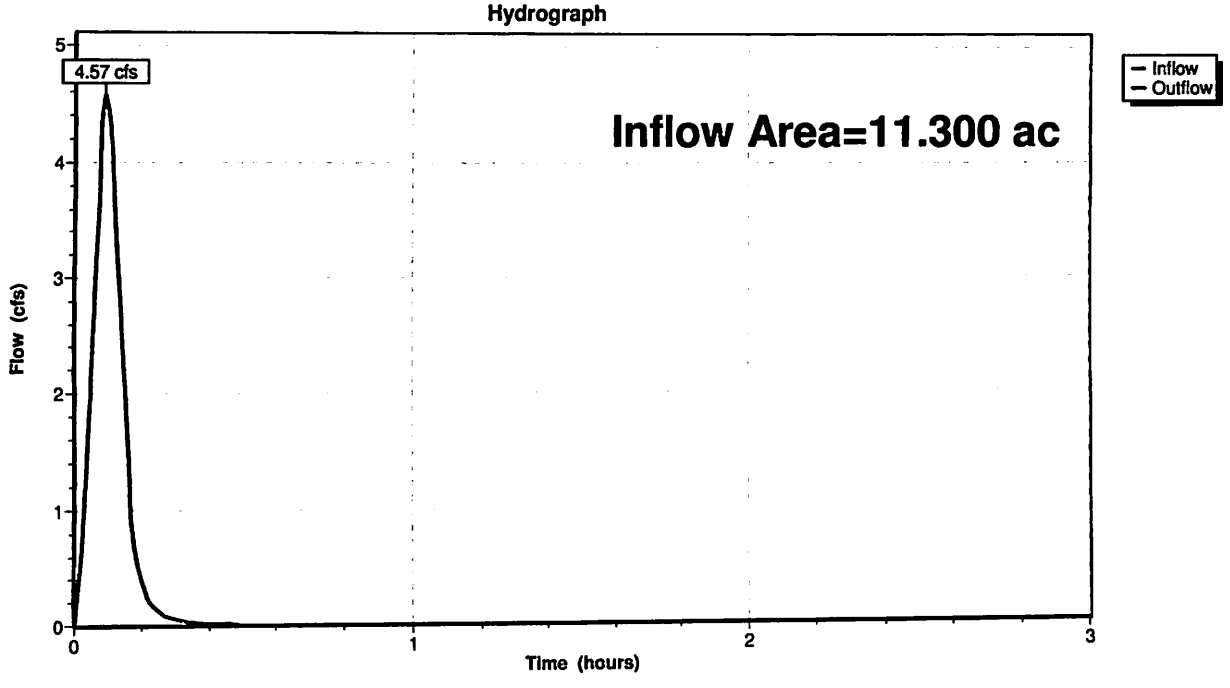

This report was prepared with the free HydroCAD SAMPLER, which is licensed for evaluation and educational use ONLY. For actual design or modeling applications you MUST use a full version of HydroCAD which may be purchased at www.hydrocad.net. Full programs also include complete technical support,training materials, and additional features which are essential for actual design work.

Summary for Pond DW-1: DRY WELL

Inflow Area =	3.640 ac, 70.88% Impervious,	Inflow Depth =	0.07"	for 2-Year event
Inflow =	3.09 cfs @	0.08 hrs, Volume=	0.022 af	
Outflow =	2.32 cfs @	0.11 hrs, Volume=	0.021 af,	Atten= 25%, Lag= 1.5 min
Discarded =	0.01 cfs @	0.09 hrs, Volume=	0.001 af	
Primary =	2.32 cfs @	0.11 hrs, Volume=	0.021 af	

Routing by Stor-Ind method, Time Span= 0.00-3.00 hrs, dt= 0.01 hrs
Peak Elev= 94.95' @ 0.11 hrs Surf.Area= 1,241 sf Storage= 358 cf

Plug-Flow detention time= 5.3 min calculated for 0.021 af (97% of inflow)
Center-of-Mass det. time= 5.2 min (10.2 - 5.0)

Volume	Invert	Avail.Storage	Storage Description
#1	93.65'	1,634 cf	**102.0" W x 42.0" H Box Dry Well** L= 146.0' S= 0.0086 '/' 4,344 cf Overall - 258 cf Embedded = 4,085 cf x 40.0% Voids
#2	94.15'	258 cf	**18.0" Round Pipe Storage** Inside #1 L= 146.0' S= 0.0086 '/'
#3	97.16'	175 cf	**36.0" W x 12.0" H Box Stone Beneath River Jack** L= 146.0' S= 0.0086 '/' 438 cf Overall x 40.0% Voids
#4	98.17'	88 cf	**36.0" W x 6.0" H Box River Jack** L= 146.0' S= 0.0086 '/' 219 cf Overall x 40.0% Voids
		2,155 cf	Total Available Storage

Device	Routing	Invert	Outlet Devices
#1	Discarded	93.65'	**0.250 in/hr Exfiltration over Surface area**
#2	Primary	94.15'	**18.0" Round Culvert** L= 49.0' CPP, projecting, no headwall, Ke= 0.900 Inlet / Outlet Invert= 94.15' / 93.35' S= 0.0163 '/' Cc= 0.900 n= 0.013 Corrugated PE, smooth interior, Flow Area= 1.77 sf

Discarded OutFlow Max=0.01 cfs @ 0.09 hrs HW=94.91' (Free Discharge)
↑**1=Exfiltration** (Exfiltration Controls 0.01 cfs)

Primary OutFlow Max=2.30 cfs @ 0.11 hrs HW=94.95' (Free Discharge)
↑**2=Culvert** (Inlet Controls 2.30 cfs @ 2.40 fps)

This report was prepared with the free HydroCAD SAMPLER, which is licensed for evaluation and educational use ONLY. For actual design or modeling applications you MUST use a full version of HydroCAD which may be purchased at www.hydrocad.net. Full programs also include complete technical support,training materials, and additional features which are essential for actual design work.

Pond DW-1: DRY WELL

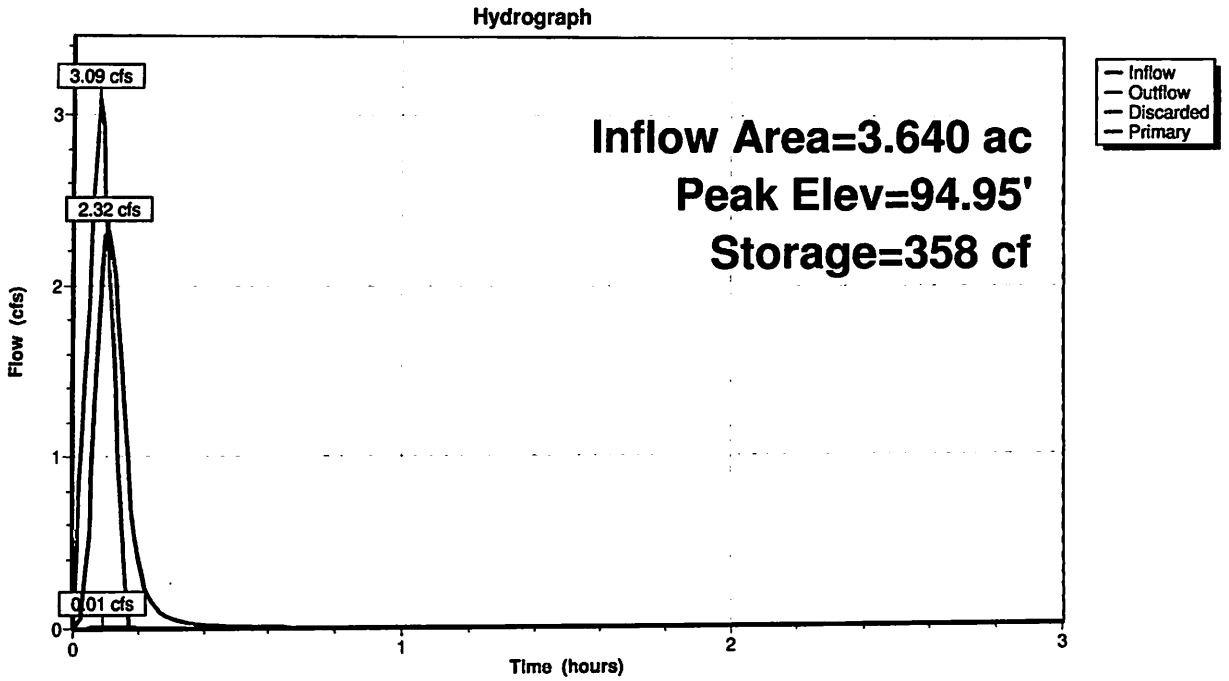

This report was prepared with the free HydroCAD SAMPLER, which is licensed for evaluation and educational use ONLY. For actual design or modeling applications you MUST use a full version of HydroCAD which may be purchased at www.hydrocad.net. Full programs also include complete technical support,training materials, and additional features which are essential for actual design work.

Pond DW-1: DRY WELL

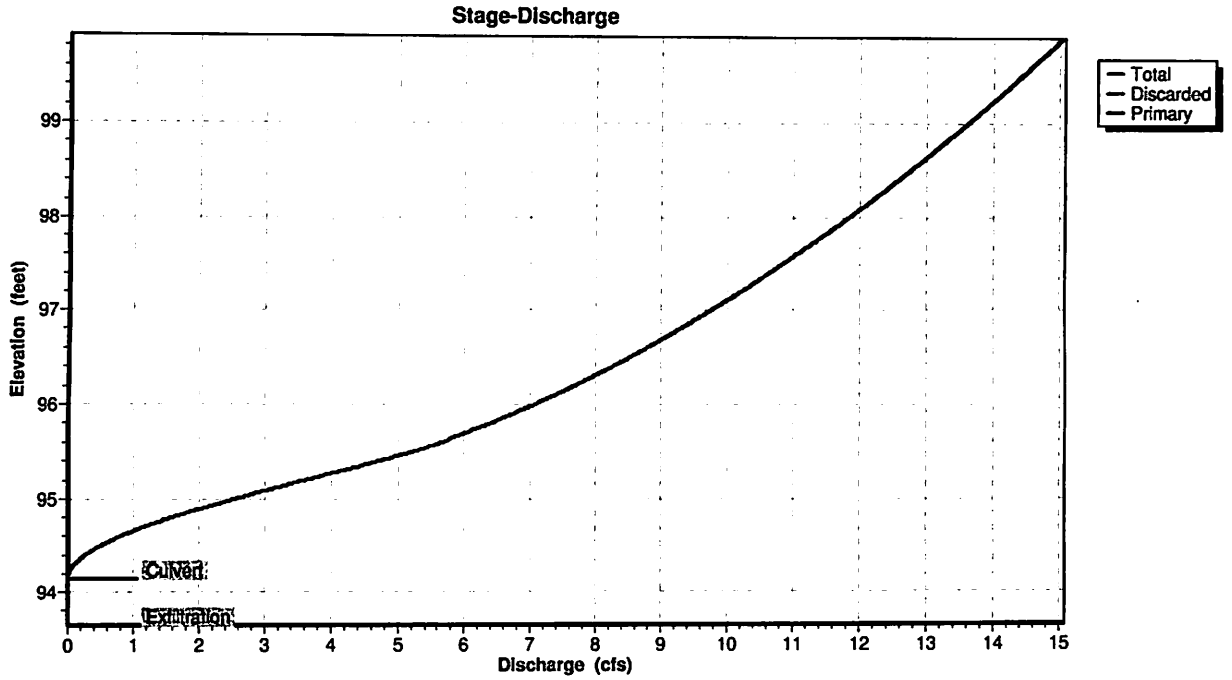

This report was prepared with the free HydroCAD SAMPLER, which is licensed for evaluation and educational use ONLY. For actual design or modeling applications you MUST use a full version of HydroCAD which may be purchased at www.hydrocad.net. Full programs also include complete technical support,training materials, and additional features which are essential for actual design work.

Pond DW-1: DRY WELL

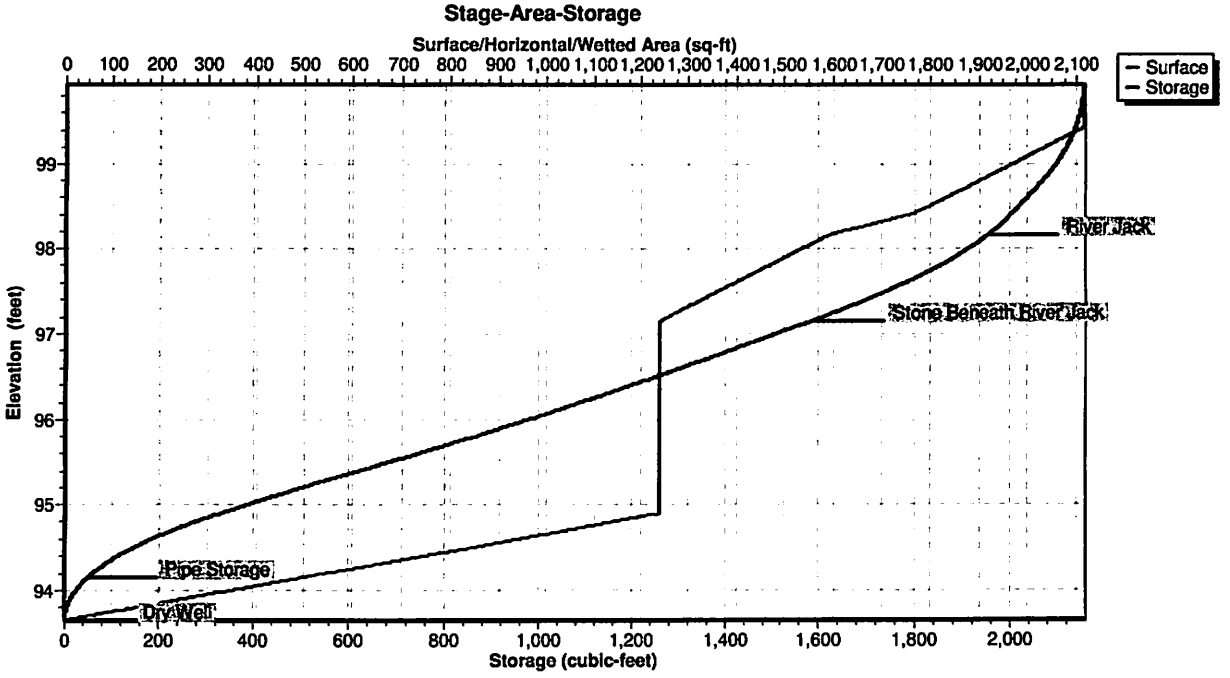

This report was prepared with the free HydroCAD SAMPLER, which is licensed for evaluation and educational use ONLY. For actual design or modeling applications you MUST use a full version of HydroCAD which may be purchased at www.hydrocad.net. Full programs also include complete technical support,training materials, and additional features which are essential for actual design work.

Time span=0.00-3.00 hrs, dt=0.01 hrs, 301 points
Runoff by Rational method, Rise/Fall=1.0/1.0 xTc
Reach routing by Stor-Ind+Trans method - Pond routing by Stor-Ind method

Subcatchment BY-1: BYPASS AREA 1 Runoff Area=7.660 ac 9.14% Impervious Runoff Depth=0.03"
Flow Length=865' Tc=25.7 min C=0.37 Runoff=3.03 cfs 0.022 af

Subcatchment PRE-1: EXISTING Runoff Area=11.300 ac 16.64% Impervious Runoff Depth=0.04"
Flow Length=865' Tc=25.7 min C=0.49 Runoff=5.91 cfs 0.042 af

Subcatchment TRIB-1: TRIBUTARY AREA 1 Runoff Area=3.640 ac 70.88% Impervious Runoff Depth=0.09"
Tc=20.9 min C=0.76 Runoff=3.63 cfs 0.026 af

Reach POA: POA-1 Inflow=5.41 cfs 0.046 af
Outflow=5.41 cfs 0.046 af

Pond DW-1: DRY WELL Peak Elev=95.04' Storage=405 cf Inflow=3.63 cfs 0.026 af
Discarded=0.01 cfs 0.001 af Primary=2.75 cfs 0.024 af Outflow=2.76 cfs 0.025 af

Total Runoff Area = 22.600 ac Runoff Volume = 0.090 af Average Runoff Depth = 0.05"
77.17% Pervious = 17.440 ac 22.83% Impervious = 5.160 ac

This report was prepared with the free HydroCAD SAMPLER, which is licensed for evaluation and educational use ONLY. For actual design or modeling applications you MUST use a full version of HydroCAD which may be purchased at www.hydrocad.net. Full programs also include complete technical support,training materials, and additional features which are essential for actual design work.

Summary for Subcatchment BY-1: BYPASS AREA 1

Runoff = 3.03 cfs @ 0.08 hrs, Volume= 0.022 af, Depth= 0.03"

Runoff by Rational method, Rise/Fall=1.0/1.0 xTc, Time Span= 0.00-3.00 hrs, dt= 0.01 hrs
Bensalem 5-Year Duration=5 min, Inten=5.64 in/hr

Area (ac)	C	Description
0.700	0.96	Impervious
2.280	0.40	Meadow, Good Condition, HSG D
4.680	0.27	Open Space, Good Condition, HSG D
7.660	0.37	Weighted Average
6.960		90.86% Pervious Area
0.700		9.14% Impervious Area

Tc (min)	Length (feet)	Slope (ft/ft)	Velocity (ft/sec)	Capacity (cfs)	Description
19.6	150	0.0200	0.13		**Sheet Flow, Sheet Flow** Grass: Dense n= 0.240 P2= 3.26"
1.9	404	0.0500	3.60		**Shallow Concentrated Flow, Shallow Flow** Unpaved Kv= 16.1 fps
4.2	311	0.0240	1.23	396.32	**Channel Flow, Channel Flow** Area= 321.5 sf Perim= 157.9' r= 2.04' n= 0.300
25.7	865	Total			

This report was prepared with the free HydroCAD SAMPLER, which is licensed for evaluation and educational use ONLY. For actual design or modeling applications you MUST use a full version of HydroCAD which may be purchased at www.hydrocad.net. Full programs also include complete technical support,training materials, and additional features which are essential for actual design work.

Subcatchment BY-1: BYPASS AREA 1

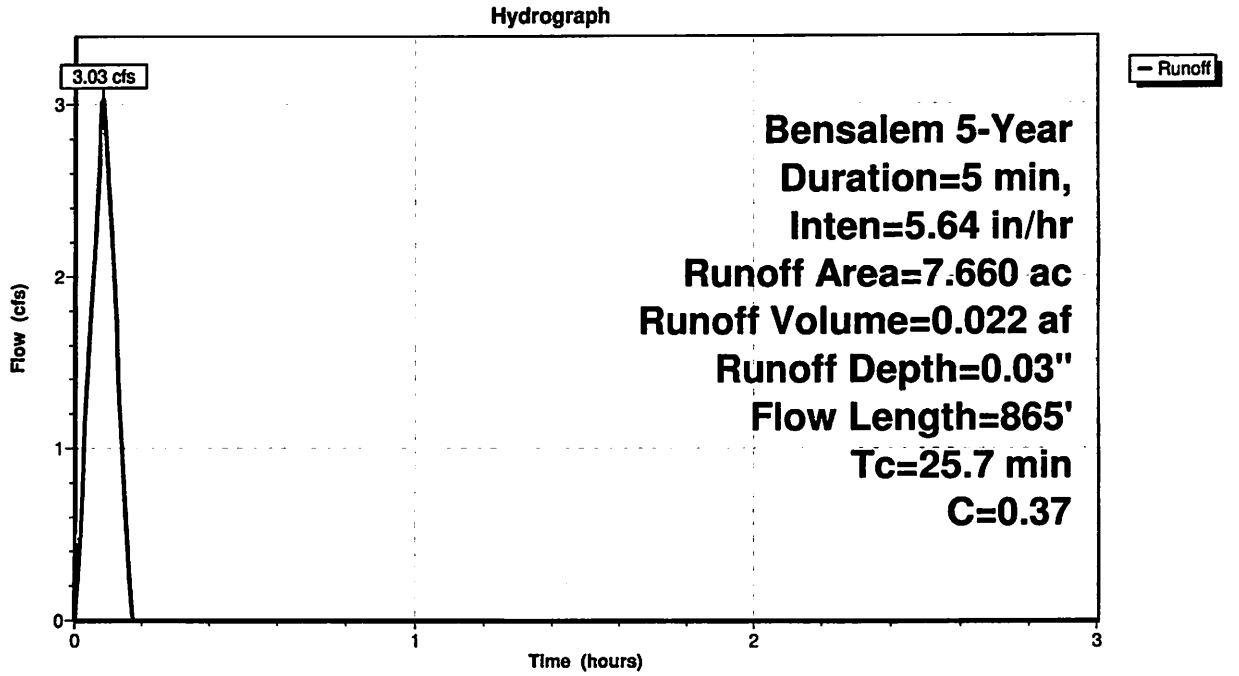

This report was prepared with the free HydroCAD SAMPLER, which is licensed for evaluation and educational use ONLY. For actual design or modeling applications you MUST use a full version of HydroCAD which may be purchased at www.hydrocad.net. Full programs also include complete technical support,training materials, and additional features which are essential for actual design work.

Summary for Subcatchment PRE-1: EXISTING

Runoff = 5.91 cfs @ 0.08 hrs, Volume= 0.042 af, Depth= 0.04"

Runoff by Rational method, Rise/Fall=1.0/1.0 xTc, Time Span= 0.00-3.00 hrs, dt= 0.01 hrs
Bensalem 5-Year Duration=5 min, Inten=5.64 in/hr

Area (ac)	C	Description
1.880	0.96	Impervious
8.950	0.40	Meadow, Good Condition, HSG D
0.470	0.40	20% Impervious, Meadow Good Condition, HSG D
11.300	0.49	Weighted Average
9.420		83.36% Pervious Area
1.880		16.64% Impervious Area

Tc (min)	Length (feet)	Slope (ft/ft)	Velocity (ft/sec)	Capacity (cfs)	Description
19.6	150	0.0200	0.13		**Sheet Flow, Sheet Flow** Grass: Dense n= 0.240 P2= 3.26"
1.2	240	0.0400	3.22		**Shallow Concentrated Flow, Shallow Flow** Unpaved Kv= 16.1 fps
0.1	16	0.0100	2.03		**Shallow Concentrated Flow, Shallow Flow** Paved Kv= 20.3 fps
0.6	148	0.0690	4.23		**Shallow Concentrated Flow, Shallow Flow** Unpaved Kv= 16.1 fps
4.2	311	0.0240	1.23	396.32	**Channel Flow, Channel Flow** Area= 321.5 sf Perim= 157.9' r= 2.04' n= 0.300
25.7	865	Total			

This report was prepared with the free HydroCAD SAMPLER, which is licensed for evaluation and educational use ONLY. For actual design or modeling applications you MUST use a full version of HydroCAD which may be purchased at www.hydrocad.net. Full programs also include complete technical support,training materials, and additional features which are essential for actual design work.

Subcatchment PRE-1: EXISTING

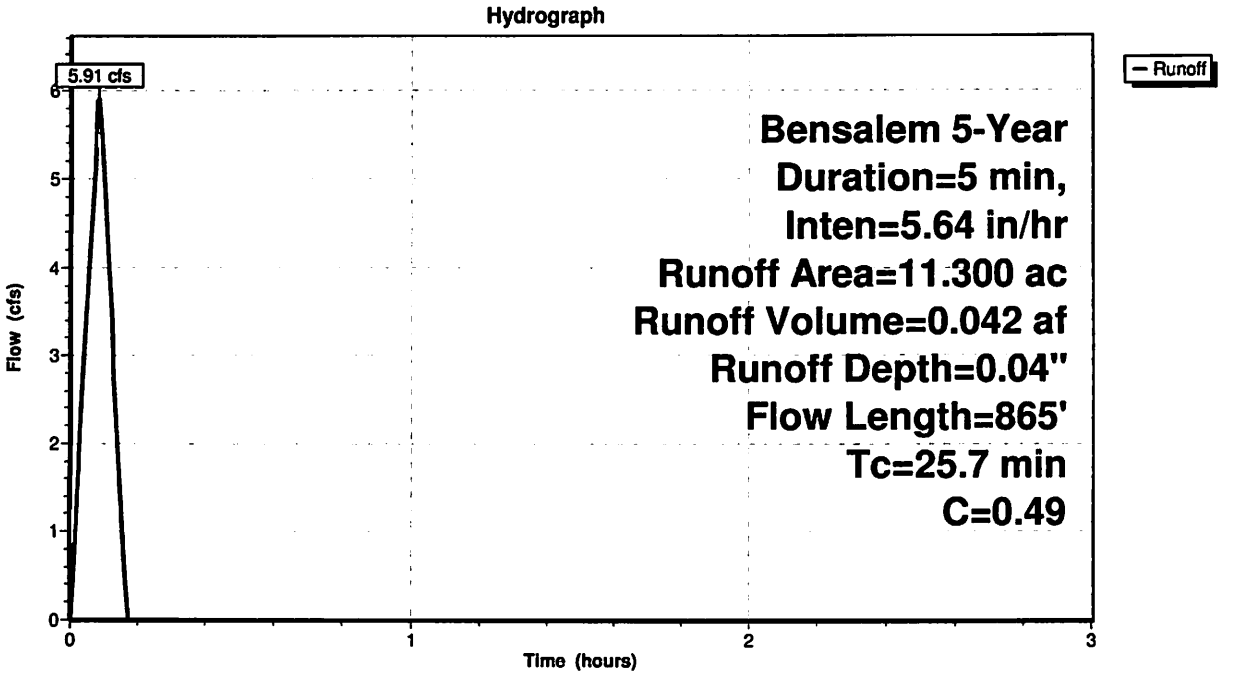

This report was prepared with the free HydroCAD SAMPLER, which is licensed for evaluation and educational use ONLY. For actual design or modeling applications you MUST use a full version of HydroCAD which may be purchased at www.hydrocad.net. Full programs also include complete technical support,training materials, and additional features which are essential for actual design work.

Summary for Subcatchment TRIB-1: TRIBUTARY AREA 1

Runoff = 3.63 cfs @ 0.08 hrs, Volume= 0.026 af, Depth= 0.09"

Runoff by Rational method, Rise/Fall=1.0/1.0 xTc, Time Span= 0.00-3.00 hrs, dt= 0.01 hrs
Bensalem 5-Year Duration=5 min, Inten=5.64 in/hr

Area (ac)	C	Description
2.580	0.96	Impervious
1.060	0.27	Open Space, Good Condition, HSG D
3.640	0.76	Weighted Average
1.060		29.12% Pervious Area
2.580		70.88% Impervious Area

Tc (min)	Length (feet)	Slope (ft/ft)	Velocity (ft/sec)	Capacity (cfs)	Description
20.9					**Direct Entry, Storm Sewers Tab**

Subcatchment TRIB-1: TRIBUTARY AREA 1

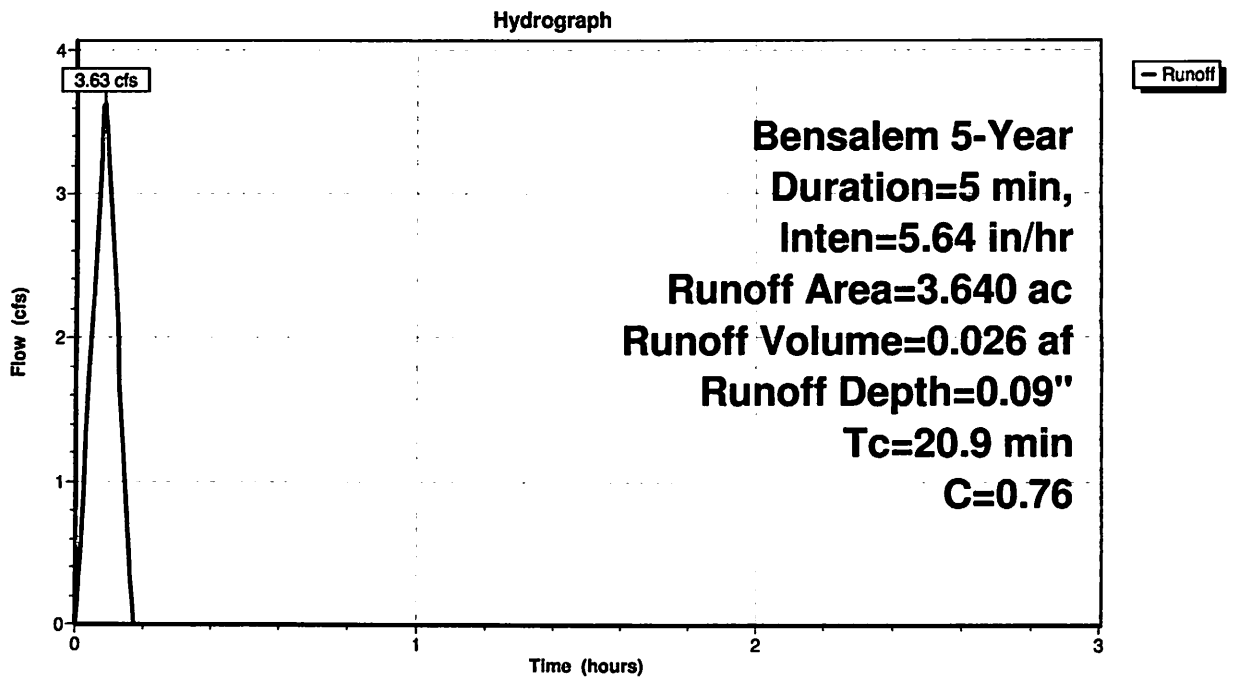

This report was prepared with the free HydroCAD SAMPLER, which is licensed for evaluation and educational use ONLY. For actual design or modeling applications you MUST use a full version of HydroCAD which may be purchased at www.hydrocad.net. Full programs also include complete technical support,training materials, and additional features which are essential for actual design work.

Summary for Reach POA: POA-1

Inflow Area = 11.300 ac, 29.03% Impervious, Inflow Depth = 0.05" for 5-Year event
Inflow = 5.41 cfs @ 0.09 hrs, Volume= 0.046 af
Outflow = 5.41 cfs @ 0.09 hrs, Volume= 0.046 af, Atten= 0%, Lag= 0.0 min

Routing by Stor-Ind+Trans method, Time Span= 0.00-3.00 hrs, dt= 0.01 hrs

Reach POA: POA-1

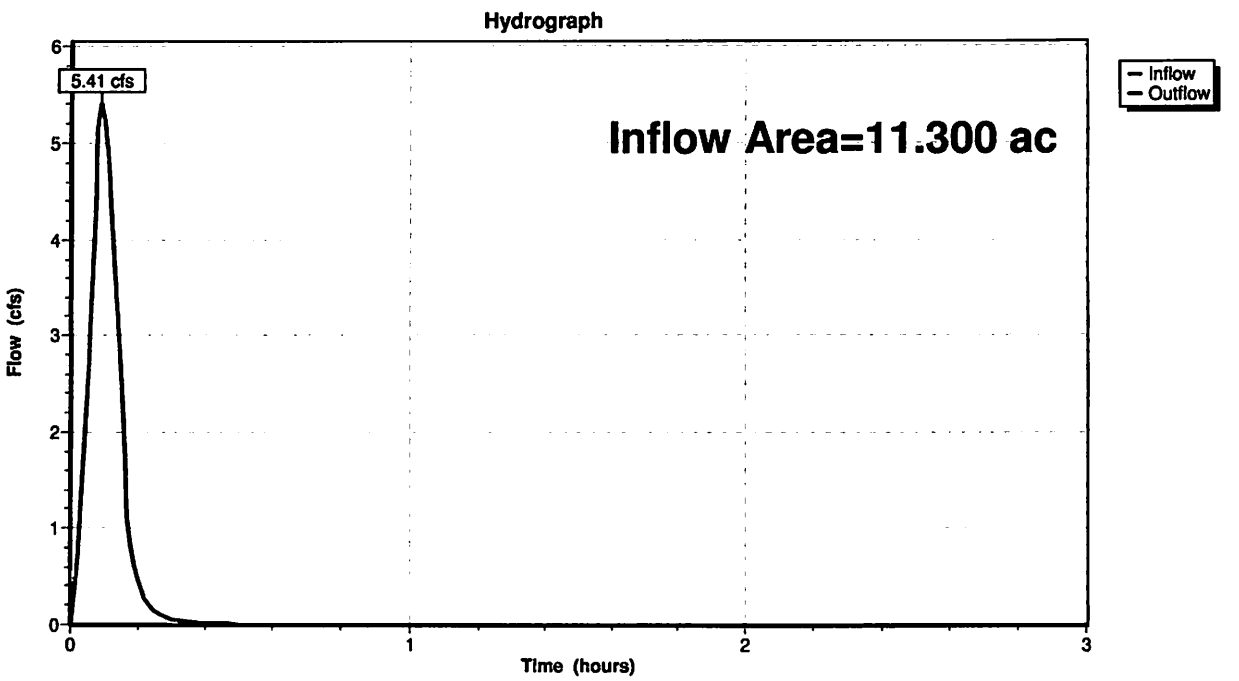

This report was prepared with the free HydroCAD SAMPLER, which is licensed for evaluation and educational use ONLY. For actual design or modeling applications you MUST use a full version of HydroCAD which may be purchased at www.hydrocad.net. Full programs also include complete technical support,training materials, and additional features which are essential for actual design work.

Summary for Pond DW-1: DRY WELL

Inflow Area =	3.640 ac,	70.88% Impervious,	Inflow Depth =	0.09"	for 5-Year event
Inflow =	3.63 cfs @	0.08 hrs, Volume=	0.026 af		
Outflow =	2.76 cfs @	0.11 hrs, Volume=	0.025 af,	Atten= 24%,	Lag= 1.4 min
Discarded =	0.01 cfs @	0.08 hrs, Volume=	0.001 af		
Primary =	2.75 cfs @	0.11 hrs, Volume=	0.024 af		

Routing by Stor-Ind method, Time Span= 0.00-3.00 hrs, dt= 0.01 hrs
Peak Elev= 95.04' @ 0.11 hrs Surf.Area= 1,241 sf Storage= 405 cf

Plug-Flow detention time= 4.8 min calculated for 0.025 af (97% of inflow)
Center-of-Mass det. time= 4.7 min (9.7 - 5.0)

Volume	Invert	Avail.Storage	Storage Description
#1	93.65'	1,634 cf	**102.0" W x 42.0" H Box Dry Well** L= 146.0' S= 0.0086 '/' 4,344 cf Overall - 258 cf Embedded = 4,085 cf x 40.0% Voids
#2	94.15'	258 cf	**18.0" Round Pipe Storage** Inside #1 L= 146.0' S= 0.0086 '/'
#3	97.16'	175 cf	**36.0" W x 12.0" H Box Stone Beneath River Jack** L= 146.0' S= 0.0086 '/' 438 cf Overall x 40.0% Voids
#4	98.17'	88 cf	**36.0" W x 6.0" H Box River Jack** L= 146.0' S= 0.0086 '/' 219 cf Overall x 40.0% Voids
		2,155 cf	Total Available Storage

Device	Routing	Invert	Outlet Devices
#1	Discarded	93.65'	**0.250 in/hr Exfiltration over Surface area**
#2	Primary	94.15'	**18.0" Round Culvert** L= 49.0' CPP, projecting, no headwall, Ke= 0.900 Inlet / Outlet Invert= 94.15' / 93.35' S= 0.0163 '/' Cc= 0.900 n= 0.013 Corrugated PE, smooth interior, Flow Area= 1.77 sf

Discarded OutFlow Max=0.01 cfs @ 0.08 hrs HW=94.92' (Free Discharge)
↑**1=Exfiltration** (Exfiltration Controls 0.01 cfs)

Primary OutFlow Max=2.73 cfs @ 0.11 hrs HW=95.03' (Free Discharge)
↑**2=Culvert** (Inlet Controls 2.73 cfs @ 2.53 fps)

This report was prepared with the free HydroCAD SAMPLER, which is licensed for evaluation and educational use ONLY. For actual design or modeling applications you MUST use a full version of HydroCAD which may be purchased at www.hydrocad.net. Full programs also include complete technical support,training materials, and additional features which are essential for actual design work.

Pond DW-1: DRY WELL

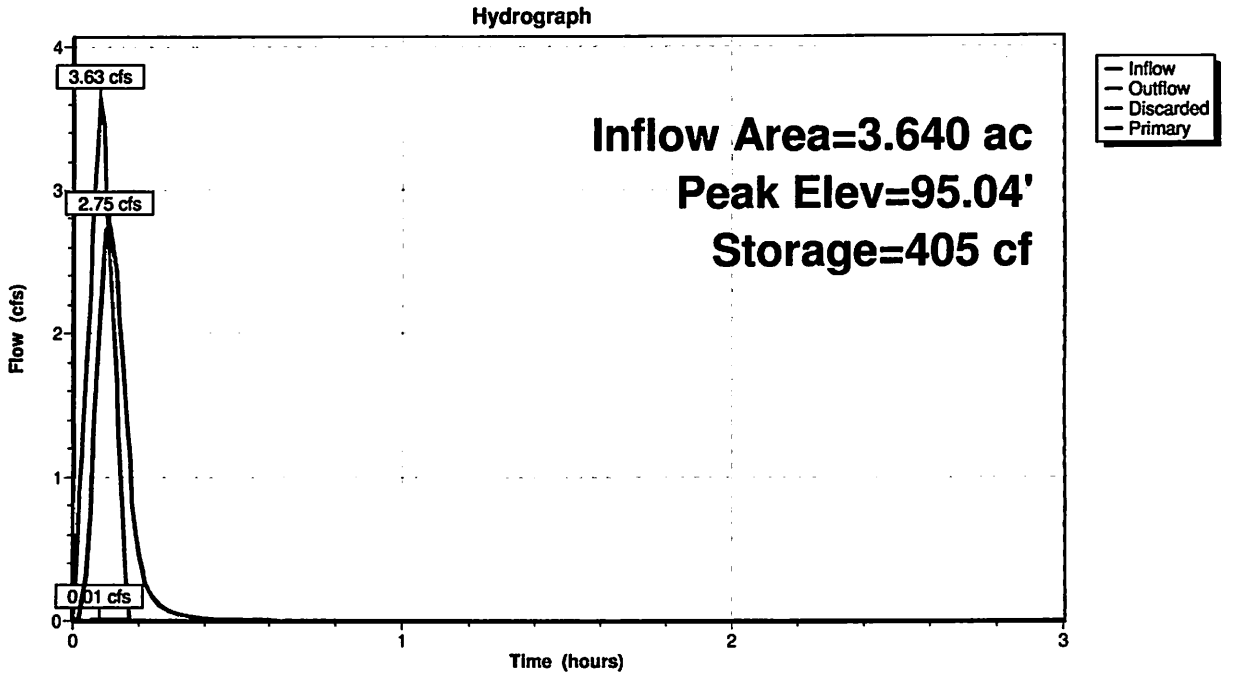

This report was prepared with the free HydroCAD SAMPLER, which is licensed for evaluation and educational use ONLY. For actual design or modeling applications you MUST use a full version of HydroCAD which may be purchased at www.hydrocad.net. Full programs also include complete technical support,training materials, and additional features which are essential for actual design work.

Pond DW-1: DRY WELL

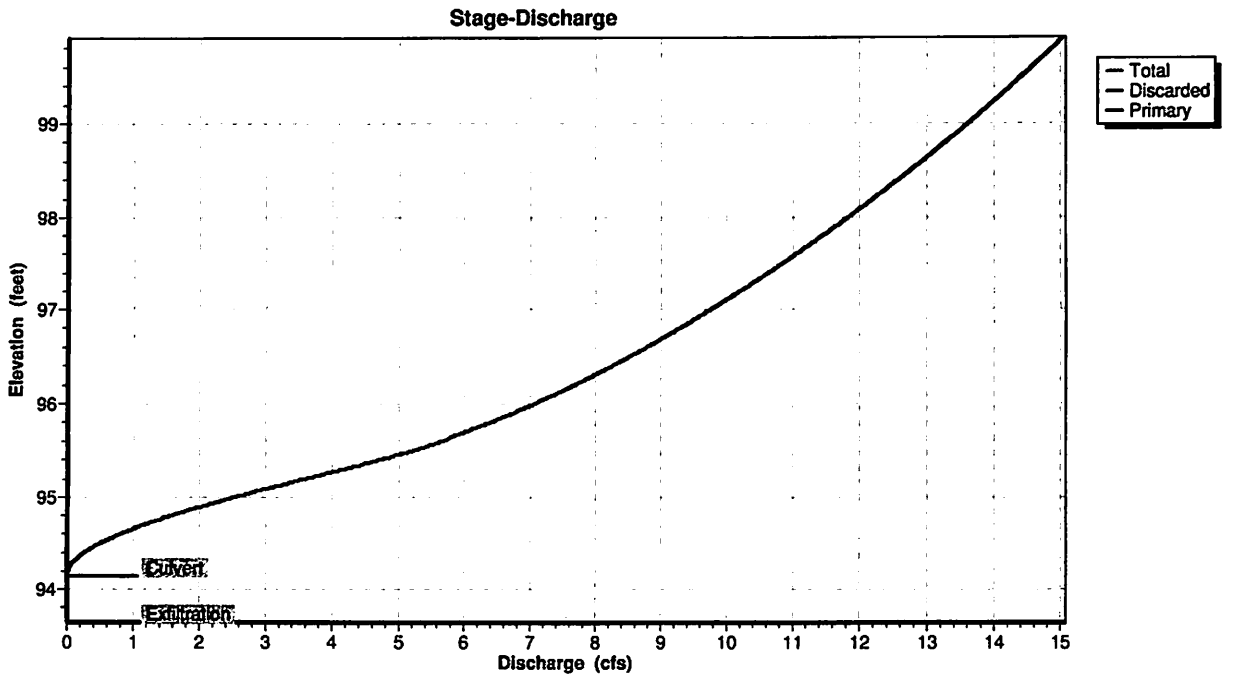

This report was prepared with the free HydroCAD SAMPLER, which is licensed for evaluation and educational use ONLY. For actual design or modeling applications you MUST use a full version of HydroCAD which may be purchased at www.hydrocad.net. Full programs also include complete technical support,training materials, and additional features which are essential for actual design work.

Pond DW-1: DRY WELL

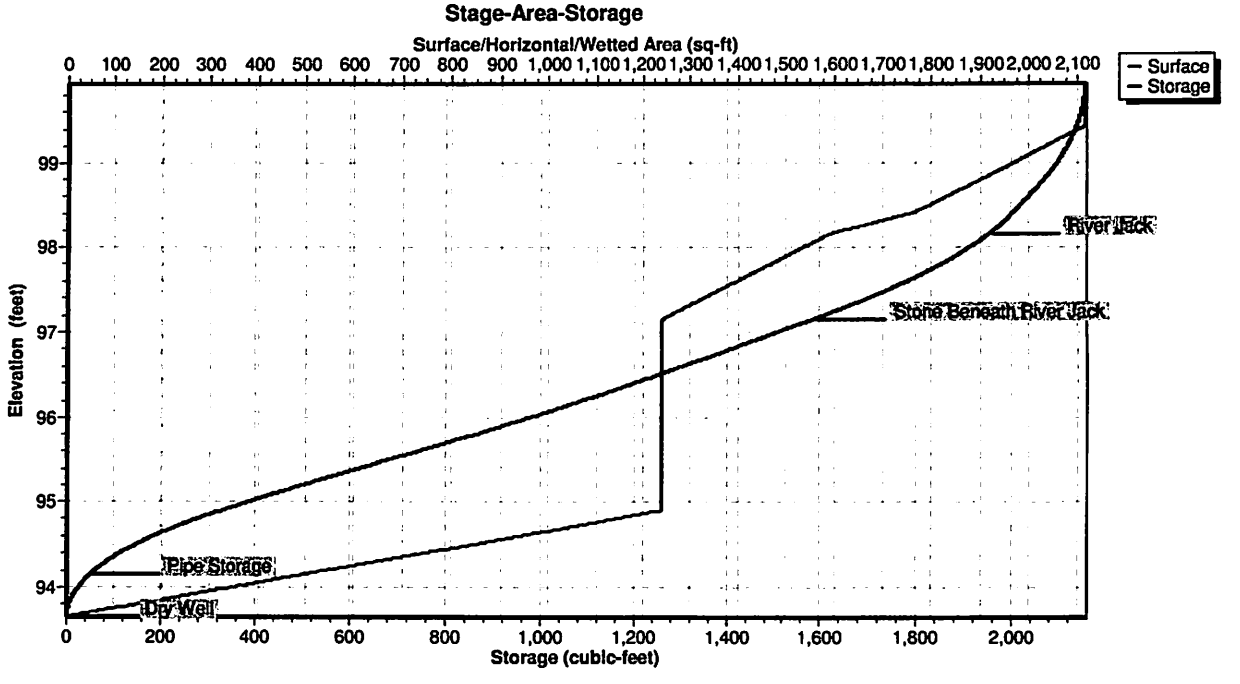

This report was prepared with the free HydroCAD SAMPLER, which is licensed for evaluation and educational use ONLY. For actual design or modeling applications you MUST use a full version of HydroCAD which may be purchased at www.hydrocad.net. Full programs also include complete technical support,training materials, and additional features which are essential for actual design work.

Time span=0.00-3.00 hrs, dt=0.01 hrs, 301 points
Runoff by Rational method, Rise/Fall=1.0/1.0 xTc
Reach routing by Stor-Ind+Trans method - Pond routing by Stor-Ind method

Subcatchment BY-1: BYPASS AREA 1 Runoff Area=7.660 ac 9.14% Impervious Runoff Depth=0.04"
Flow Length=865' Tc=25.7 min C=0.37 Runoff=3.41 cfs 0.024 af

Subcatchment PRE-1: EXISTING Runoff Area=11.300 ac 16.64% Impervious Runoff Depth=0.05"
Flow Length=865' Tc=25.7 min C=0.49 Runoff=6.67 cfs 0.048 af

Subcatchment TRIB-1: TRIBUTARY AREA 1 Runoff Area=3.640 ac 70.88% Impervious Runoff Depth=0.10"
Tc=20.9 min C=0.76 Runoff=4.10 cfs 0.029 af

Reach POA: POA-1 Inflow=6.13 cfs 0.052 af
Outflow=6.13 cfs 0.052 af

Pond DW-1: DRY WELL Peak Elev=95.11' Storage=445 cf Inflow=4.10 cfs 0.029 af
Discarded=0.01 cfs 0.001 af Primary=3.12 cfs 0.028 af Outflow=3.13 cfs 0.028 af

Total Runoff Area = 22.600 ac Runoff Volume = 0.101 af Average Runoff Depth = 0.05"
77.17% Pervious = 17.440 ac 22.83% Impervious = 5.160 ac

This report was prepared with the free HydroCAD SAMPLER, which is licensed for evaluation and educational use ONLY. For actual design or modeling applications you MUST use a full version of HydroCAD which may be purchased at www.hydrocad.net. Full programs also include complete technical support,training materials, and additional features which are essential for actual design work.

Summary for Subcatchment BY-1: BYPASS AREA 1

Runoff = 3.41 cfs @ 0.08 hrs, Volume= 0.024 af, Depth= 0.04"

Runoff by Rational method, Rise/Fall=1.0/1.0 xTc, Time Span= 0.00-3.00 hrs, dt= 0.01 hrs
Bensalem 10-Year Duration=5 min, Inten=6.36 in/hr

Area (ac)	C	Description
0.700	0.96	Impervious
2.280	0.40	Meadow, Good Condition, HSG D
4.680	0.27	Open Space, Good Condition, HSG D
7.660	0.37	Weighted Average
6.960		90.86% Pervious Area
0.700		9.14% Impervious Area

Tc (min)	Length (feet)	Slope (ft/ft)	Velocity (ft/sec)	Capacity (cfs)	Description
19.6	150	0.0200	0.13		**Sheet Flow, Sheet Flow**
					Grass: Dense n= 0.240 P2= 3.26"
1.9	404	0.0500	3.60		**Shallow Concentrated Flow, Shallow Flow**
					Unpaved Kv= 16.1 fps
4.2	311	0.0240	1.23	396.32	**Channel Flow, Channel Flow**
					Area= 321.5 sf Perim= 157.9' r= 2.04' n= 0.300
25.7	865	Total			

This report was prepared with the free HydroCAD SAMPLER, which is licensed for evaluation and educational use ONLY. For actual design or modeling applications you MUST use a full version of HydroCAD which may be purchased at www.hydrocad.net. Full programs also include complete technical support,training materials, and additional features which are essential for actual design work.

Subcatchment BY-1: BYPASS AREA 1

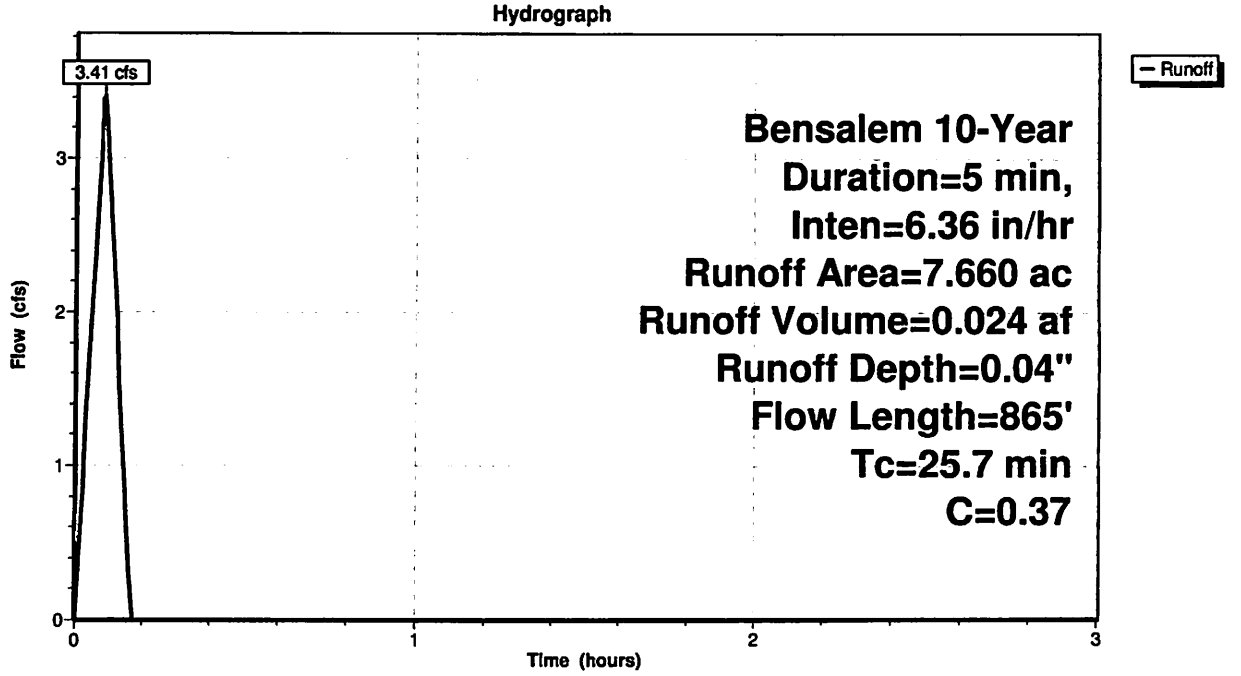

This report was prepared with the free HydroCAD SAMPLER, which is licensed for evaluation and educational use ONLY. For actual design or modeling applications you MUST use a full version of HydroCAD which may be purchased at www.hydrocad.net. Full programs also include complete technical support,training materials, and additional features which are essential for actual design work.

Summary for Subcatchment PRE-1: EXISTING

Runoff = 6.67 cfs @ 0.08 hrs, Volume= 0.048 af, Depth= 0.05"

Runoff by Rational method, Rise/Fall=1.0/1.0 xTc, Time Span= 0.00-3.00 hrs, dt= 0.01 hrs
Bensalem 10-Year Duration=5 min, Inten=6.36 in/hr

Area (ac)	C	Description
1.880	0.96	Impervious
8.950	0.40	Meadow, Good Condition, HSG D
0.470	0.40	20% Impervious, Meadow Good Condition, HSG D
11.300	0.49	Weighted Average
9.420		83.36% Pervious Area
1.880		16.64% Impervious Area

Tc (min)	Length (feet)	Slope (ft/ft)	Velocity (ft/sec)	Capacity (cfs)	Description
19.6	150	0.0200	0.13		**Sheet Flow, Sheet Flow** Grass: Dense n= 0.240 P2= 3.26"
1.2	240	0.0400	3.22		**Shallow Concentrated Flow, Shallow Flow** Unpaved Kv= 16.1 fps
0.1	16	0.0100	2.03		**Shallow Concentrated Flow, Shallow Flow** Paved Kv= 20.3 fps
0.6	148	0.0690	4.23		**Shallow Concentrated Flow, Shallow Flow** Unpaved Kv= 16.1 fps
4.2	311	0.0240	1.23	396.32	**Channel Flow, Channel Flow** Area= 321.5 sf Perim= 157.9' r= 2.04' n= 0.300
25.7	865	Total			

This report was prepared with the free HydroCAD SAMPLER, which is licensed for evaluation and educational use ONLY. For actual design or modeling applications you MUST use a full version of HydroCAD which may be purchased at www.hydrocad.net. Full programs also include complete technical support,training materials, and additional features which are essential for actual design work.

Subcatchment PRE-1: EXISTING

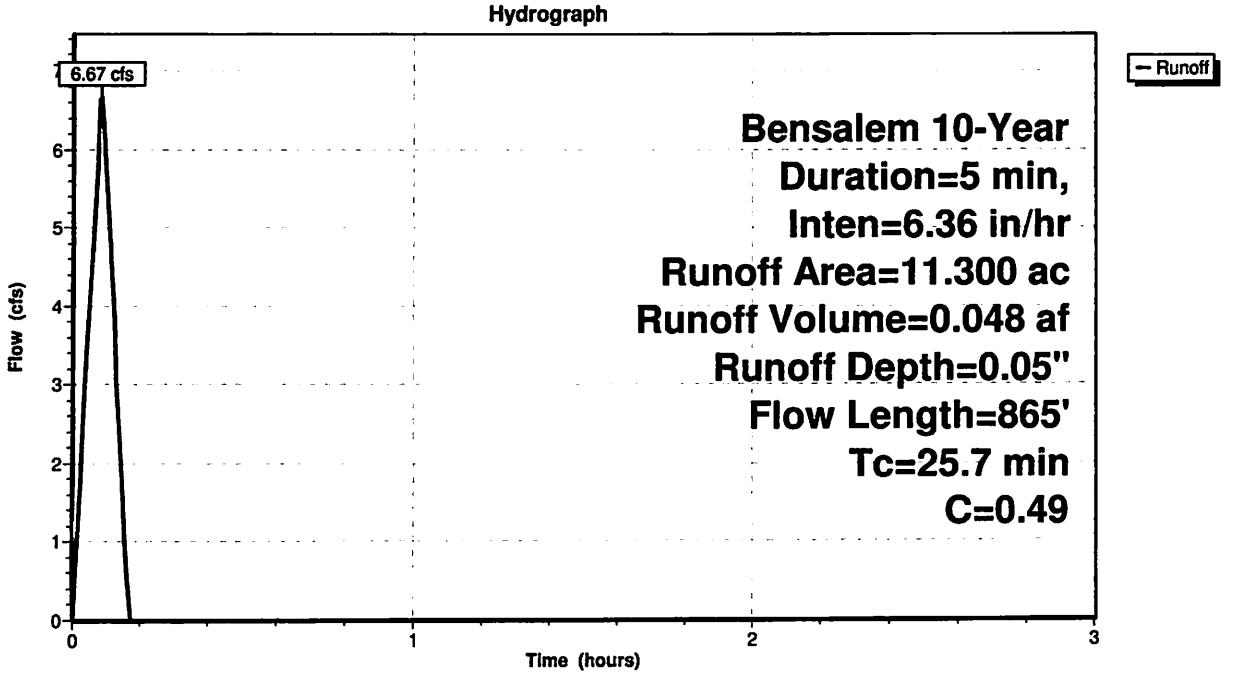

This report was prepared with the free HydroCAD SAMPLER, which is licensed for evaluation and educational use ONLY. For actual design or modeling applications you MUST use a full version of HydroCAD which may be purchased at www.hydrocad.net. Full programs also include complete technical support,training materials, and additional features which are essential for actual design work.

Summary for Subcatchment TRIB-1: TRIBUTARY AREA 1

Runoff = 4.10 cfs @ 0.08 hrs, Volume= 0.029 af, Depth= 0.10"

Runoff by Rational method, Rise/Fall=1.0/1.0 xTc, Time Span= 0.00-3.00 hrs, dt= 0.01 hrs
Bensalem 10-Year Duration=5 min, Inten=6.36 in/hr

Area (ac)	C	Description
2.580	0.96	Impervious
1.060	0.27	Open Space, Good Condition, HSG D
3.640	0.76	Weighted Average
1.060		29.12% Pervious Area
2.580		70.88% Impervious Area

Tc (min)	Length (feet)	Slope (ft/ft)	Velocity (ft/sec)	Capacity (cfs)	Description
20.9					**Direct Entry, Storm Sewers Tab**

Subcatchment TRIB-1: TRIBUTARY AREA 1

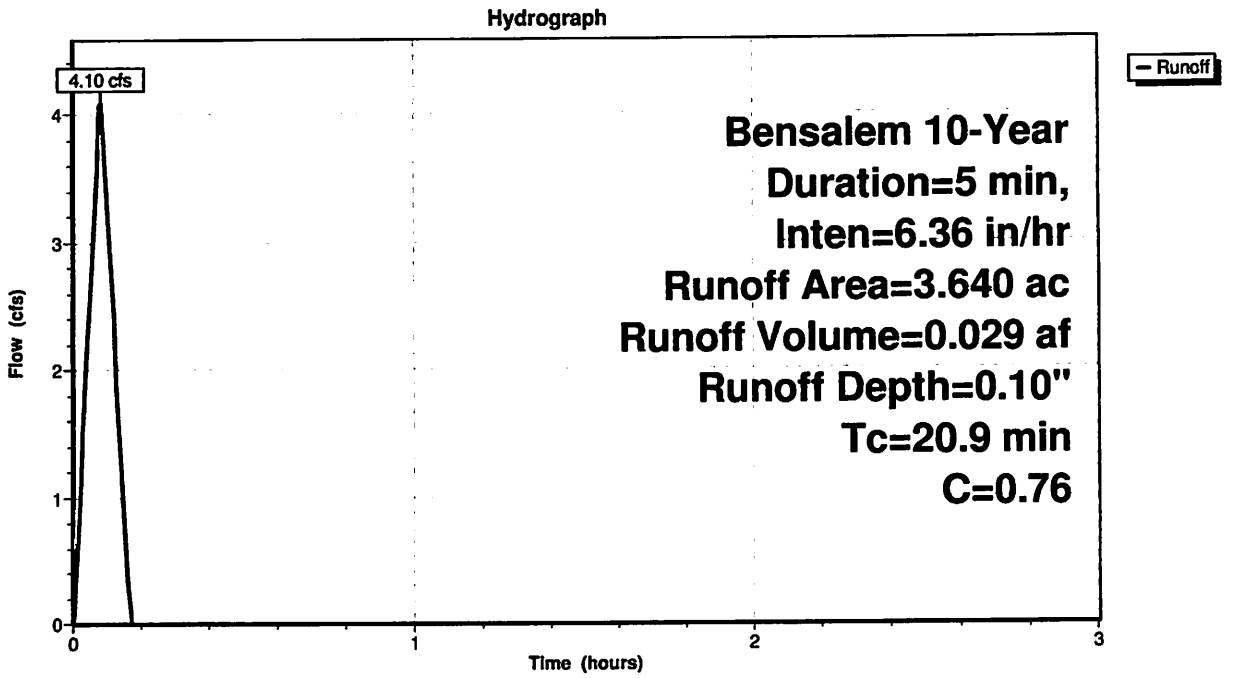

This report was prepared with the free HydroCAD SAMPLER, which is licensed for evaluation and educational use ONLY. For actual design or modeling applications you MUST use a full version of HydroCAD which may be purchased at www.hydrocad.net. Full programs also include complete technical support,training materials, and additional features which are essential for actual design work.

Summary for Reach POA: POA-1

Inflow Area = 11.300 ac, 29.03% Impervious, Inflow Depth = 0.06" for 10-Year event
Inflow = 6.13 cfs @ 0.09 hrs, Volume= 0.052 af
Outflow = 6.13 cfs @ 0.09 hrs, Volume= 0.052 af, Atten= 0%, Lag= 0.0 min

Routing by Stor-Ind+Trans method, Time Span= 0.00-3.00 hrs, dt= 0.01 hrs

Reach POA: POA-1

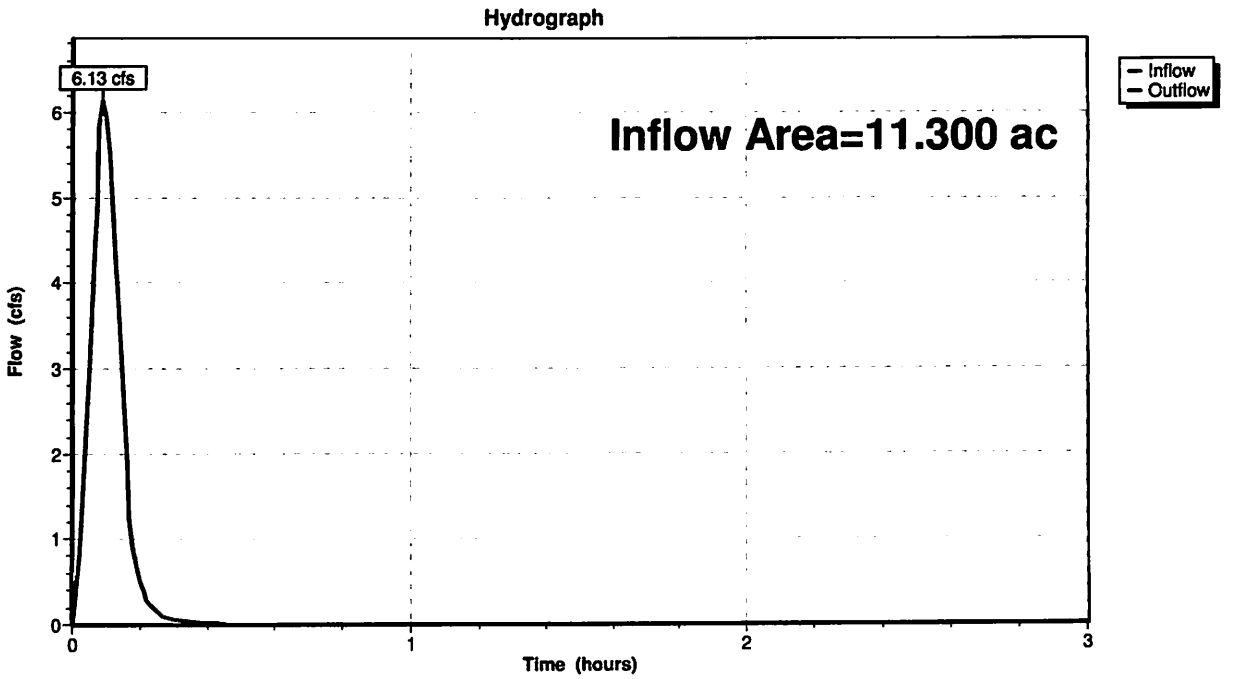

This report was prepared with the free HydroCAD SAMPLER, which is licensed for evaluation and educational use ONLY. For actual design or modeling applications you MUST use a full version of HydroCAD which may be purchased at www.hydrocad.net. Full programs also include complete technical support,training materials, and additional features which are essential for actual design work.

Summary for Pond DW-1: DRY WELL

Inflow Area = 3.640 ac, 70.88% Impervious, Inflow Depth = 0.10" for 10-Year event
Inflow = 4.10 cfs @ 0.08 hrs, Volume= 0.029 af
Outflow = 3.13 cfs @ 0.11 hrs, Volume= 0.028 af, Atten= 24%, Lag= 1.4 min
Discarded = 0.01 cfs @ 0.08 hrs, Volume= 0.001 af
Primary = 3.12 cfs @ 0.11 hrs, Volume= 0.028 af

Routing by Stor-Ind method, Time Span= 0.00-3.00 hrs, dt= 0.01 hrs
Peak Elev= 95.11' @ 0.11 hrs Surf.Area= 1,241 sf Storage= 445 cf

Plug-Flow detention time= 4.5 min calculated for 0.028 af (98% of inflow)
Center-of-Mass det. time= 4.4 min (9.4 - 5.0)

Volume	Invert	Avail.Storage	Storage Description
#1	93.65'	1,634 cf	**102.0" W x 42.0" H Box Dry Well** L= 146.0' S= 0.0086 '/' 4,344 cf Overall - 258 cf Embedded = 4,085 cf x 40.0% Voids
#2	94.15'	258 cf	**18.0" Round Pipe Storage** Inside #1 L= 146.0' S= 0.0086 '/'
#3	97.16'	175 cf	**36.0" W x 12.0" H Box Stone Beneath River Jack** L= 146.0' S= 0.0086 '/' 438 cf Overall x 40.0% Voids
#4	98.17'	88 cf	**36.0" W x 6.0" H Box River Jack** L= 146.0' S= 0.0086 '/' 219 cf Overall x 40.0% Voids
		2,155 cf	Total Available Storage

Device	Routing	Invert	Outlet Devices
#1	Discarded	93.65'	**0.250 in/hr Exfiltration over Surface area**
#2	Primary	94.15'	**18.0" Round Culvert** L= 49.0' CPP, projecting, no headwall, Ke= 0.900 Inlet / Outlet Invert= 94.15' / 93.35' S= 0.0163 '/' Cc= 0.900 n= 0.013 Corrugated PE, smooth interior, Flow Area= 1.77 sf

Discarded OutFlow Max=0.01 cfs @ 0.08 hrs HW=94.98' (Free Discharge)
↑**1=Exfiltration** (Exfiltration Controls 0.01 cfs)

Primary OutFlow Max=3.10 cfs @ 0.11 hrs HW=95.10' (Free Discharge)
↑**2=Culvert** (Inlet Controls 3.10 cfs @ 2.62 fps)

This report was prepared with the free HydroCAD SAMPLER, which is licensed for evaluation and educational use ONLY. For actual design or modeling applications you MUST use a full version of HydroCAD which may be purchased at www.hydrocad.net. Full programs also include complete technical support,training materials, and additional features which are essential for actual design work.

Pond DW-1: DRY WELL

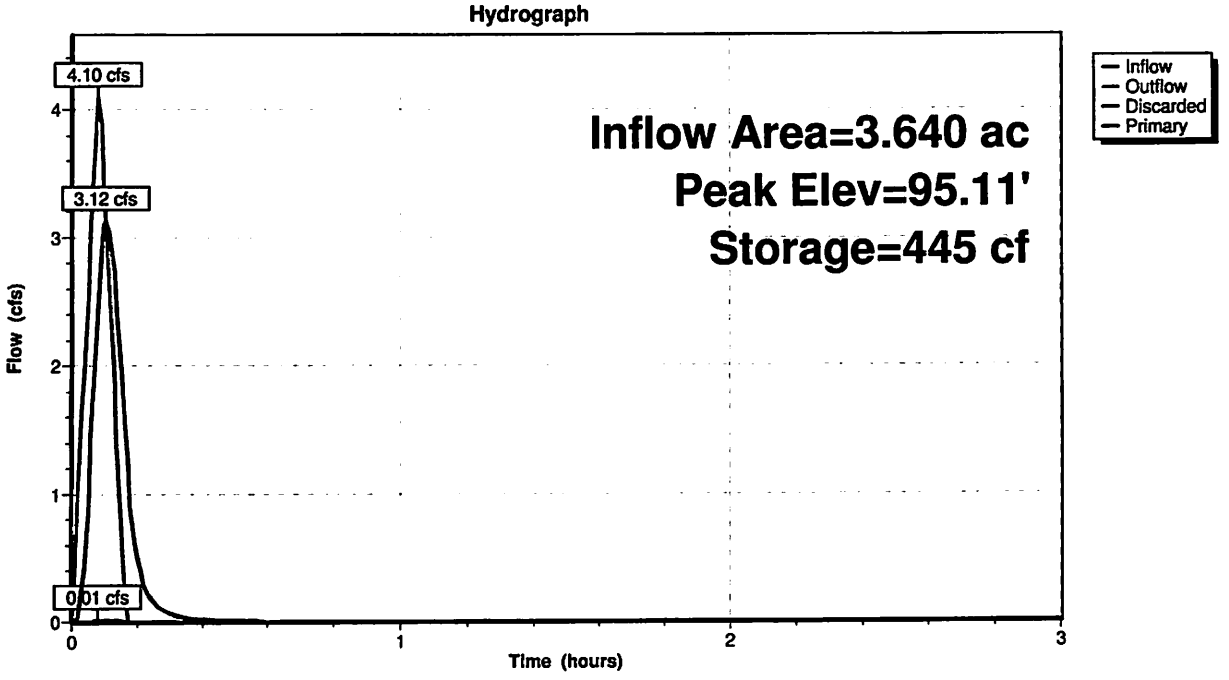

This report was prepared with the free HydroCAD SAMPLER, which is licensed for evaluation and educational use ONLY. For actual design or modeling applications you MUST use a full version of HydroCAD which may be purchased at www.hydrocad.net. Full programs also include complete technical support,training materials, and additional features which are essential for actual design work.

Pond DW-1: DRY WELL

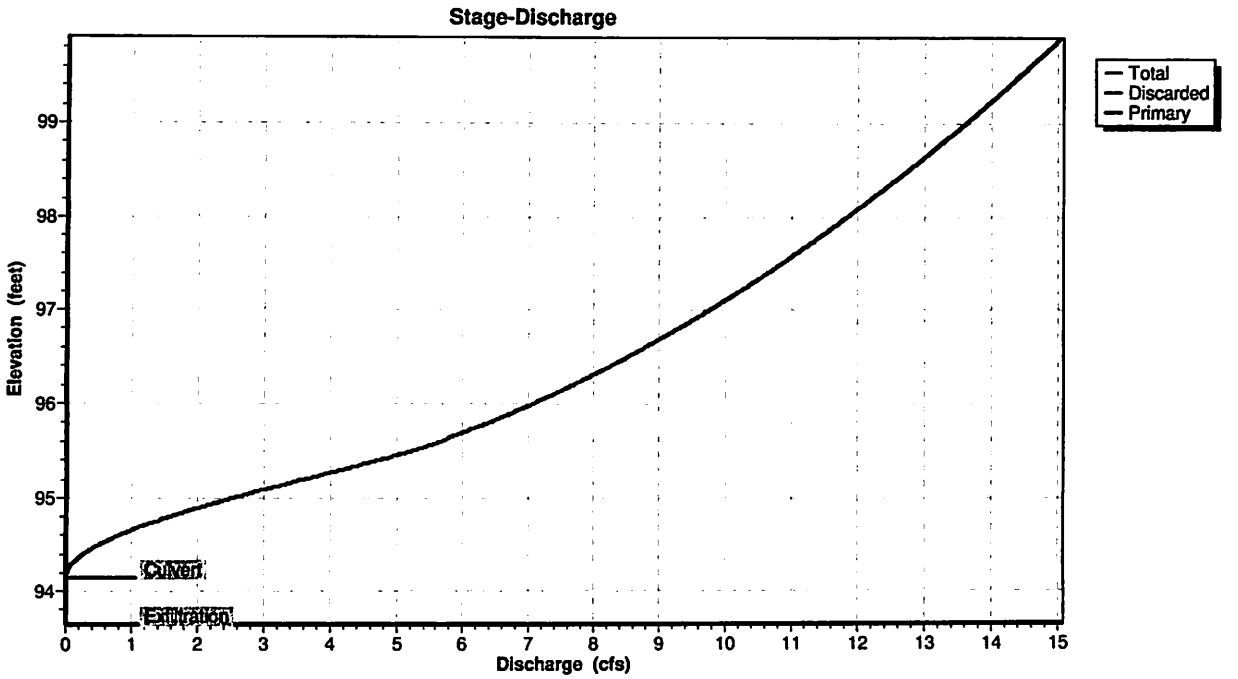

This report was prepared with the free HydroCAD SAMPLER, which is licensed for evaluation and educational use ONLY. For actual design or modeling applications you MUST use a full version of HydroCAD which may be purchased at www.hydrocad.net. Full programs also include complete technical support,training materials, and additional features which are essential for actual design work.

Pond DW-1: DRY WELL

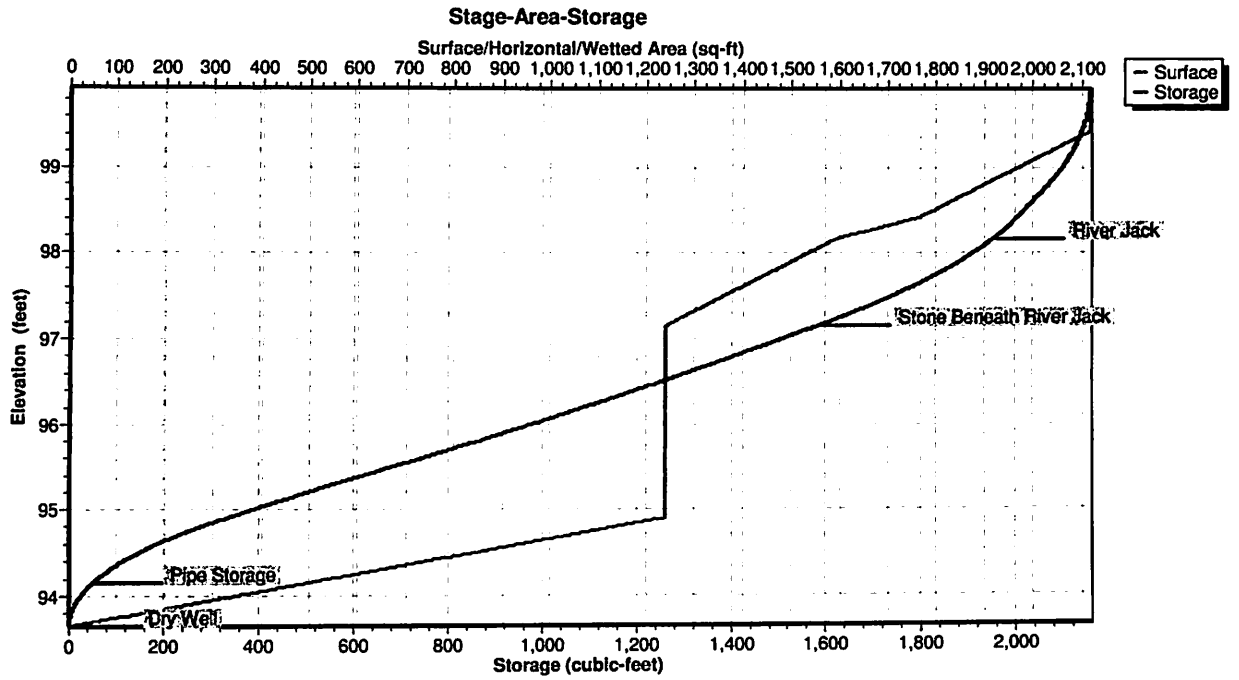

This report was prepared with the free HydroCAD SAMPLER, which is licensed for evaluation and educational use ONLY. For actual design or modeling applications you MUST use a full version of HydroCAD which may be purchased at www.hydrocad.net. Full programs also include complete technical support,training materials, and additional features which are essential for actual design work.

Time span=0.00-3.00 hrs, dt=0.01 hrs, 301 points
Runoff by Rational method, Rise/Fall=1.0/1.0 xTc
Reach routing by Stor-Ind+Trans method - Pond routing by Stor-Ind method

Subcatchment BY-1: BYPASS AREA 1 Runoff Area=7.660 ac 9.14% Impervious Runoff Depth=0.04"
Flow Length=865' Tc=25.7 min C=0.37 Runoff=3.80 cfs 0.027 af

Subcatchment PRE-1: EXISTING Runoff Area=11.300 ac 16.64% Impervious Runoff Depth=0.06"
Flow Length=865' Tc=25.7 min C=0.49 Runoff=7.42 cfs 0.053 af

Subcatchment TRIB-1: TRIBUTARY AREA 1 Runoff Area=3.640 ac 70.88% Impervious Runoff Depth=0.11"
Tc=20.9 min C=0.76 Runoff=4.56 cfs 0.032 af

Reach POA: POA-1 Inflow=6.86 cfs 0.058 af
Outflow=6.86 cfs 0.058 af

Pond DW-1: DRY WELL Peak Elev=95.17' Storage=485 cf Inflow=4.56 cfs 0.032 af
Discarded=0.01 cfs 0.001 af Primary=3.50 cfs 0.031 af Outflow=3.50 cfs 0.032 af

Total Runoff Area = 22.600 ac Runoff Volume = 0.112 af Average Runoff Depth = 0.06"
77.17% Pervious = 17.440 ac 22.83% Impervious = 5.160 ac

This report was prepared with the free HydroCAD SAMPLER, which is licensed for evaluation and educational use ONLY. For actual design or modeling applications you MUST use a full version of HydroCAD which may be purchased at www.hydrocad.net. Full programs also include complete technical support,training materials, and additional features which are essential for actual design work.

Summary for Subcatchment BY-1: BYPASS AREA 1

Runoff = 3.80 cfs @ 0.08 hrs, Volume= 0.027 af, Depth= 0.04"

Runoff by Rational method, Rise/Fall=1.0/1.0 xTc, Time Span= 0.00-3.00 hrs, dt= 0.01 hrs
Bensalem 25-Year Duration=5 min, Inten=7.08 in/hr

Area (ac)	C	Description
0.700	0.96	Impervious
2.280	0.40	Meadow, Good Condition, HSG D
4.680	0.27	Open Space, Good Condition, HSG D
7.660	0.37	Weighted Average
6.960		90.86% Pervious Area
0.700		9.14% Impervious Area

Tc (min)	Length (feet)	Slope (ft/ft)	Velocity (ft/sec)	Capacity (cfs)	Description
19.6	150	0.0200	0.13		**Sheet Flow, Sheet Flow** Grass: Dense n= 0.240 P2= 3.26"
1.9	404	0.0500	3.60		**Shallow Concentrated Flow, Shallow Flow** Unpaved Kv= 16.1 fps
4.2	311	0.0240	1.23	396.32	**Channel Flow, Channel Flow** Area= 321.5 sf Perim= 157.9' r= 2.04' n= 0.300
25.7	865	Total			

This report was prepared with the free HydroCAD SAMPLER, which is licensed for evaluation and educational use ONLY. For actual design or modeling applications you MUST use a full version of HydroCAD which may be purchased at www.hydrocad.net. Full programs also include complete technical support,training materials, and additional features which are essential for actual design work.

Subcatchment BY-1: BYPASS AREA 1

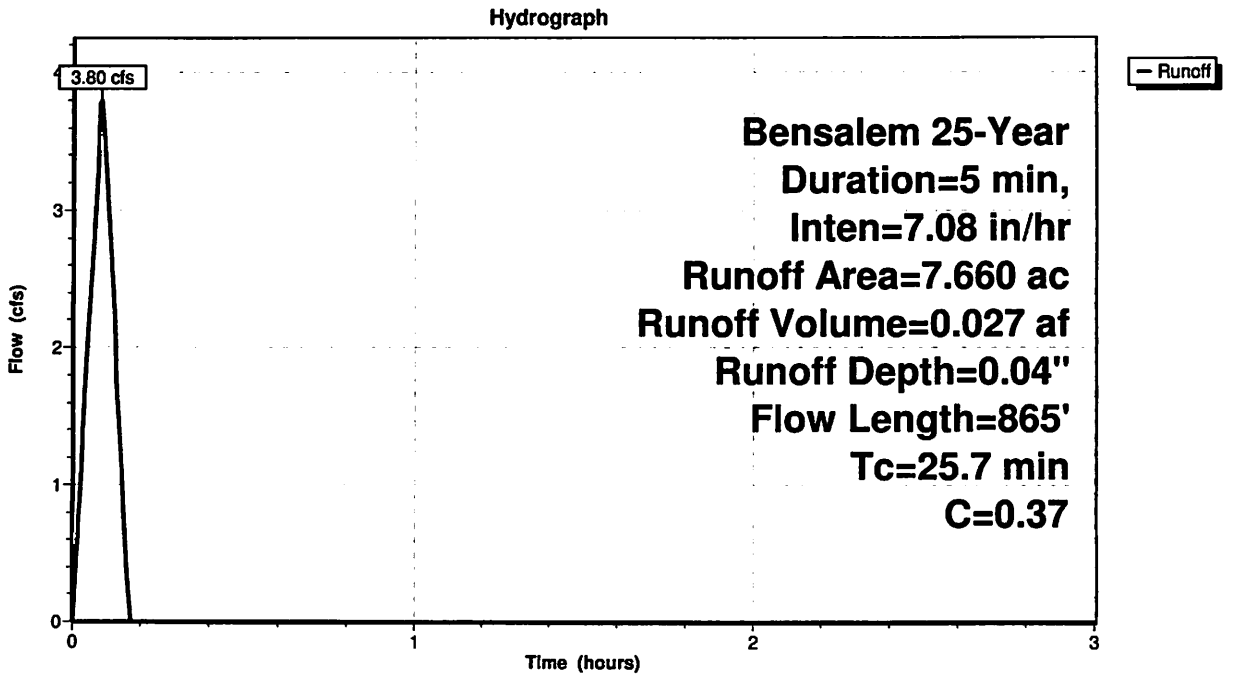

This report was prepared with the free HydroCAD SAMPLER, which is licensed for evaluation and educational use ONLY. For actual design or modeling applications you MUST use a full version of HydroCAD which may be purchased at www.hydrocad.net. Full programs also include complete technical support,training materials, and additional features which are essential for actual design work.

Summary for Subcatchment PRE-1: EXISTING

Runoff = 7.42 cfs @ 0.08 hrs, Volume= 0.053 af, Depth= 0.06"

Runoff by Rational method, Rise/Fall=1.0/1.0 xTc, Time Span= 0.00-3.00 hrs, dt= 0.01 hrs
Bensalem 25-Year Duration=5 min, Inten=7.08 in/hr

Area (ac)	C	Description
1.880	0.96	Impervious
8.950	0.40	Meadow, Good Condition, HSG D
0.470	0.40	20% Impervious, Meadow Good Condition, HSG D
11.300	0.49	Weighted Average
9.420		83.36% Pervious Area
1.880		16.64% Impervious Area

Tc (min)	Length (feet)	Slope (ft/ft)	Velocity (ft/sec)	Capacity (cfs)	Description
19.6	150	0.0200	0.13		**Sheet Flow, Sheet Flow** Grass: Dense n= 0.240 P2= 3.26"
1.2	240	0.0400	3.22		**Shallow Concentrated Flow, Shallow Flow** Unpaved Kv= 16.1 fps
0.1	16	0.0100	2.03		**Shallow Concentrated Flow, Shallow Flow** Paved Kv= 20.3 fps
0.6	148	0.0690	4.23		**Shallow Concentrated Flow, Shallow Flow** Unpaved Kv= 16.1 fps
4.2	311	0.0240	1.23	396.32	**Channel Flow, Channel Flow** Area= 321.5 sf Perim= 157.9' r= 2.04' n= 0.300
25.7	865	Total			

This report was prepared with the free HydroCAD SAMPLER, which is licensed for evaluation and educational use ONLY. For actual design or modeling applications you MUST use a full version of HydroCAD which may be purchased at www.hydrocad.net. Full programs also include complete technical support,training materials, and additional features which are essential for actual design work.

Subcatchment PRE-1: EXISTING

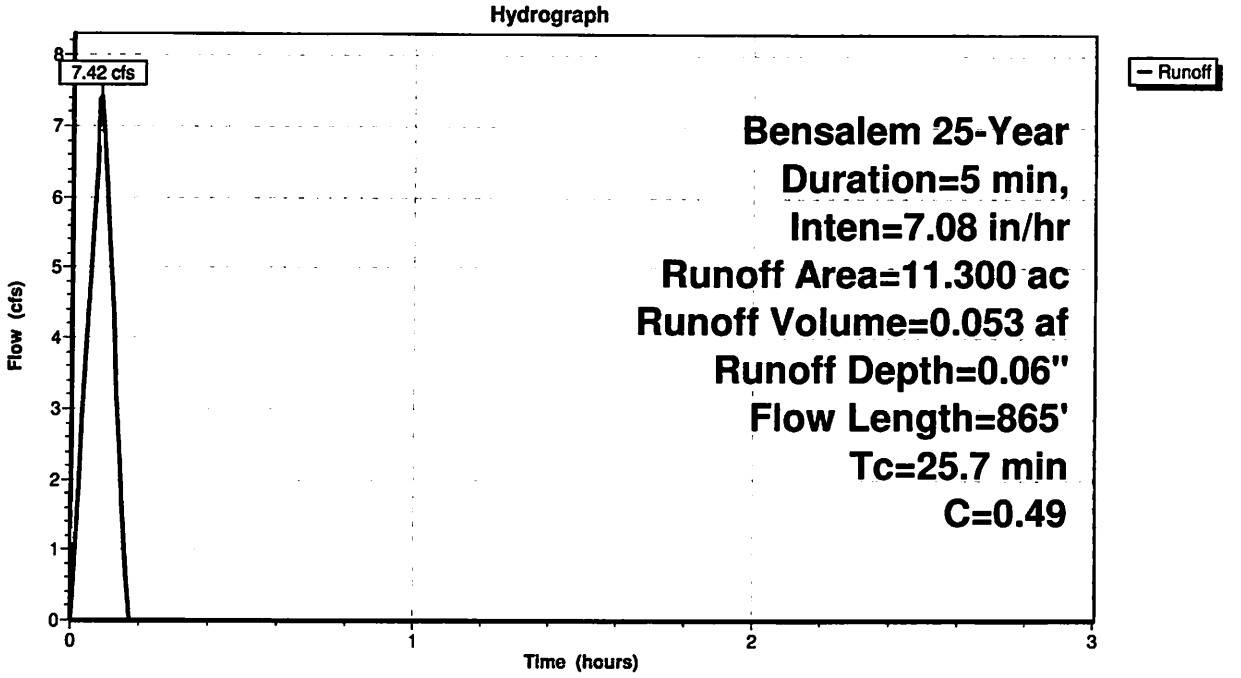

This report was prepared with the free HydroCAD SAMPLER, which is licensed for evaluation and educational use ONLY. For actual design or modeling applications you MUST use a full version of HydroCAD which may be purchased at www.hydrocad.net. Full programs also include complete technical support,training materials, and additional features which are essential for actual design work.

Summary for Subcatchment TRIB-1: TRIBUTARY AREA 1

Runoff = 4.56 cfs @ 0.08 hrs, Volume= 0.032 af, Depth= 0.11"

Runoff by Rational method, Rise/Fall=1.0/1.0 xTc, Time Span= 0.00-3.00 hrs, dt= 0.01 hrs
Bensalem 25-Year Duration=5 min, Inten=7.08 in/hr

Area (ac)	C	Description
2.580	0.96	Impervious
1.060	0.27	Open Space, Good Condition, HSG D
3.640	0.76	Weighted Average
1.060		29.12% Pervious Area
2.580		70.88% Impervious Area

Tc (min)	Length (feet)	Slope (ft/ft)	Velocity (ft/sec)	Capacity (cfs)	Description
20.9					**Direct Entry, Storm Sewers Tab**

Subcatchment TRIB-1: TRIBUTARY AREA 1

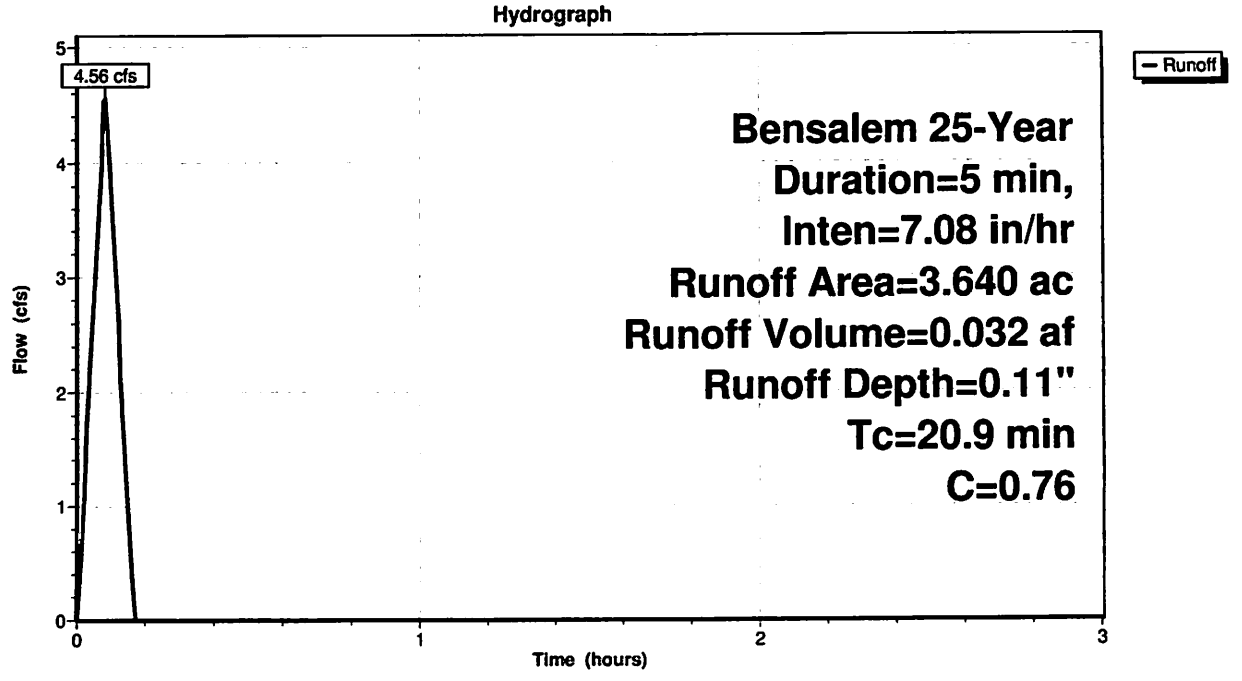

This report was prepared with the free HydroCAD SAMPLER, which is licensed for evaluation and educational use ONLY. For actual design or modeling applications you MUST use a full version of HydroCAD which may be purchased at www.hydrocad.net. Full programs also include complete technical support,training materials, and additional features which are essential for actual design work.

Summary for Reach POA: POA-1

Inflow Area = 11.300 ac, 29.03% Impervious, Inflow Depth = 0.06" for 25-Year event
Inflow = 6.86 cfs @ 0.09 hrs, Volume= 0.058 af
Outflow = 6.86 cfs @ 0.09 hrs, Volume= 0.058 af, Atten= 0%, Lag= 0.0 min

Routing by Stor-Ind+Trans method, Time Span= 0.00-3.00 hrs, dt= 0.01 hrs

Reach POA: POA-1

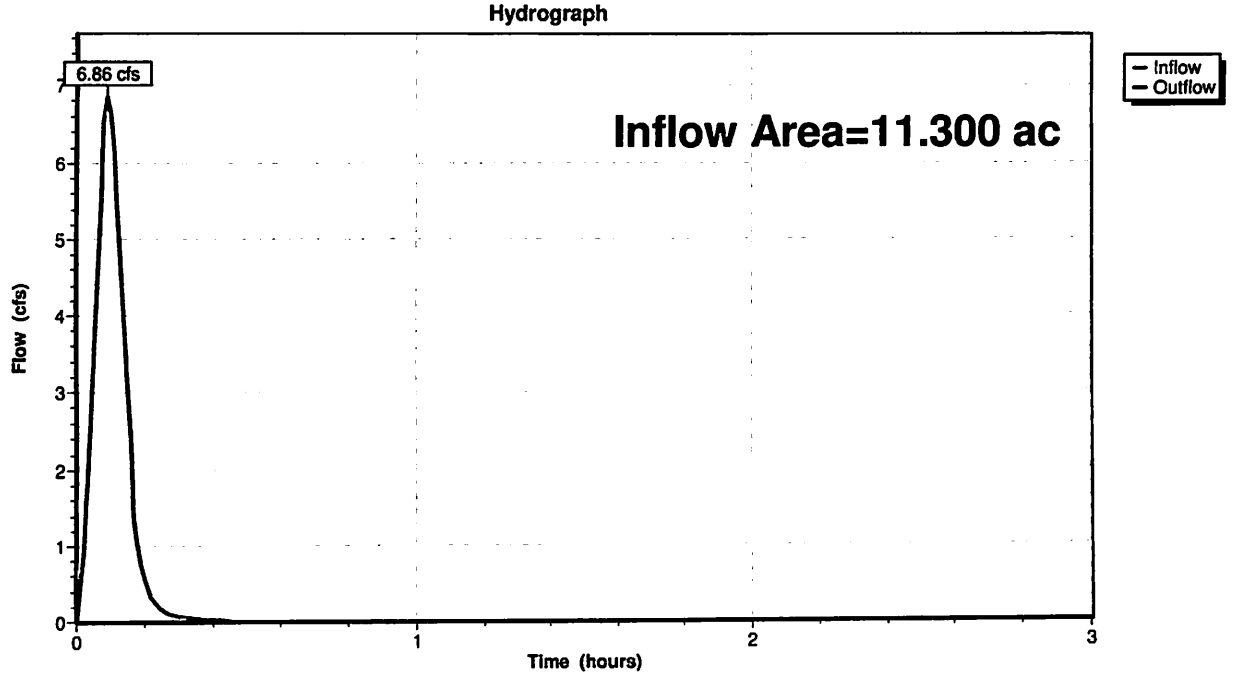

This report was prepared with the free HydroCAD SAMPLER, which is licensed for evaluation and educational use ONLY. For actual design or modeling applications you MUST use a full version of HydroCAD which may be purchased at www.hydrocad.net. Full programs also include complete technical support,training materials, and additional features which are essential for actual design work.

Summary for Pond DW-1: DRY WELL

Inflow Area = 3.640 ac, 70.88% Impervious, Inflow Depth = 0.11" for 25-Year event
Inflow = 4.56 cfs @ 0.08 hrs, Volume= 0.032 af
Outflow = 3.50 cfs @ 0.11 hrs, Volume= 0.032 af, Atten= 23%, Lag= 1.4 min
Discarded = 0.01 cfs @ 0.07 hrs, Volume= 0.001 af
Primary = 3.50 cfs @ 0.11 hrs, Volume= 0.031 af

Routing by Stor-Ind method, Time Span= 0.00-3.00 hrs, dt= 0.01 hrs
Peak Elev= 95.17' @ 0.11 hrs Surf.Area= 1,241 sf Storage= 485 cf

Plug-Flow detention time= 3.7 min calculated for 0.032 af (97% of inflow)
Center-of-Mass det. time= 4.1 min (9.1 - 5.0)

Volume	Invert	Avail.Storage	Storage Description
#1	93.65'	1,634 cf	**102.0" W x 42.0" H Box Dry Well** L= 146.0' S= 0.0086 '/' 4,344 cf Overall - 258 cf Embedded = 4,085 cf x 40.0% Voids
#2	94.15'	258 cf	**18.0" Round Pipe Storage** Inside #1 L= 146.0' S= 0.0086 '/'
#3	97.16'	175 cf	**36.0" W x 12.0" H Box Stone Beneath River Jack** L= 146.0' S= 0.0086 '/' 438 cf Overall x 40.0% Voids
#4	98.17'	88 cf	**36.0" W x 6.0" H Box River Jack** L= 146.0' S= 0.0086 '/' 219 cf Overall x 40.0% Voids
		2,155 cf	Total Available Storage

Device	Routing	Invert	Outlet Devices
#1	Discarded	93.65'	**0.250 in/hr Exfiltration over Surface area**
#2	Primary	94.15'	**18.0" Round Culvert** L= 49.0' CPP, projecting, no headwall, Ke= 0.900 Inlet / Outlet Invert= 94.15' / 93.35' S= 0.0163 '/' Cc= 0.900 n= 0.013 Corrugated PE, smooth interior, Flow Area= 1.77 sf

Discarded OutFlow Max=0.01 cfs @ 0.07 hrs HW=94.92' (Free Discharge)
↑—**1=Exfiltration** (Exfiltration Controls 0.01 cfs)

Primary OutFlow Max=3.48 cfs @ 0.11 hrs HW=95.17' (Free Discharge)
↑—**2=Culvert** (Inlet Controls 3.48 cfs @ 2.71 fps)

This report was prepared with the free HydroCAD SAMPLER, which is licensed for evaluation and educational use ONLY. For actual design or modeling applications you MUST use a full version of HydroCAD which may be purchased at www.hydrocad.net. Full programs also include complete technical support,training materials, and additional features which are essential for actual design work.

Pond DW-1: DRY WELL

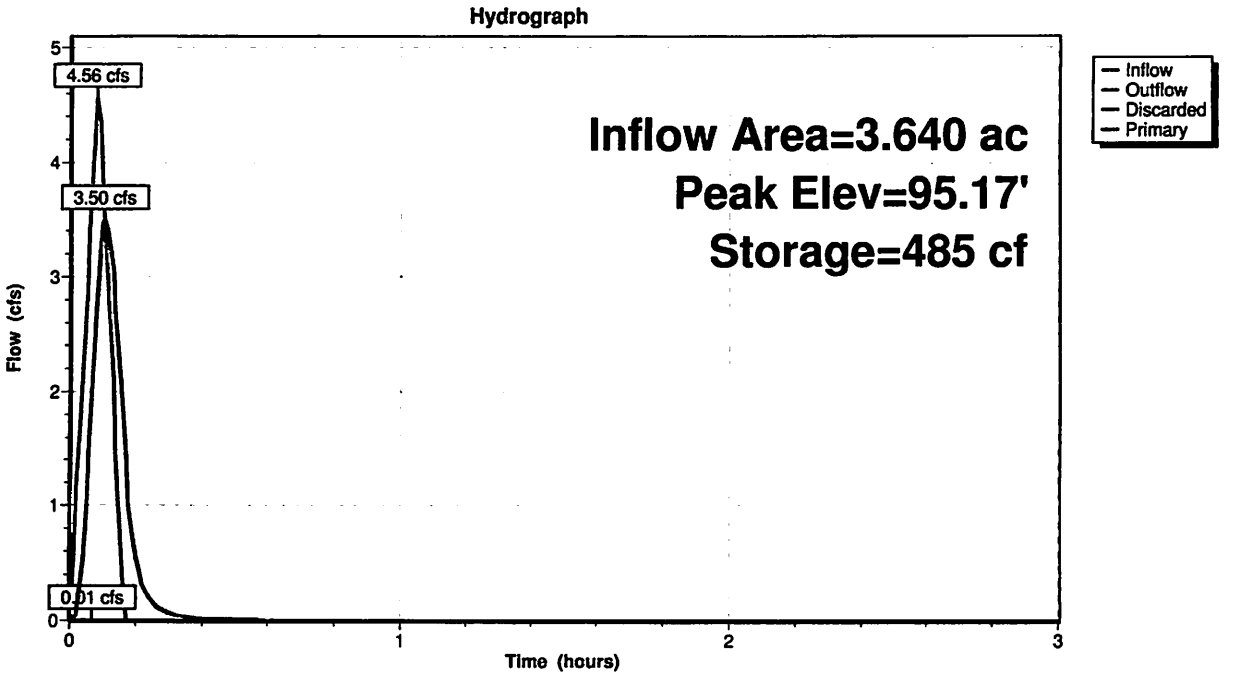

This report was prepared with the free HydroCAD SAMPLER, which is licensed for evaluation and educational use ONLY. For actual design or modeling applications you MUST use a full version of HydroCAD which may be purchased at www.hydrocad.net. Full programs also include complete technical support,training materials, and additional features which are essential for actual design work.

Pond DW-1: DRY WELL

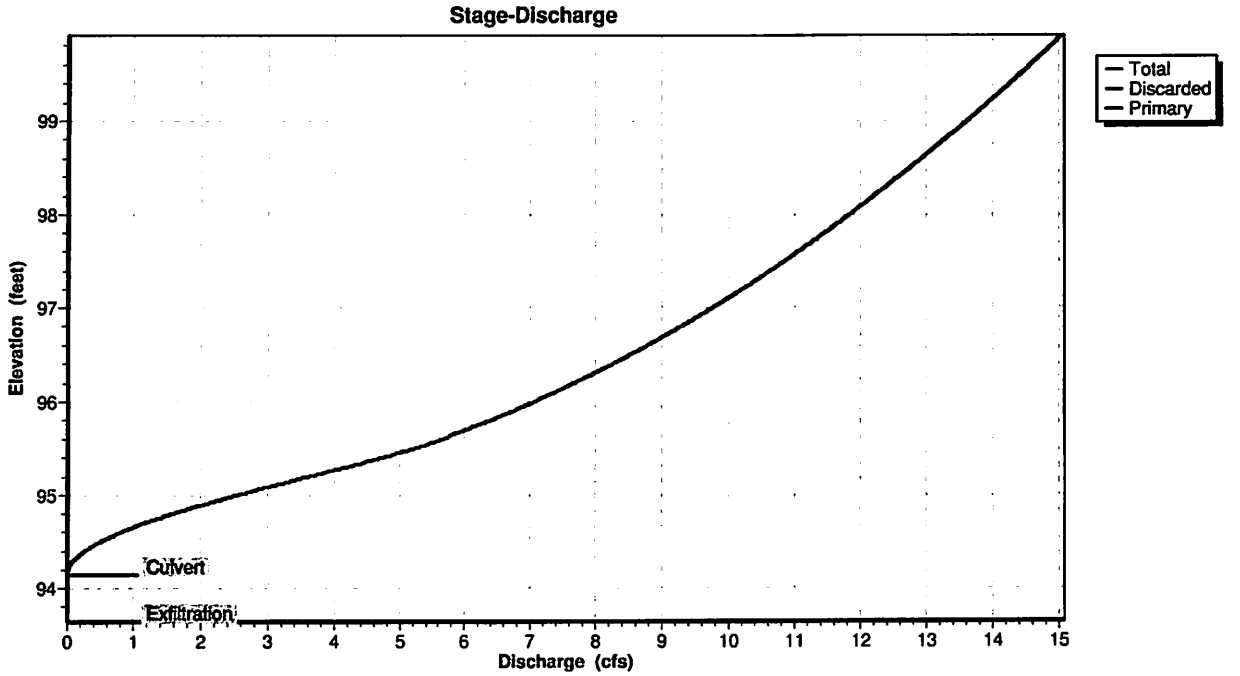

This report was prepared with the free HydroCAD SAMPLER, which is licensed for evaluation and educational use ONLY. For actual design or modeling applications you MUST use a full version of HydroCAD which may be purchased at www.hydrocad.net. Full programs also include complete technical support,training materials, and additional features which are essential for actual design work.

Pond DW-1: DRY WELL

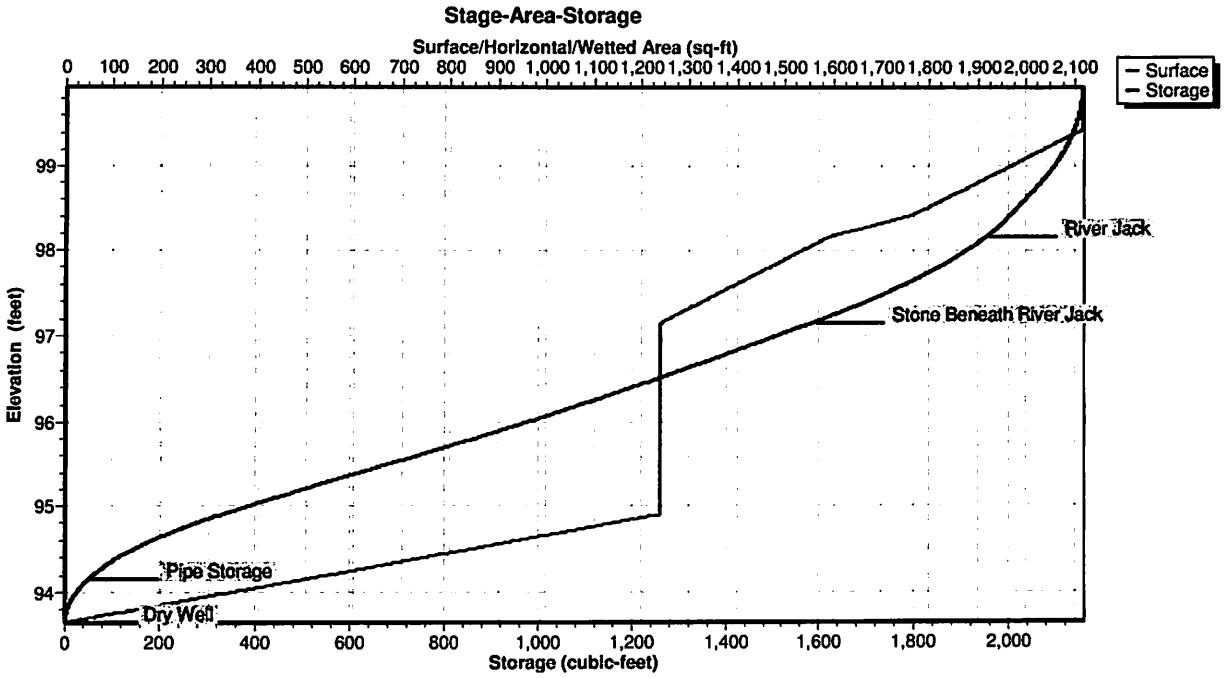

This report was prepared with the free HydroCAD SAMPLER, which is licensed for evaluation and educational use ONLY. For actual design or modeling applications you MUST use a full version of HydroCAD which may be purchased at www.hydrocad.net. Full programs also include complete technical support,training materials, and additional features which are essential for actual design work.

Time span=0.00-3.00 hrs, dt=0.01 hrs, 301 points
Runoff by Rational method, Rise/Fall=1.0/1.0 xTc
Reach routing by Stor-Ind+Trans method - Pond routing by Stor-Ind method

Subcatchment BY-1: BYPASS AREA 1 Runoff Area=7.660 ac 9.14% Impervious Runoff Depth=0.05"
Flow Length=865' Tc=25.7 min C=0.37 Runoff=4.06 cfs 0.029 af

Subcatchment PRE-1: EXISTING Runoff Area=11.300 ac 16.64% Impervious Runoff Depth=0.06"
Flow Length=865' Tc=25.7 min C=0.49 Runoff=7.92 cfs 0.056 af

Subcatchment TRIB-1: TRIBUTARY AREA 1 Runoff Area=3.640 ac 70.88% Impervious Runoff Depth=0.11"
Tc=20.9 min C=0.76 Runoff=4.87 cfs 0.035 af

Reach POA: POA-1 Inflow=7.34 cfs 0.062 af
Outflow=7.34 cfs 0.062 af

Pond DW-1: DRY WELL Peak Elev=95.22' Storage=512 cf Inflow=4.87 cfs 0.035 af
Discarded=0.01 cfs 0.001 af Primary=3.74 cfs 0.033 af Outflow=3.75 cfs 0.034 af

Total Runoff Area = 22.600 ac Runoff Volume = 0.120 af Average Runoff Depth = 0.06"
77.17% Pervious = 17.440 ac 22.83% Impervious = 5.160 ac

This report was prepared with the free HydroCAD SAMPLER, which is licensed for evaluation and educational use ONLY. For actual design or modeling applications you MUST use a full version of HydroCAD which may be purchased at www.hydrocad.net. Full programs also include complete technical support,training materials, and additional features which are essential for actual design work.

Summary for Subcatchment BY-1: BYPASS AREA 1

Runoff = 4.06 cfs @ 0.08 hrs, Volume= 0.029 af, Depth= 0.05"

Runoff by Rational method, Rise/Fall=1.0/1.0 xTc, Time Span= 0.00-3.00 hrs, dt= 0.01 hrs
Bensalem 50-Year Duration=5 min, Inten=7.56 in/hr

Area (ac)	C	Description
0.700	0.96	Impervious
2.280	0.40	Meadow, Good Condition, HSG D
4.680	0.27	Open Space, Good Condition, HSG D
7.660	0.37	Weighted Average
6.960		90.86% Pervious Area
0.700		9.14% Impervious Area

Tc (min)	Length (feet)	Slope (ft/ft)	Velocity (ft/sec)	Capacity (cfs)	Description
19.6	150	0.0200	0.13		**Sheet Flow, Sheet Flow** Grass: Dense n= 0.240 P2= 3.26"
1.9	404	0.0500	3.60		**Shallow Concentrated Flow, Shallow Flow** Unpaved Kv= 16.1 fps
4.2	311	0.0240	1.23	396.32	**Channel Flow, Channel Flow** Area= 321.5 sf Perim= 157.9' r= 2.04' n= 0.300
25.7	865	Total			

This report was prepared with the free HydroCAD SAMPLER, which is licensed for evaluation and educational use ONLY. For actual design or modeling applications you MUST use a full version of HydroCAD which may be purchased at www.hydrocad.net. Full programs also include complete technical support,training materials, and additional features which are essential for actual design work.

Subcatchment BY-1: BYPASS AREA 1

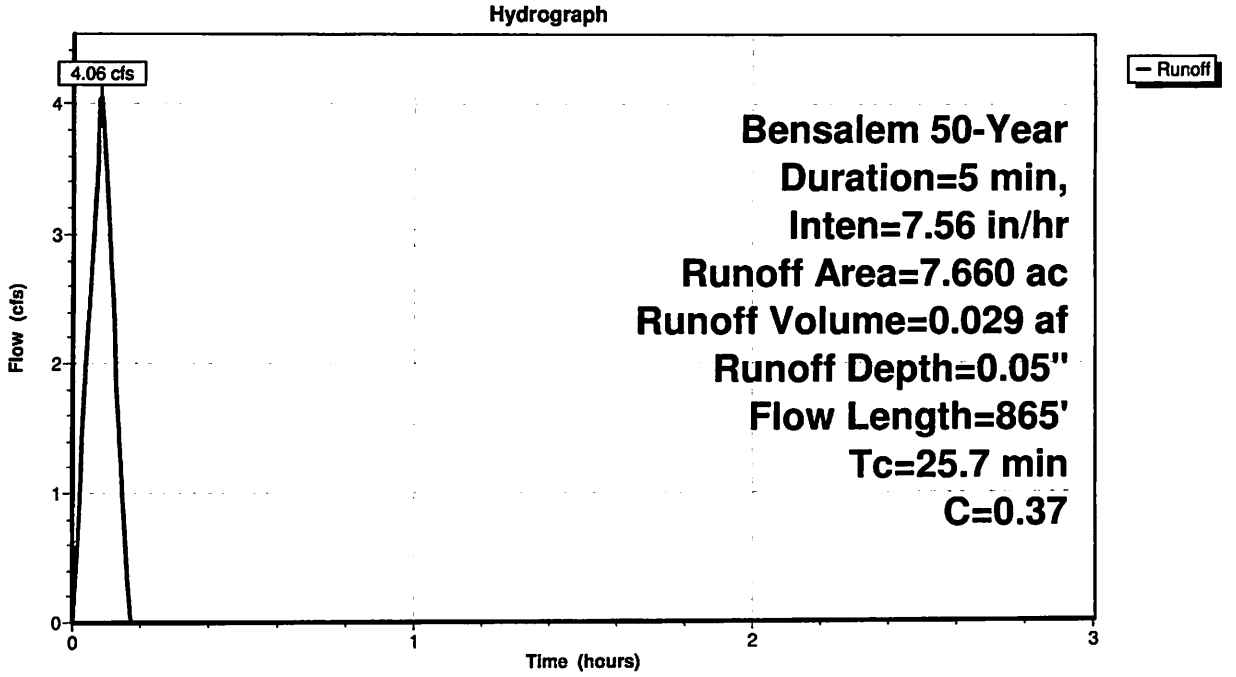

This report was prepared with the free HydroCAD SAMPLER, which is licensed for evaluation and educational use ONLY. For actual design or modeling applications you MUST use a full version of HydroCAD which may be purchased at www.hydrocad.net. Full programs also include complete technical support,training materials, and additional features which are essential for actual design work.

Summary for Subcatchment PRE-1: EXISTING

Runoff = 7.92 cfs @ 0.08 hrs, Volume= 0.056 af, Depth= 0.06"

Runoff by Rational method, Rise/Fall=1.0/1.0 xTc, Time Span= 0.00-3.00 hrs, dt= 0.01 hrs
Bensalem 50-Year Duration=5 min, Inten=7.56 in/hr

Area (ac)	C	Description
1.880	0.96	Impervious
8.950	0.40	Meadow, Good Condition, HSG D
0.470	0.40	20% Impervious, Meadow Good Condition, HSG D
11.300	0.49	Weighted Average
9.420		83.36% Pervious Area
1.880		16.64% Impervious Area

Tc (min)	Length (feet)	Slope (ft/ft)	Velocity (ft/sec)	Capacity (cfs)	Description
19.6	150	0.0200	0.13		**Sheet Flow, Sheet Flow** Grass: Dense n= 0.240 P2= 3.26"
1.2	240	0.0400	3.22		**Shallow Concentrated Flow, Shallow Flow** Unpaved Kv= 16.1 fps
0.1	16	0.0100	2.03		**Shallow Concentrated Flow, Shallow Flow** Paved Kv= 20.3 fps
0.6	148	0.0690	4.23		**Shallow Concentrated Flow, Shallow Flow** Unpaved Kv= 16.1 fps
4.2	311	0.0240	1.23	396.32	**Channel Flow, Channel Flow** Area= 321.5 sf Perim= 157.9' r= 2.04' n= 0.300
25.7	865	Total			

This report was prepared with the free HydroCAD SAMPLER, which is licensed for evaluation and educational use ONLY. For actual design or modeling applications you MUST use a full version of HydroCAD which may be purchased at www.hydrocad.net. Full programs also include complete technical support,training materials, and additional features which are essential for actual design work.

Subcatchment PRE-1: EXISTING

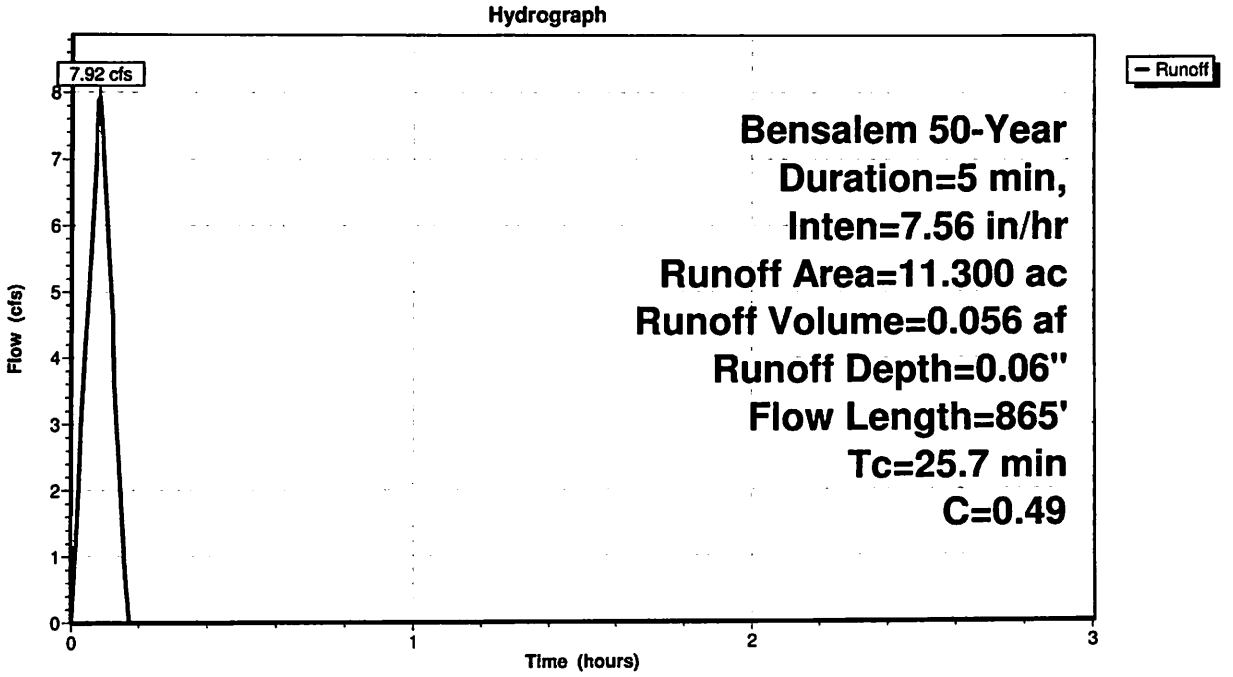

This report was prepared with the free HydroCAD SAMPLER, which is licensed for evaluation and educational use ONLY. For actual design or modeling applications you MUST use a full version of HydroCAD which may be purchased at www.hydrocad.net. Full programs also include complete technical support,training materials, and additional features which are essential for actual design work.

Summary for Subcatchment TRIB-1: TRIBUTARY AREA 1

Runoff = 4.87 cfs @ 0.08 hrs, Volume= 0.035 af, Depth= 0.11"

Runoff by Rational method, Rise/Fall=1.0/1.0 xTc, Time Span= 0.00-3.00 hrs, dt= 0.01 hrs
Bensalem 50-Year Duration=5 min, Inten=7.56 in/hr

Area (ac)	C	Description
2.580	0.96	Impervious
1.060	0.27	Open Space, Good Condition, HSG D
3.640	0.76	Weighted Average
1.060		29.12% Pervious Area
2.580		70.88% Impervious Area

Tc (min)	Length (feet)	Slope (ft/ft)	Velocity (ft/sec)	Capacity (cfs)	Description
20.9					**Direct Entry, Storm Sewers Tab**

Subcatchment TRIB-1: TRIBUTARY AREA 1

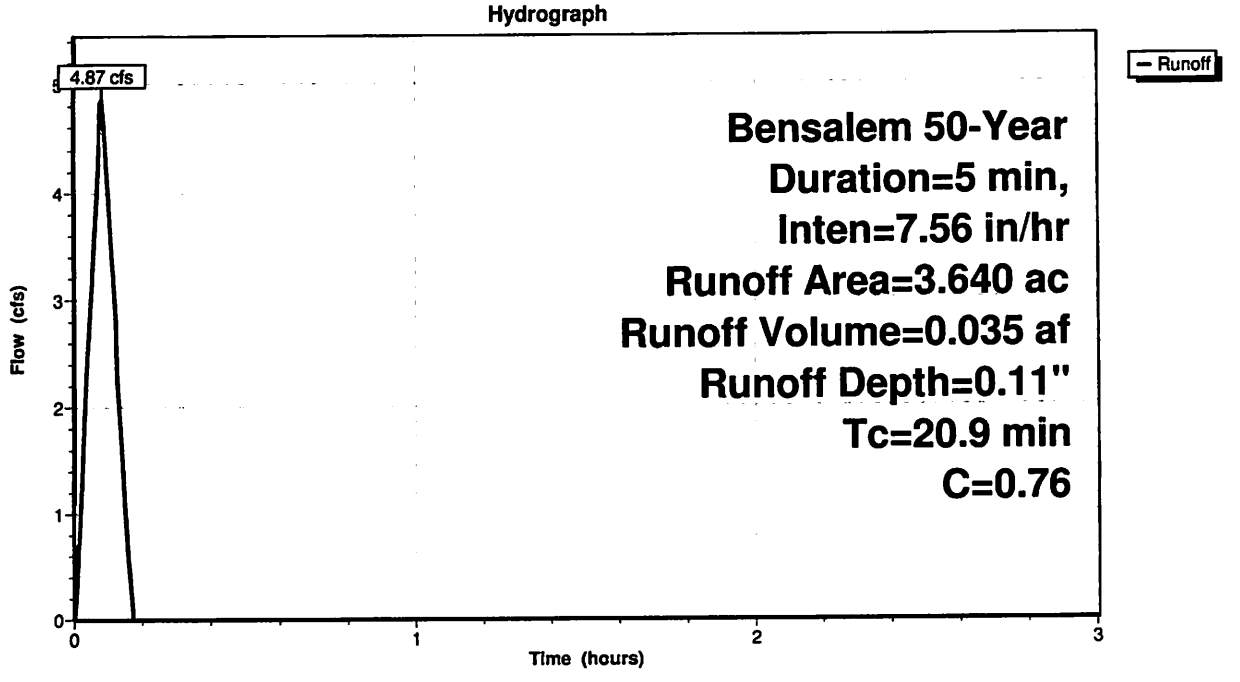

This report was prepared with the free HydroCAD SAMPLER, which is licensed for evaluation and educational use ONLY. For actual design or modeling applications you MUST use a full version of HydroCAD which may be purchased at www.hydrocad.net. Full programs also include complete technical support,training materials, and additional features which are essential for actual design work.

Summary for Reach POA: POA-1

Inflow Area = 11.300 ac, 29.03% Impervious, Inflow Depth = 0.07" for 50-Year event
Inflow = 7.34 cfs @ 0.09 hrs, Volume= 0.062 af
Outflow = 7.34 cfs @ 0.09 hrs, Volume= 0.062 af, Atten= 0%, Lag= 0.0 min

Routing by Stor-Ind+Trans method, Time Span= 0.00-3.00 hrs, dt= 0.01 hrs

Reach POA: POA-1

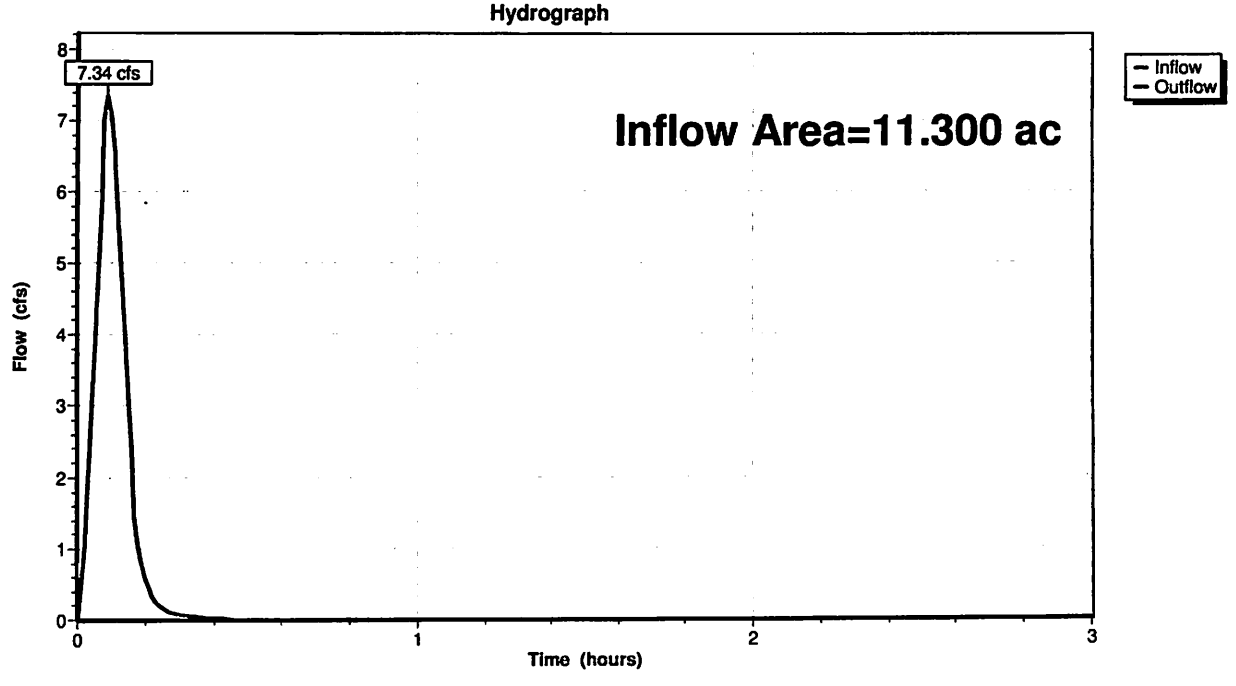

This report was prepared with the free HydroCAD SAMPLER, which is licensed for evaluation and educational use ONLY. For actual design or modeling applications you MUST use a full version of HydroCAD which may be purchased at www.hydrocad.net. Full programs also include complete technical support,training materials, and additional features which are essential for actual design work.

Summary for Pond DW-1: DRY WELL

Inflow Area = 3.640 ac, 70.88% Impervious, Inflow Depth = 0.11" for 50-Year event
Inflow = 4.87 cfs @ 0.08 hrs, Volume= 0.035 af
Outflow = 3.75 cfs @ 0.11 hrs, Volume= 0.034 af, Atten= 23%, Lag= 1.4 min
Discarded = 0.01 cfs @ 0.07 hrs, Volume= 0.001 af
Primary = 3.74 cfs @ 0.11 hrs, Volume= 0.033 af

Routing by Stor-Ind method, Time Span= 0.00-3.00 hrs, dt= 0.01 hrs
Peak Elev= 95.22' @ 0.11 hrs Surf.Area= 1,241 sf Storage= 512 cf

Plug-Flow detention time= 3.6 min calculated for 0.034 af (98% of inflow)
Center-of-Mass det. time= 4.0 min (9.0 - 5.0)

Volume	Invert	Avail.Storage	Storage Description
#1	93.65'	1,634 cf	**102.0" W x 42.0" H Box Dry Well** L= 146.0' S= 0.0086 '/' 4,344 cf Overall - 258 cf Embedded = 4,085 cf x 40.0% Voids
#2	94.15'	258 cf	**18.0" Round Pipe Storage** Inside #1 L= 146.0' S= 0.0086 '/'
#3	97.16'	175 cf	**36.0" W x 12.0" H Box Stone Beneath River Jack** L= 146.0' S= 0.0086 '/' 438 cf Overall x 40.0% Voids
#4	98.17'	88 cf	**36.0" W x 6.0" H Box River Jack** L= 146.0' S= 0.0086 '/' 219 cf Overall x 40.0% Voids
		2,155 cf	Total Available Storage

Device	Routing	Invert	Outlet Devices
#1	Discarded	93.65'	**0.250 in/hr Exfiltration over Surface area**
#2	Primary	94.15'	**18.0" Round Culvert** L= 49.0' CPP, projecting, no headwall, Ke= 0.900 Inlet / Outlet Invert= 94.15' / 93.35' S= 0.0163 '/' Cc= 0.900 n= 0.013 Corrugated PE, smooth interior, Flow Area= 1.77 sf

Discarded OutFlow Max=0.01 cfs @ 0.07 hrs HW=94.96' (Free Discharge)
↑**1=Exfiltration** (Exfiltration Controls 0.01 cfs)

Primary OutFlow Max=3.72 cfs @ 0.11 hrs HW=95.21' (Free Discharge)
↑**2=Culvert** (Inlet Controls 3.72 cfs @ 2.77 fps)

This report was prepared with the free HydroCAD SAMPLER, which is licensed for evaluation and educational use ONLY. For actual design or modeling applications you MUST use a full version of HydroCAD which may be purchased at www.hydrocad.net. Full programs also include complete technical support,training materials, and additional features which are essential for actual design work.

Pond DW-1: DRY WELL

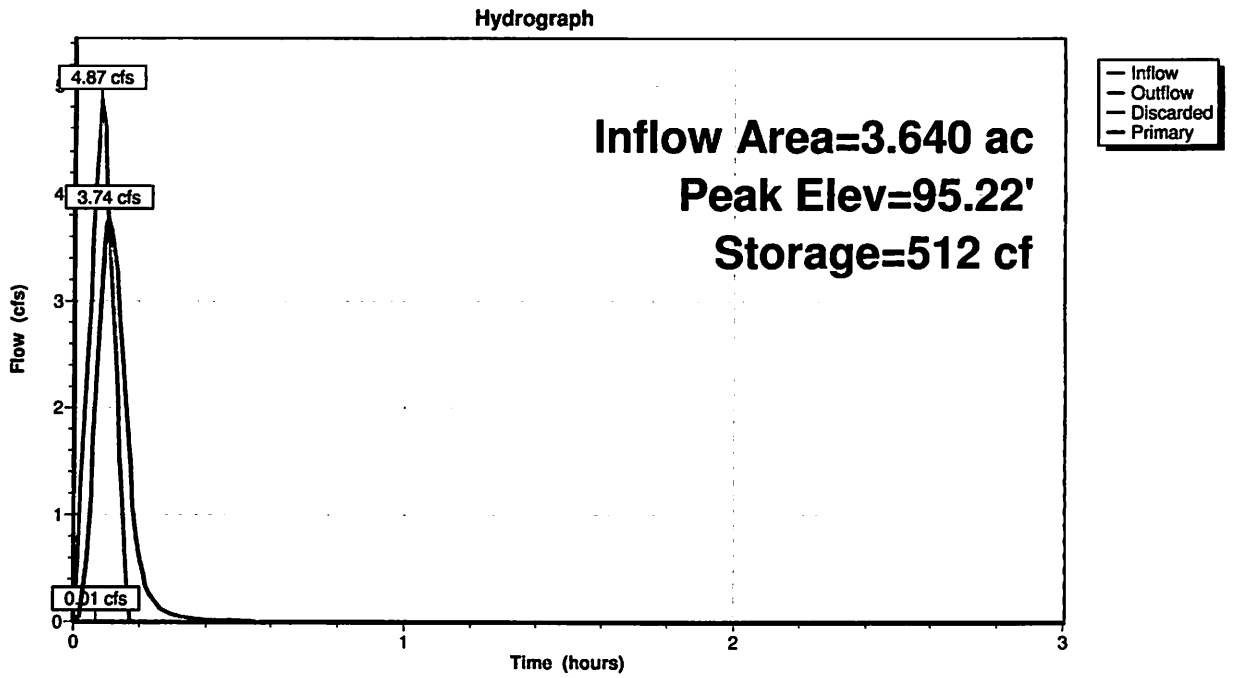

This report was prepared with the free HydroCAD SAMPLER, which is licensed for evaluation and educational use ONLY. For actual design or modeling applications you MUST use a full version of HydroCAD which may be purchased at www.hydrocad.net. Full programs also include complete technical support,training materials, and additional features which are essential for actual design work.

Pond DW-1: DRY WELL

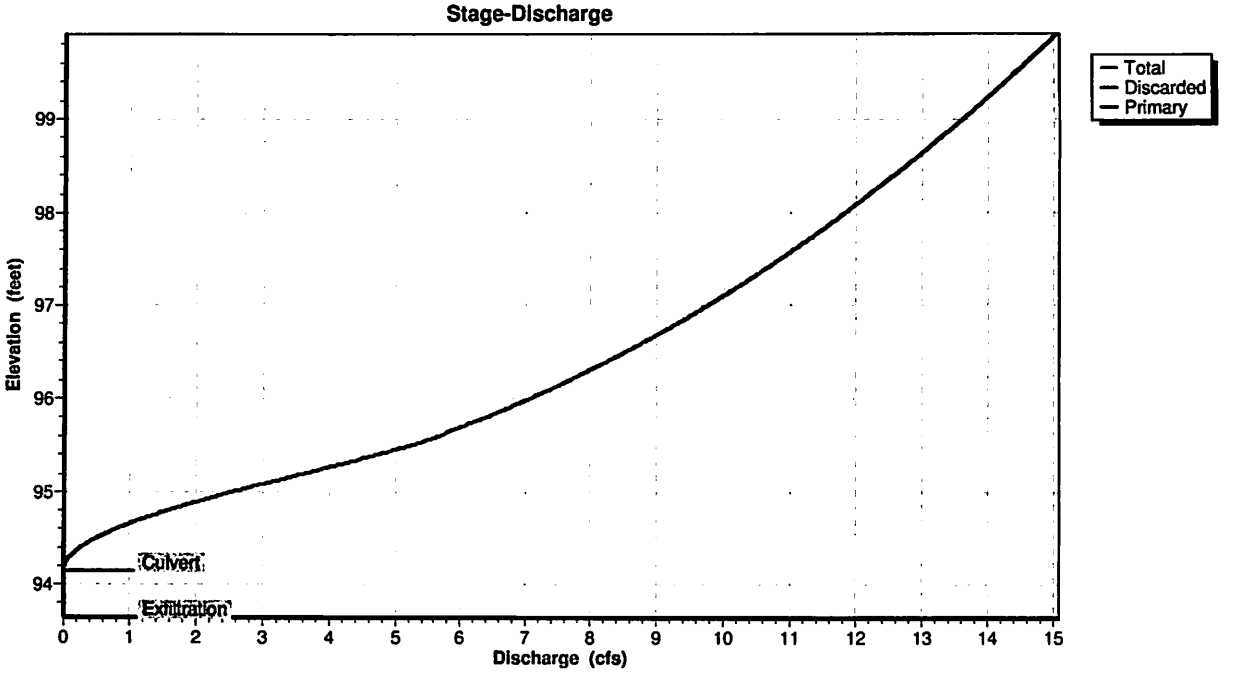

This report was prepared with the free HydroCAD SAMPLER, which is licensed for evaluation and educational use ONLY. For actual design or modeling applications you MUST use a full version of HydroCAD which may be purchased at www.hydrocad.net. Full programs also include complete technical support,training materials, and additional features which are essential for actual design work.

Pond DW-1: DRY WELL

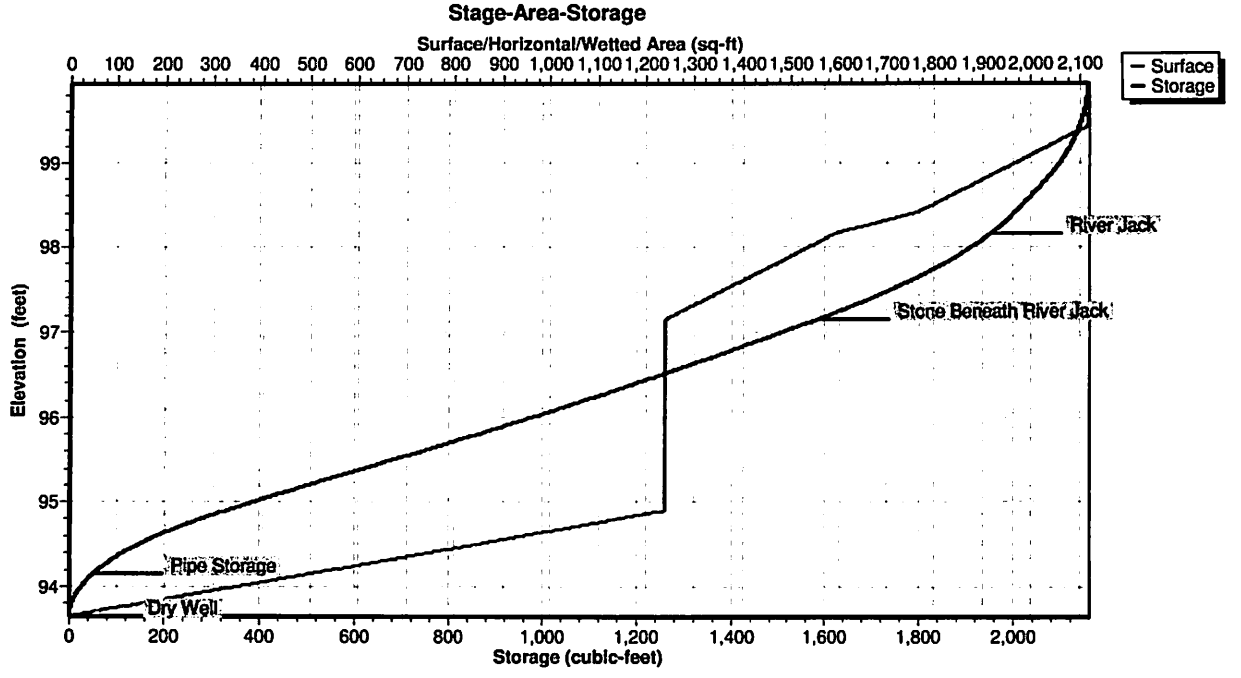

This report was prepared with the free HydroCAD SAMPLER, which is licensed for evaluation and educational use ONLY. For actual design or modeling applications you MUST use a full version of HydroCAD which may be purchased at www.hydrocad.net. Full programs also include complete technical support,training materials, and additional features which are essential for actual design work.

Time span=0.00-3.00 hrs, dt=0.01 hrs, 301 points
Runoff by Rational method, Rise/Fall=1.0/1.0 xTc
Reach routing by Stor-Ind+Trans method - Pond routing by Stor-Ind method

Subcatchment BY-1: BYPASS AREA 1 Runoff Area=7.660 ac 9.14% Impervious Runoff Depth=0.05"
Flow Length=865' Tc=25.7 min C=0.37 Runoff=4.31 cfs 0.031 af

Subcatchment PRE-1: EXISTING Runoff Area=11.300 ac 16.64% Impervious Runoff Depth=0.06"
Flow Length=865' Tc=25.7 min C=0.49 Runoff=8.43 cfs 0.060 af

Subcatchment TRIB-1: TRIBUTARY AREA 1 Runoff Area=3.640 ac 70.88% Impervious Runoff Depth=0.12"
Tc=20.9 min C=0.76 Runoff=5.18 cfs 0.037 af

Reach POA: POA-1 Inflow=7.82 cfs 0.066 af
Outflow=7.82 cfs 0.066 af

Pond DW-1: DRY WELL Peak Elev=95.27' Storage=539 cf Inflow=5.18 cfs 0.037 af
Discarded=0.01 cfs 0.001 af Primary=4.00 cfs 0.035 af Outflow=4.01 cfs 0.036 af

Total Runoff Area = 22.600 ac Runoff Volume = 0.128 af Average Runoff Depth = 0.07"
77.17% Pervious = 17.440 ac 22.83% Impervious = 5.160 ac

This report was prepared with the free HydroCAD SAMPLER, which is licensed for evaluation and educational use ONLY. For actual design or modeling applications you MUST use a full version of HydroCAD which may be purchased at www.hydrocad.net. Full programs also include complete technical support,training materials, and additional features which are essential for actual design work.

Summary for Subcatchment BY-1: BYPASS AREA 1

Runoff = 4.31 cfs @ 0.08 hrs, Volume= 0.031 af, Depth= 0.05"

Runoff by Rational method, Rise/Fall=1.0/1.0 xTc, Time Span= 0.00-3.00 hrs, dt= 0.01 hrs
Bensalem 100-Year Duration=5 min, Inten=8.04 in/hr

Area (ac)	C	Description
0.700	0.96	Impervious
2.280	0.40	Meadow, Good Condition, HSG D
4.680	0.27	Open Space, Good Condition, HSG D
7.660	0.37	Weighted Average
6.960		90.86% Pervious Area
0.700		9.14% Impervious Area

Tc (min)	Length (feet)	Slope (ft/ft)	Velocity (ft/sec)	Capacity (cfs)	Description
19.6	150	0.0200	0.13		**Sheet Flow, Sheet Flow** Grass: Dense n= 0.240 P2= 3.26"
1.9	404	0.0500	3.60		**Shallow Concentrated Flow, Shallow Flow** Unpaved Kv= 16.1 fps
4.2	311	0.0240	1.23	396.32	**Channel Flow, Channel Flow** Area= 321.5 sf Perim= 157.9' r= 2.04' n= 0.300
25.7	865	Total			

This report was prepared with the free HydroCAD SAMPLER, which is licensed for evaluation and educational use ONLY. For actual design or modeling applications you MUST use a full version of HydroCAD which may be purchased at www.hydrocad.net. Full programs also include complete technical support,training materials, and additional features which are essential for actual design work.

Subcatchment BY-1: BYPASS AREA 1

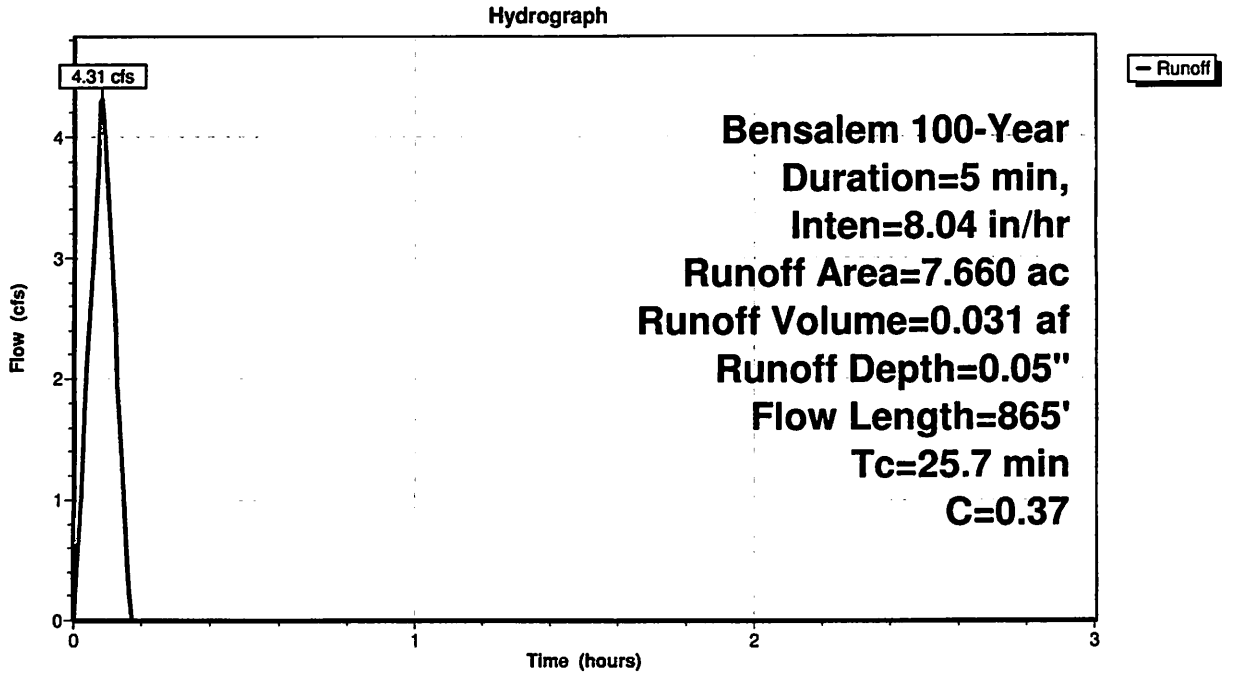

This report was prepared with the free HydroCAD SAMPLER, which is licensed for evaluation and educational use ONLY. For actual design or modeling applications you MUST use a full version of HydroCAD which may be purchased at www.hydrocad.net. Full programs also include complete technical support,training materials, and additional features which are essential for actual design work.

Summary for Subcatchment PRE-1: EXISTING

Runoff = 8.43 cfs @ 0.08 hrs, Volume= 0.060 af, Depth= 0.06"

Runoff by Rational method, Rise/Fall=1.0/1.0 xTc, Time Span= 0.00-3.00 hrs, dt= 0.01 hrs
Bensalem 100-Year Duration=5 min, Inten=8.04 in/hr

Area (ac)	C	Description
1.880	0.96	Impervious
8.950	0.40	Meadow, Good Condition, HSG D
0.470	0.40	20% Impervious, Meadow Good Condition, HSG D
11.300	0.49	Weighted Average
9.420		83.36% Pervious Area
1.880		16.64% Impervious Area

Tc (min)	Length (feet)	Slope (ft/ft)	Velocity (ft/sec)	Capacity (cfs)	Description
19.6	150	0.0200	0.13		**Sheet Flow, Sheet Flow** Grass: Dense n= 0.240 P2= 3.26"
1.2	240	0.0400	3.22		**Shallow Concentrated Flow, Shallow Flow** Unpaved Kv= 16.1 fps
0.1	16	0.0100	2.03		**Shallow Concentrated Flow, Shallow Flow** Paved Kv= 20.3 fps
0.6	148	0.0690	4.23		**Shallow Concentrated Flow, Shallow Flow** Unpaved Kv= 16.1 fps
4.2	311	0.0240	1.23	396.32	**Channel Flow, Channel Flow** Area= 321.5 sf Perim= 157.9' r= 2.04' n= 0.300
25.7	865	Total			

This report was prepared with the free HydroCAD SAMPLER, which is licensed for evaluation and educational use ONLY. For actual design or modeling applications you MUST use a full version of HydroCAD which may be purchased at www.hydrocad.net. Full programs also include complete technical support,training materials, and additional features which are essential for actual design work.

Subcatchment PRE-1: EXISTING

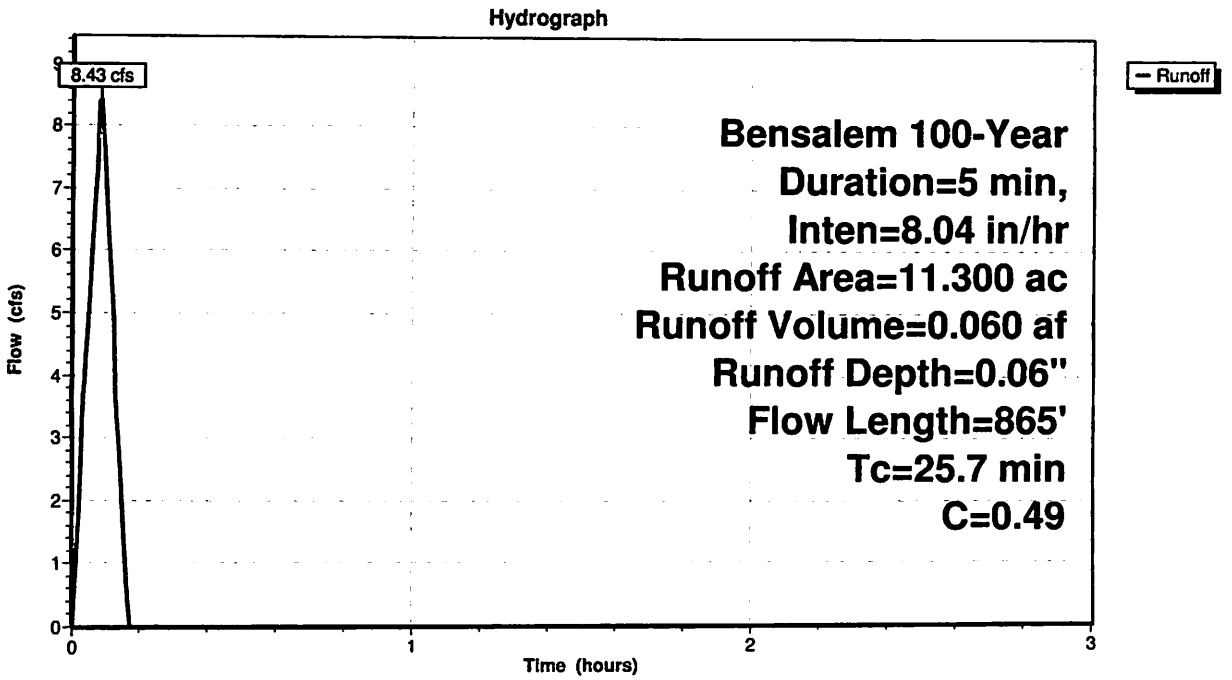

This report was prepared with the free HydroCAD SAMPLER, which is licensed for evaluation and educational use ONLY. For actual design or modeling applications you MUST use a full version of HydroCAD which may be purchased at www.hydrocad.net. Full programs also include complete technical support,training materials, and additional features which are essential for actual design work.

Summary for Subcatchment TRIB-1: TRIBUTARY AREA 1

Runoff = 5.18 cfs @ 0.08 hrs, Volume= 0.037 af, Depth= 0.12"

Runoff by Rational method, Rise/Fall=1.0/1.0 xTc, Time Span= 0.00-3.00 hrs, dt= 0.01 hrs
Bensalem 100-Year Duration=5 min, Inten=8.04 in/hr

Area (ac)	C	Description
2.580	0.96	Impervious
1.060	0.27	Open Space, Good Condition, HSG D
3.640	0.76	Weighted Average
1.060		29.12% Pervious Area
2.580		70.88% Impervious Area

Tc (min)	Length (feet)	Slope (ft/ft)	Velocity (ft/sec)	Capacity (cfs)	Description
20.9					Direct Entry, Storm Sewers Tab

Subcatchment TRIB-1: TRIBUTARY AREA 1

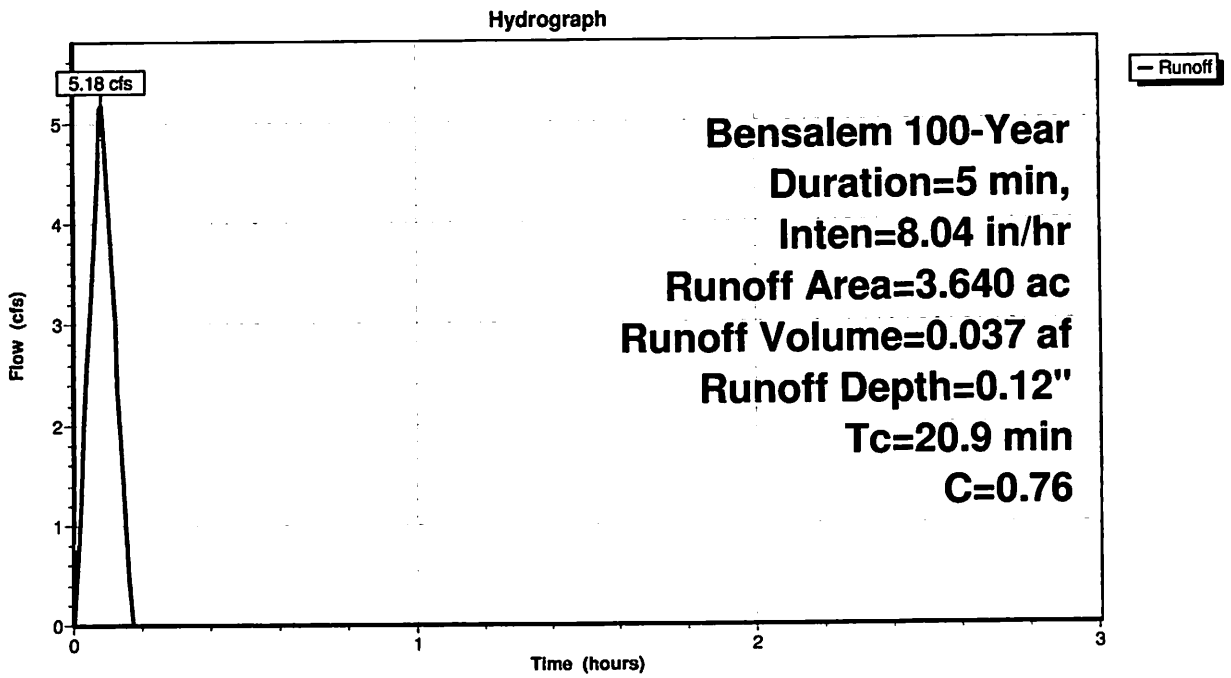

This report was prepared with the free HydroCAD SAMPLER, which is licensed for evaluation and educational use ONLY. For actual design or modeling applications you MUST use a full version of HydroCAD which may be purchased at www.hydrocad.net. Full programs also include complete technical support,training materials, and additional features which are essential for actual design work.

Summary for Reach POA: POA-1

Inflow Area = 11.300 ac, 29.03% Impervious, Inflow Depth = 0.07" for 100-Year event
Inflow = 7.82 cfs @ 0.09 hrs, Volume= 0.066 af
Outflow = 7.82 cfs @ 0.09 hrs, Volume= 0.066 af, Atten= 0%, Lag= 0.0 min

Routing by Stor-Ind+Trans method, Time Span= 0.00-3.00 hrs, dt= 0.01 hrs

Reach POA: POA-1

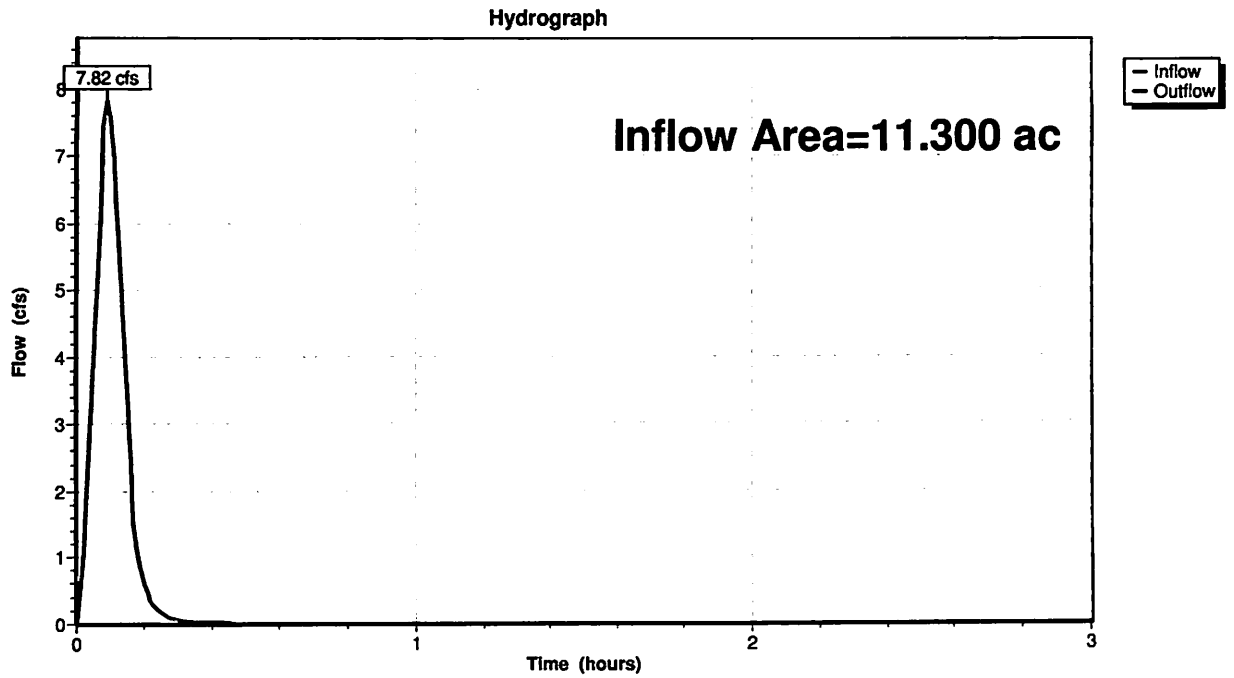

This report was prepared with the free HydroCAD SAMPLER, which is licensed for evaluation and educational use ONLY. For actual design or modeling applications you MUST use a full version of HydroCAD which may be purchased at www.hydrocad.net. Full programs also include complete technical support,training materials, and additional features which are essential for actual design work.

Summary for Pond DW-1: DRY WELL

Inflow Area =	3.640 ac, 70.88% Impervious,	Inflow Depth =	0.12"	for 100-Year event
Inflow =	5.18 cfs @ 0.08 hrs,	Volume=	0.037 af	
Outflow =	4.01 cfs @ 0.10 hrs,	Volume=	0.036 af,	Atten= 23%, Lag= 1.3 min
Discarded =	0.01 cfs @ 0.07 hrs,	Volume=	0.001 af	
Primary =	4.00 cfs @ 0.10 hrs,	Volume=	0.035 af	

Routing by Stor-Ind method, Time Span= 0.00-3.00 hrs, dt= 0.01 hrs
Peak Elev= 95.27' @ 0.10 hrs Surf.Area= 1,241 sf Storage= 539 cf

Plug-Flow detention time= 3.9 min calculated for 0.036 af (98% of inflow)
Center-of-Mass det. time= 3.9 min (8.9 - 5.0)

Volume	Invert	Avail.Storage	Storage Description
#1	93.65'	1,634 cf	**102.0" W x 42.0" H Box Dry Well** L= 146.0' S= 0.0086 '/' 4,344 cf Overall - 258 cf Embedded = 4,085 cf x 40.0% Voids
#2	94.15'	258 cf	**18.0" Round Pipe Storage** Inside #1 L= 146.0' S= 0.0086 '/'
#3	97.16'	175 cf	**36.0" W x 12.0" H Box Stone Beneath River Jack** L= 146.0' S= 0.0086 '/' 438 cf Overall x 40.0% Voids
#4	98.17'	88 cf	**36.0" W x 6.0" H Box River Jack** L= 146.0' S= 0.0086 '/' 219 cf Overall x 40.0% Voids
		2,155 cf	Total Available Storage

Device	Routing	Invert	Outlet Devices
#1	Discarded	93.65'	**0.250 in/hr Exfiltration over Surface area**
#2	Primary	94.15'	**18.0" Round Culvert** L= 49.0' CPP, projecting, no headwall, Ke= 0.900 Inlet / Outlet Invert= 94.15' / 93.35' S= 0.0163 '/' Cc= 0.900 n= 0.013 Corrugated PE, smooth interior, Flow Area= 1.77 sf

Discarded OutFlow Max=0.01 cfs @ 0.07 hrs HW=94.99' (Free Discharge)
↑**1=Exfiltration** (Exfiltration Controls 0.01 cfs)

Primary OutFlow Max=3.97 cfs @ 0.10 hrs HW=95.26' (Free Discharge)
↑**2=Culvert** (Inlet Controls 3.97 cfs @ 2.83 fps)

This report was prepared with the free HydroCAD SAMPLER, which is licensed for evaluation and educational use ONLY. For actual design or modeling applications you MUST use a full version of HydroCAD which may be purchased at www.hydrocad.net. Full programs also include complete technical support,training materials, and additional features which are essential for actual design work.

Pond DW-1: DRY WELL

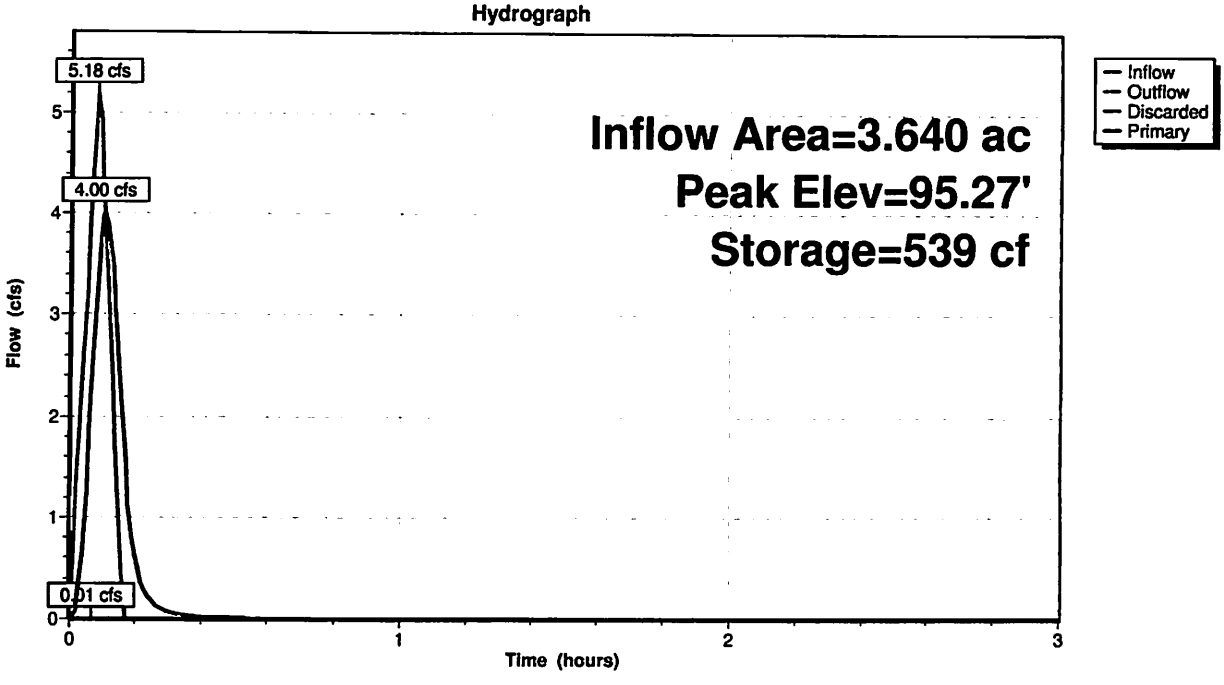

This report was prepared with the free HydroCAD SAMPLER, which is licensed for evaluation and educational use ONLY. For actual design or modeling applications you MUST use a full version of HydroCAD which may be purchased at www.hydrocad.net. Full programs also include complete technical support,training materials, and additional features which are essential for actual design work.

Pond DW-1: DRY WELL

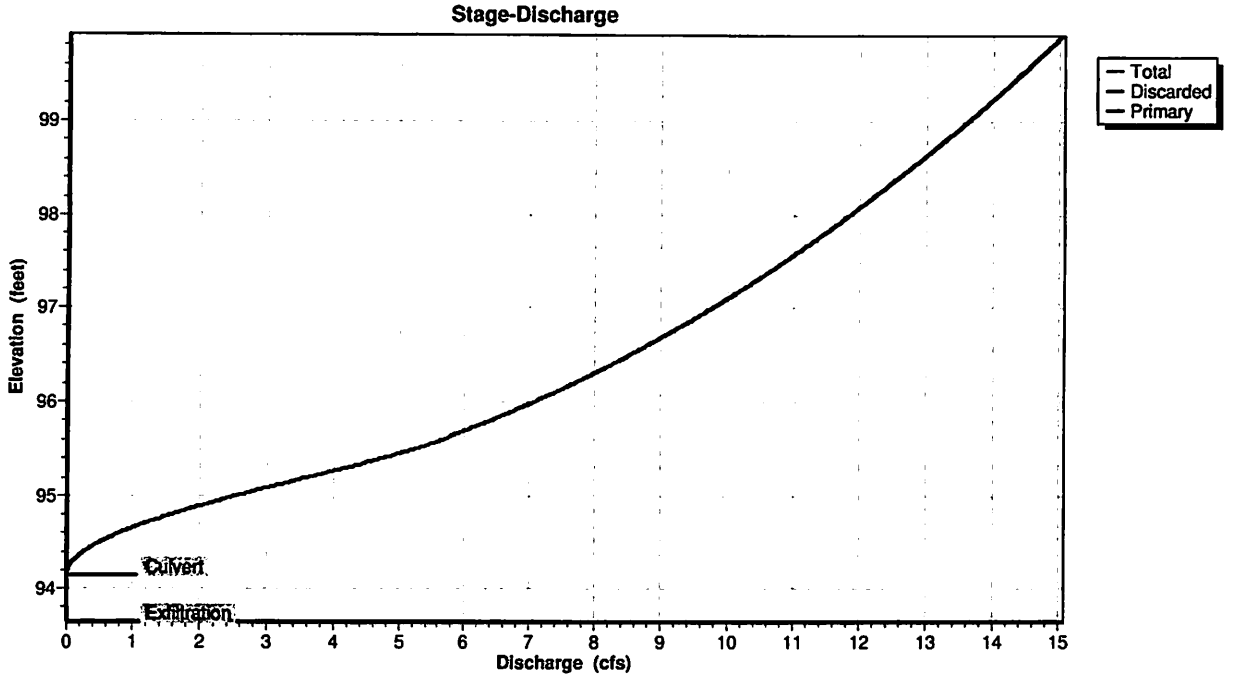

This report was prepared with the free HydroCAD SAMPLER, which is licensed for evaluation and educational use ONLY. For actual design or modeling applications you MUST use a full version of HydroCAD which may be purchased at www.hydrocad.net. Full programs also include complete technical support,training materials, and additional features which are essential for actual design work.

Pond DW-1: DRY WELL

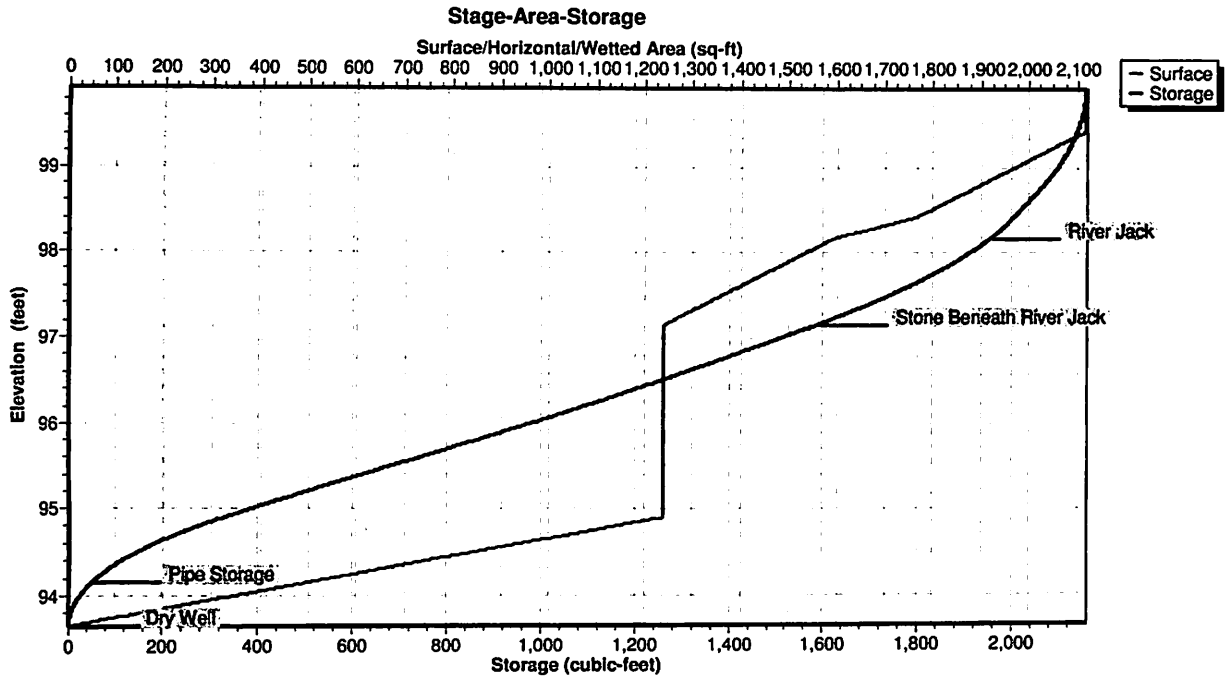

Hydraflow Plan View

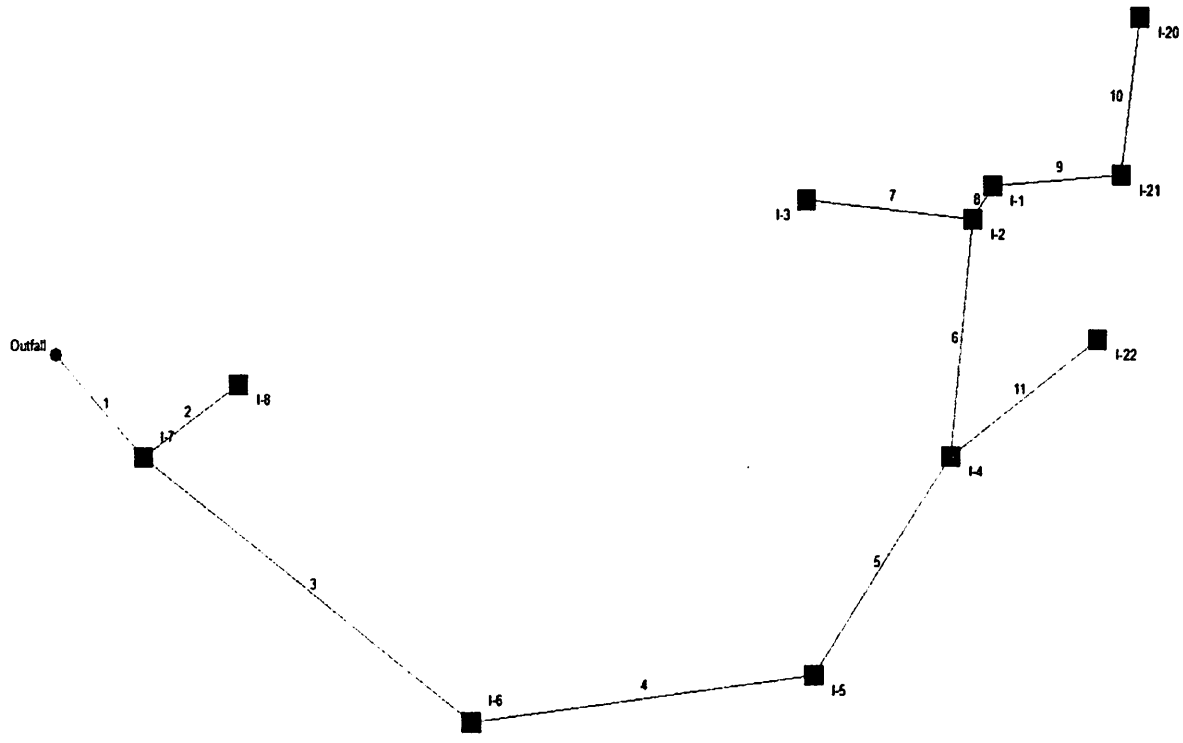

Samarpan Hindu Temple	No. Lines: 11	10-03-2016

Hydraflow Storm Sewers 2005

Inlet Report

Line No	Inlet ID	Q = CIA (cfs)	Q carry (cfs)	Q capt (cfs)	Q byp (cfs)	Junc type	Curb Inlet		Grate Inlet			Gutter							Inlet			Byp line No
							Ht (in)	L (ft)	area (sqft)	L (ft)	W (ft)	So (ft/ft)	W (ft)	Sw (ft/ft)	Sx (ft/ft)	n	Depth (ft)	Spread (ft)	Depth (ft)	Spread (ft)	Depr (in)	
1	I-7	1.45	0.00	1.45	0.00	Comb	6.0	6.00	8.00	4.00	2.00	Sag	2.00	0.010	0.010	0.013	-0.01	-0.67	0.16	1.71	2.00	Off
2	I-8	0.07	0.00	0.07	0.00	Comb	6.0	6.00	8.00	4.00	2.00	Sag	2.00	0.010	0.010	0.013	-0.14	-13.67	0.03	0.32	2.00	Off
3	I-6	2.75	0.00	2.75	0.00	Comb	6.0	6.00	8.00	4.00	2.00	Sag	2.00	0.010	0.010	0.013	0.07	7.33	0.24	7.33	2.00	Off
4	I-5	0.43	0.00	0.43	0.00	Comb	6.0	6.00	8.00	4.00	2.00	Sag	2.00	0.010	0.010	0.013	-0.10	-9.67	0.07	0.75	2.00	Off
5	I-4	0.87	0.00	0.87	0.00	Comb	6.0	6.00	8.00	4.00	2.00	Sag	2.00	0.010	0.010	0.013	-0.06	-5.67	0.11	1.18	2.00	Off
6	I-2	0.72	0.00	0.72	0.00	Comb	6.0	6.00	8.00	4.00	2.00	Sag	2.00	0.010	0.010	0.013	-0.07	-6.67	0.10	1.07	2.00	Off
7	I-3	1.59	0.00	1.59	0.00	Comb	6.0	6.00	8.00	4.00	2.00	Sag	2.00	0.010	0.010	0.013	0.00	0.33	0.17	1.82	2.00	Off
8	I-1	2.17	0.00	2.17	0.00	Comb	6.0	6.00	8.00	4.00	2.00	Sag	2.00	0.010	0.010	0.013	0.04	4.33	0.21	4.33	2.00	Off
9	I-21	0.51	0.00	0.51	0.00	Comb	6.0	6.00	8.00	4.00	2.00	Sag	2.00	0.010	0.010	0.013	-0.09	-8.67	0.08	0.86	2.00	Off
10	I-20	0.51	0.00	0.51	0.00	Comb	6.0	6.00	8.00	4.00	2.00	Sag	2.00	0.010	0.010	0.013	-0.09	-8.67	0.08	0.86	2.00	Off
11	I-22	0.51	0.00	0.51	0.00	Comb	6.0	6.00	8.00	4.00	2.00	Sag	2.00	0.010	0.010	0.013	-0.09	-8.67	0.08	0.86	2.00	Off

Samarpan Hindu Temple | Number of lines: 11 | Run Date: 10-03-2016

NOTES: Inlet N-Values = 0.016 ; Intensity = 47.00 / (Inlet time + 9.50) ^ 0.66; Return period = 100 Yrs. ; * Indicates Known Q added

MyReport

Line No.	Inlet ID	Gnd/Rim El Up (ft)	HGL Up (ft)	Gnd/Rim El Dn (ft)	HGL Dn (ft)	Cover Up (ft)	Cover Dn (ft)	Line Size (in)	Line Slope (%)	Vel Dn (ft/s)	Capac Full (cfs)	Flow Rate (cfs)	Known Q (cfs)	Drng Area (ac)	Runoff Coeff (C)	Tc (min)
1	I-7	100.13	96.57	99.60	96.34	2.51	2.20	24	0.51	4.87	16.18	7.09	0.00	0.20	0.90	20.9
2	I-8	101.13	97.54	100.13	97.54	3.38	2.58	18	0.51	0.04	7.52	0.07	0.00	0.01	0.90	5.0
3	I-6	101.56	97.57	100.13	97.44	3.23	2.48	24	0.50	2.74	15.99	8.14	0.00	0.38	0.90	10.4
4	I-5	103.70	98.42	101.77	97.91	4.79	3.44	18	0.50	4.43	7.43	6.01	0.00	0.06	0.90	9.9
5	I-4	103.16	99.10	103.70	98.91	3.84	4.79	18	0.51	3.24	7.47	5.73	0.00	0.12	0.90	9.6
6	I-2	102.29	99.36	103.16	99.27	2.60	3.84	18	0.51	2.66	7.48	4.65	0.00	0.10	0.90	9.2
7	I-3	102.24	99.76	102.29	99.75	2.27	2.60	18	0.50	0.90	7.43	1.59	0.00	0.22	0.90	5.0
8	I-1	101.75	99.74	102.29	99.73	2.00	2.60	18	0.50	1.53	7.43	2.70	0.00	0.30	0.90	9.1
9	I-21	106.17	101.93	101.75	99.82	3.10	2.00	18	7.72	0.51	29.18	0.90	0.00	0.07	0.90	7.8
10	I-20	106.31	103.08	106.17	102.05	2.00	3.10	18	2.58	1.05	16.88	0.51	0.00	0.07	0.90	5.0
11	I-22	106.17	102.94	103.16	99.46	2.00	3.84	18	7.95	0.29	29.61	0.51	0.00	0.07	0.90	5.0

Samarpan Hindu Temple | Number of lines: 11 | Date: 10-03-2016

NOTES: ** Critical depth

Hydraflow Plan View

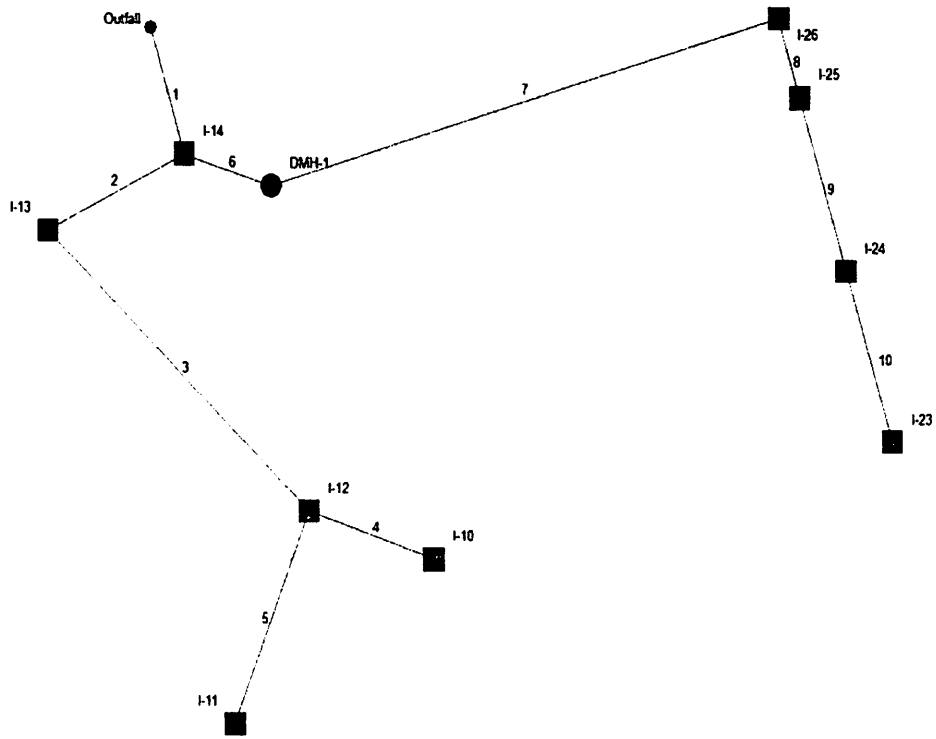

Samarpan Hindu Temple	No. Lines: 10	10-03-2016

Inlet Report

Line No	Inlet ID	Q = CIA (cfs)	Q carry (cfs)	Q capt (cfs)	Q byp (cfs)	Junc type	Curb Inlet		Grate Inlet			Gutter							Inlet			Byp line No
							Ht (In)	L (ft)	area (sqft)	L (ft)	W (ft)	So (ft/ft)	W (ft)	Sw (ft/ft)	Sx (ft/ft)	n	Depth (ft)	Spread (ft)	Depth (ft)	Spread (ft)	Depr (in)	
1	I-14	1.52	0.00	1.52	0.00	Comb	6.0	6.00	8.00	4.00	2.00	Sag	2.00	0.010	0.010	0.013	-0.01	-0.67	0.16	1.71	2.00	Off
2	I-13	3.03	0.00	3.03	0.00	Comb	6.0	6.00	8.00	4.00	2.00	Sag	2.00	0.010	0.010	0.013	0.09	9.33	0.26	9.33	2.00	Off
3	I-12	0.58	0.00	0.58	0.00	Comb	6.0	6.00	8.00	4.00	2.00	Sag	2.00	0.010	0.010	0.013	-0.08	-7.67	0.09	0.96	2.00	Off
4	I-10	1.52	0.00	1.52	0.00	Comb	6.0	6.00	8.00	4.00	2.00	Sag	2.00	0.010	0.010	0.013	-0.01	-0.67	0.16	1.71	2.00	Off
5	I-11	0.07	0.00	0.07	0.00	Comb	6.0	6.00	8.00	4.00	2.00	Sag	2.00	0.010	0.010	0.013	-0.14	-13.67	0.03	0.32	2.00	Off
6	DMH-1	0.00	0.00	0.00	0.00	MH	6.0	6.00	8.00	4.00	2.00	Sag	2.00	0.010	0.010	0.013	0.00	0.00	0.00	0.00	0.00	Off
7	I-26	0.22	0.00	0.22	0.00	Comb	6.0	6.00	8.00	4.00	2.00	Sag	2.00	0.010	0.010	0.013	-0.12	-11.67	0.05	0.54	2.00	Off
8	I-25	1.16	0.00	1.16	0.00	Comb	6.0	6.00	8.00	4.00	2.00	Sag	2.00	0.010	0.010	0.013	-0.03	-2.67	0.14	1.50	2.00	Off
9	I-24	0.29	0.00	0.29	0.00	Comb	6.0	6.00	8.00	4.00	2.00	Sag	2.00	0.010	0.010	0.013	-0.11	-10.67	0.06	0.64	2.00	Off
10	I-23	2.17	0.00	2.17	0.00	Comb	6.0	6.00	8.00	4.00	2.00	Sag	2.00	0.010	0.010	0.013	0.04	4.33	0.21	4.33	2.00	Off

Samarpan Hindu Temple | Number of lines: 10 | Run Date: 10-03-2016

NOTES: Inlet N-Values = 0.016 ; Intensity = 47.00 / (Inlet time + 9.50) ^ 0.66; Return period = 100 Yrs. ; * Indicates Known Q added

MyReport

Line No.	Inlet ID	Gnd/Rim El Up (ft)	HGL Up (ft)	Gnd/Rim El Dn (ft)	HGL Dn (ft)	Cover Up (ft)	Cover Dn (ft)	Line Size (in)	Line Slope (%)	Vel Dn (ft/s)	Capac Full (cfs)	Flow Rate (cfs)	Known Q (cfs)	Drng Area (ac)	Runoff Coeff (C)	Tc (min)
1	I-14	99.00	96.00	98.40	95.03	2.38	2.75	18	2.77	4.92	17.48	5.30	0.00	0.21	0.90	31.6
2	I-13	98.85	96.30	99.00	96.29	2.00	2.38	18	0.51	1.78	7.51	2.62	0.00	0.42	0.90	31.4
3	I-12	101.64	98.28	98.85	96.49	2.26	2.00	18	2.34	0.78	16.07	1.12	0.00	0.08	0.90	29.9
4	I-10	101.85	98.82	101.64	98.41	2.00	2.26	18	1.21	2.75	11.53	1.52	0.00	0.21	0.90	5.0
5	I-11	101.69	98.41	101.64	98.40	2.00	2.26	18	0.51	0.13	7.49	0.07	0.00	0.01	0.90	5.0
6	DMH-1	99.75	96.96	99.00	96.32	2.00	2.38	18	4.19	2.27	21.48	3.43	0.00	0.00	0.00	7.7
7	I-26	101.80	98.25	99.75	97.16	2.77	2.00	18	0.82	3.19	9.51	3.60	0.00	0.03	0.90	6.4
8	I-25	101.62	98.49	101.80	98.48	2.48	2.77	18	0.50	2.91	7.43	3.42	0.00	0.16	0.90	6.2
9	I-24	101.62	98.64	0.00	98.62	2.24	N/A	18	0.50	1.95	7.43	2.39	0.00	0.04	0.90	5.7
10	I-23	101.62	98.80	0.00	98.78	2.00	N/A	18	0.50	1.95	7.43	2.17	0.00	0.30	0.90	5.0

Samarpan Hindu Temple | Number of lines: 10 | Date: 10-03-2016

NOTES: ** Critical depth

Hydraflow Plan View

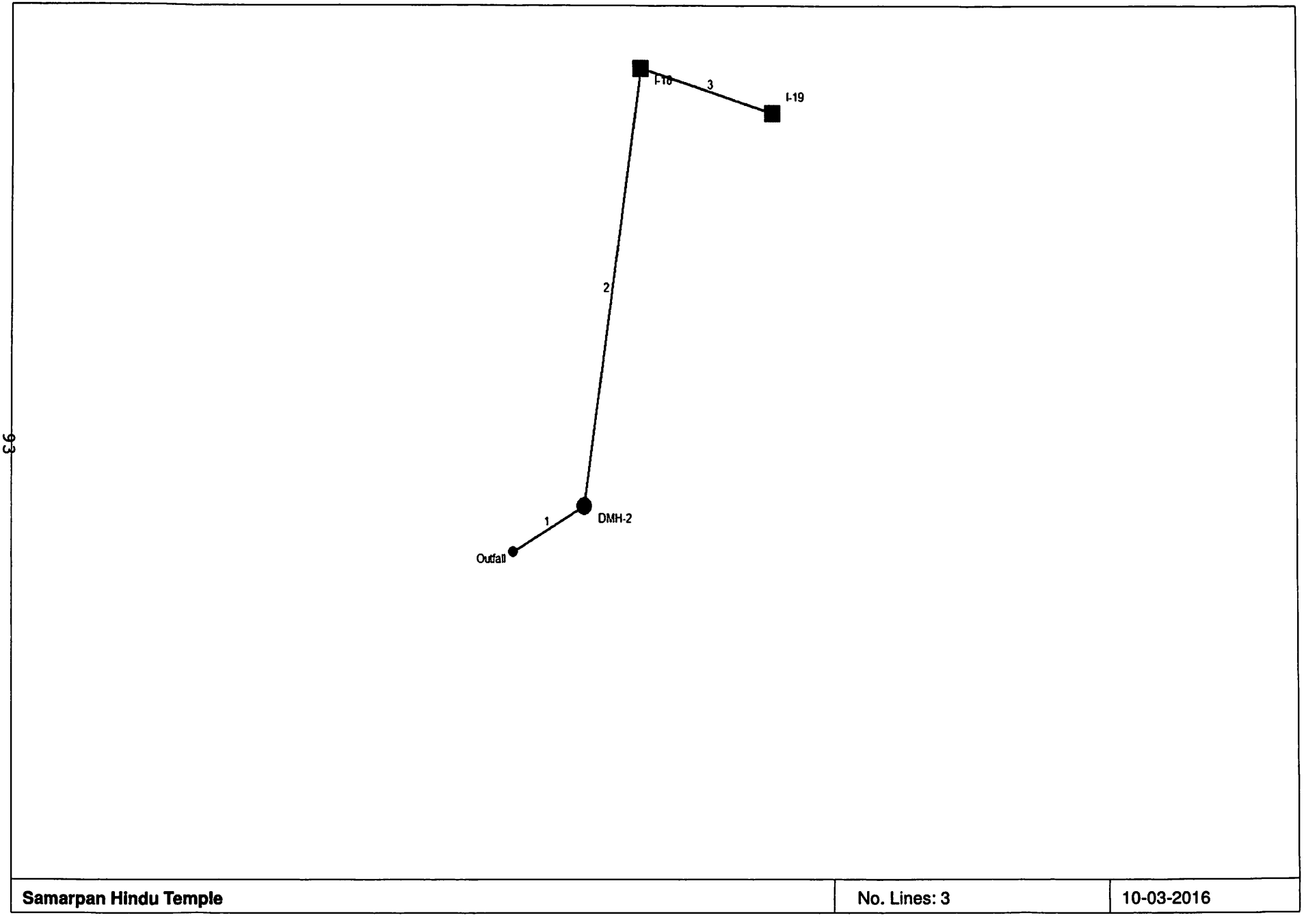

Samarpan Hindu Temple	No. Lines: 3	10-03-2016

Inlet Report

Line No	Inlet ID	Q = CIA (cfs)	Q carry (cfs)	Q capt (cfs)	Q byp (cfs)	Junc type	Curb Inlet		Grate Inlet			Gutter							Inlet			Byp line No
							Ht (in)	L (ft)	area (sqft)	L (ft)	W (ft)	So (ft/ft)	W (ft)	Sw (ft/ft)	Sx (ft/ft)	n	Depth (ft)	Spread (ft)	Depth (ft)	Spread (ft)	Depr (in)	
1	DMH-2	0.65	0.00	0.00	0.65	MH	6.0	6.00	8.00	4.00	2.00	Sag	2.00	0.010	0.010	0.013	0.00	0.00	0.00	0.00	0.00	Off
2	I-18	0.65	0.00	0.65	0.00	Comb	6.0	6.00	8.00	4.00	2.00	Sag	2.00	0.010	0.010	0.013	-0.07	-6.67	0.10	1.07	2.00	Off
3	I-19	0.72	0.00	0.72	0.00	Comb	6.0	6.00	8.00	4.00	2.00	Sag	2.00	0.010	0.010	0.013	-0.07	-6.67	0.10	1.07	2.00	Off

Samarpan Hindu Temple | Number of lines: 3 | Run Date: 10-03-2016

NOTES: Inlet N-Values = 0.016 ; Intensity = 47.00 / (Inlet time + 9.50) ^ 0.66; Return period = 100 Yrs. ; * Indicates Known Q added

Report

Line No.	Inlet ID	Gnd/Rim El Up (ft)	HGL Up (ft)	Gnd/Rim El Dn (ft)	HGL Dn (ft)	Cover Up (ft)	Cover Dn (ft)	Line Size (in)	Line Slope (%)	Vel Dn (ft/s)	Capac Full (cfs)	Flow Rate (cfs)	Known Q (cfs)	Drng Area (ac)	Runoff Coeff (C)	Tc (min)
1	DMH-2	98.50	94.79	98.10	94.67	2.73	2.45	18	1.00	3.41	10.50	1.85	0.00	0.09	0.90	7.1
2	I-18	98.34	95.18	98.34	94.96	2.10	2.57	18	0.81	1.66	9.45	1.32	0.00	0.09	0.90	5.8
3	I-19	98.34	95.27	98.34	95.27	2.00	2.10	18	0.50	1.29	7.43	0.72	0.00	0.10	0.90	5.0

Samarpan Hindu Temple | Number of lines: 3 | Date: 10-03-2016

NOTES: ** Critical depth

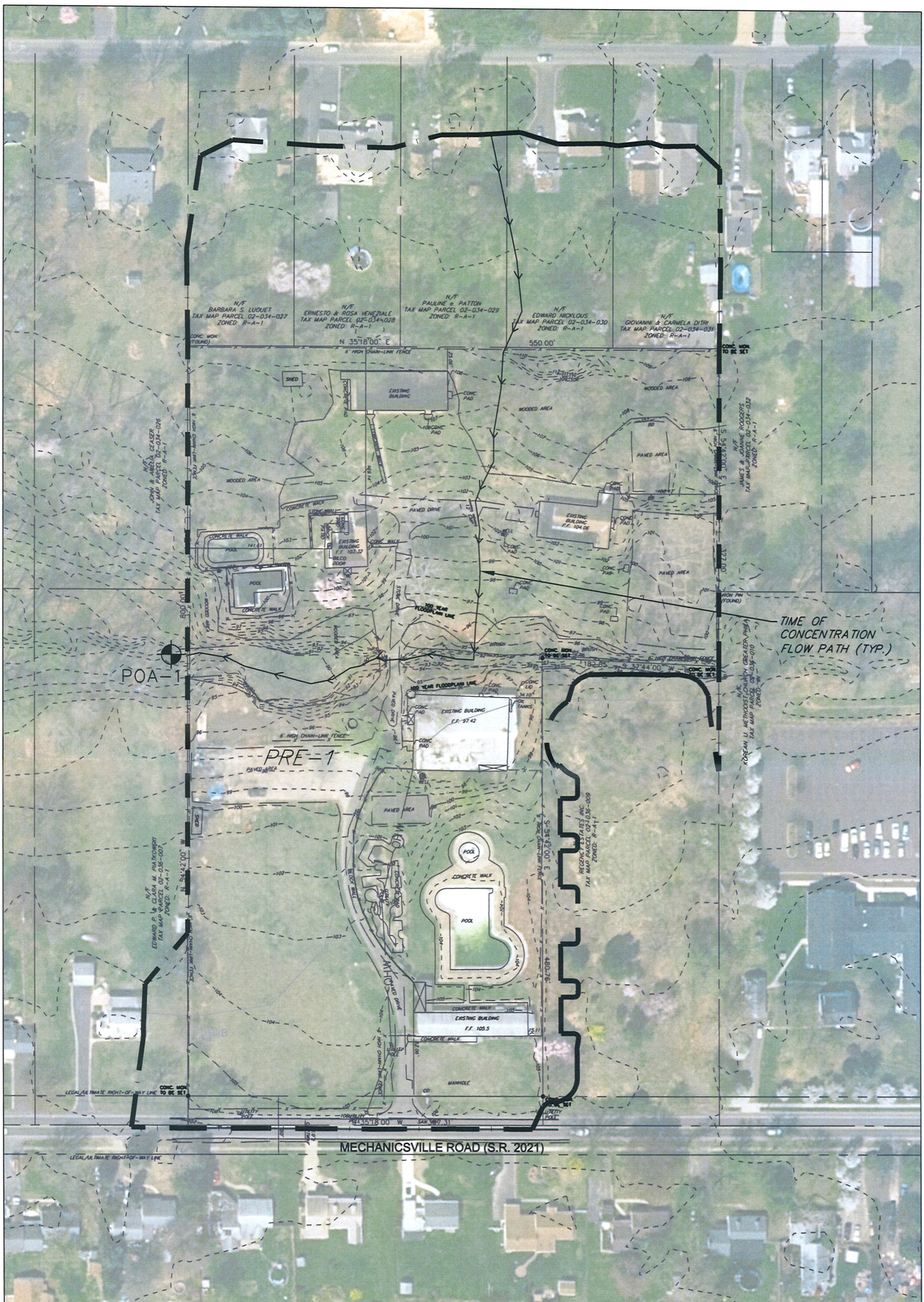

PREDEVELOPMENT DRAINAGE AREA BOUNDARY MAP

SAMARPAN HINDU TEMPLE

BENSALEM TOWNSHIP BUCKS COUNTY

PLAN DATE:	REVISION #	REVISED	REVISION
9/30/16			
JOB #			
5447			
SCALE:	100 0 50 100		
1" = 100'			

DUMACK ENGINEERING
A PROFESSIONAL CORPORATION
ESTABLISHED IN 1964
CIVIL - STRUCTURAL ENGINEERS & SURVEYORS
PENNS PARK OFFICE
ROTTERSFORD OFFICE
www.Dumack.com

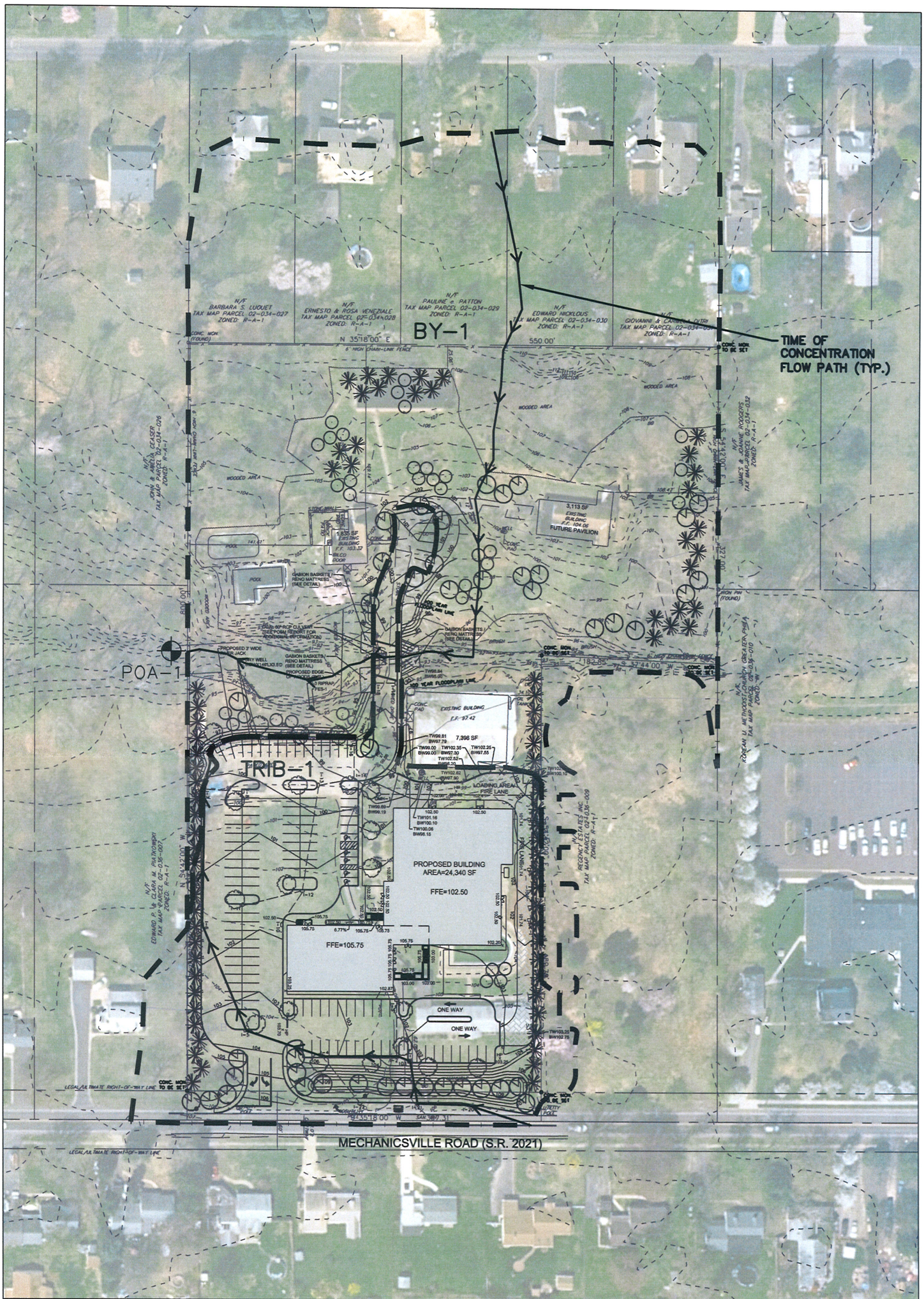

POSTDEVELOPMENT DRAINAGE AREA BOUNDARY MAP

SAMARPAN HINDU TEMPLE

BENSALEM TOWNSHIP BUCKS COUNTY

PLAN DATE:	REVISION #	REVISED	REVISION
9/30/16			
JOB #			
5447			
SCALE:	100 0 50 100		
1" = 100'			

DUMACK ENGINEERING
A PROFESSIONAL CORPORATION
ESTABLISHED IN 1964
CIVIL - STRUCTURAL ENGINEERS & SURVEYORS
PENNS PARK OFFICE
ROTTERFORD OFFICE
www.Dumack.com

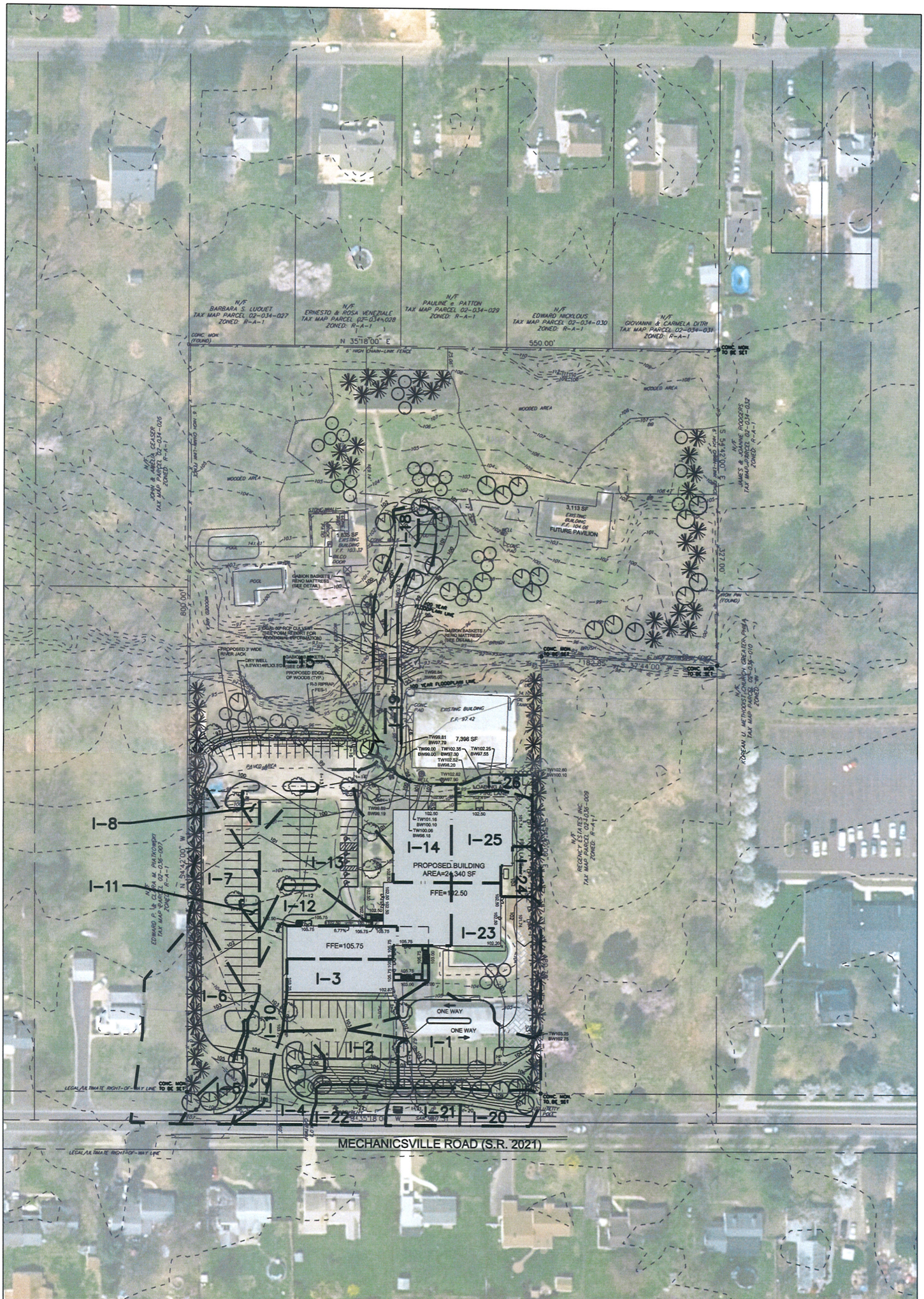

INLET DRAINAGE AREA BOUNDARY MAP

SAMARPAN HINDU TEMPLE

BENSALEM TOWNSHIP BUCKS COUNTY

PLAN DATE:	REVISION #	REVISED	REVISION
9/30/16			
JOB #			
5447			
SCALE:	100 0 50 100		
1" = 100'			

DUMACK ENGINEERING
A PROFESSIONAL CORPORATION
ESTABLISHED IN 1964
CIVIL - STRUCTURAL ENGINEERS & SURVEYORS
PENNS PARK OFFICE
ROTTERSFORD OFFICE
P.O. BOX 607
PENNS PARK, PA 18943
PHONE: (215) 598-1239
FAX: (215) 598-1232
P.O. BOX 606
ROTTERSFORD, PA 19468
PHONE: (215) 589-5449
FAX: (215) 589-5449
www.Dumack.com