BENSALEM TOWNSHIP

Building and Planning Department
2400 Byberry Road ▪ Bensalem PA 19020
215-633-3644 ▪ FAX 215-633-3653

SUBDIVISION AND LAND DEVELOPMENT APPLICATION
SITE AND PLAN CHARACTERISTICS

ALL APPLICANTS FOR MINOR or MAJOR LAND DEVELOPMENT and MAJOR SUB-DIVISIONS MUST SUBMIT A TRAFFIC STUDY AT TIME OF SUBMISSION

CHECK ONE: DATE OF SUBMISSION: _____

☐ Sketch Plan	Tax Parcel #	2-1-37, 37-1, 37-4, 37-5, 37-6, 37-7, 38
☐ Lot Line Change	Location	US 1 and Rockhill Drive
☐ Minor Subdivision	Zoning Classification	H-C1
☐ Minor Land Development	Proposed # of Lots or Leaseholds	N/A
☐ Preliminary Subdivision	Area of Commercial Bldg of Addition (sf)	27,553
☐ Preliminary Land Development	Name of Development	The Marketplace at Neshaminy
☐ Final Subdivision	Proposed Use	Shopping Center
☐ Final Land Development	Site Area (ac)	40.1 Acres
☐ Conditional Use	Development Area (ac)	212,500 SF (4.9 acres)
☐ Other		

SUBMISSION IS TO INCLUDE A DISC WITH APPLICATION AND PLAN(S) IN PDF FILE FORMAT or email same to jmryan@bensalempa.gov

1. Name, address & phone No. of Applicant:

Maurice Zekaria, c/o Paramount Realty Services, Inc.
1195 Route 70 Suite 2000
Lakewood, NJ 08701
732-961-8112 D 732-829-1124 C mz@paramountrealty.com

_____
Signature

Daytime Contact Number

2. Name, address & phone No. of Attorney:
(if other than applicant)

Thomas Hecker, Esq., Begley, Carlin & Mandio, LLP
680 Middletown Boulevard
Langhorne, PA 19047
215-750-0110 thecker@begleycarlin.com

_____
Signature

Daytime Contact Number

3. Name, address & phone No. of Owner:

Maurice Zekaria, c/o Paramount realty Services, Inc.
1195 Route 70 Suite 2000
Lakewood, NJ 08701
732-961-8112 D 732-829-1124 C mz@paramountrealty.com

_____
Signature

Daytime Contact Number

4. Name, address & phone No. of Person Designing Plan:

Brian Conlon, c/o Langan
30 S 17th Street, Suite 1300
Philadelphia, PA 19103
215-446-2929 D 267-640-2857 C bconlon@langan.com

_____
Signature

Daytime Contact Number

5. Has parcel ever been subject to subdivision or land development approval? Yes

   If Yes: Date of Approval
   Plan Title
   Recording Date
   Plan Book
   Page

6. Has parcel ever received relief from the Zoning Hearing Board?

   If yes, list date of decision and attach copy of the decision.

7. Deed restrictions that apply or are being contemplated. If no restrictions, state none. If yes, attach copy.

   N/A

8. List proposed improvements and utilities to be installed:

   Construction of a 16,862 retail / restaurant building and a 10,691 retail building along with associated infrastructure and improvements to support the new construction.

9. List title of each plan, report and any other documents submitted:

10. List presence of floodplain, wetlands, steep slopes or any other environmental features on site:

    Wetlands and streams are located outside of development area.

11. List all variances and special exceptions that will be required from the Zoning Hearing Board for this application:

12. List all zoning changes, conditional uses and waivers that will be required for this application:

***NOTE**: Plan requirements can be found in The Code of the Township of Bensalem, Chapter 201*

MUNICIPAL USE ONLY

Date Received:

Application Fee:

Escrow:

PRELIMINARY AND FINAL LAND DEVELOPMENT PLAN

FOR

THE MARKETPLACE AT NESHAMINY

SITUATED IN:

BENSALEM TOWNSHIP
BUCKS COUNTY, PENNSYLVANIA

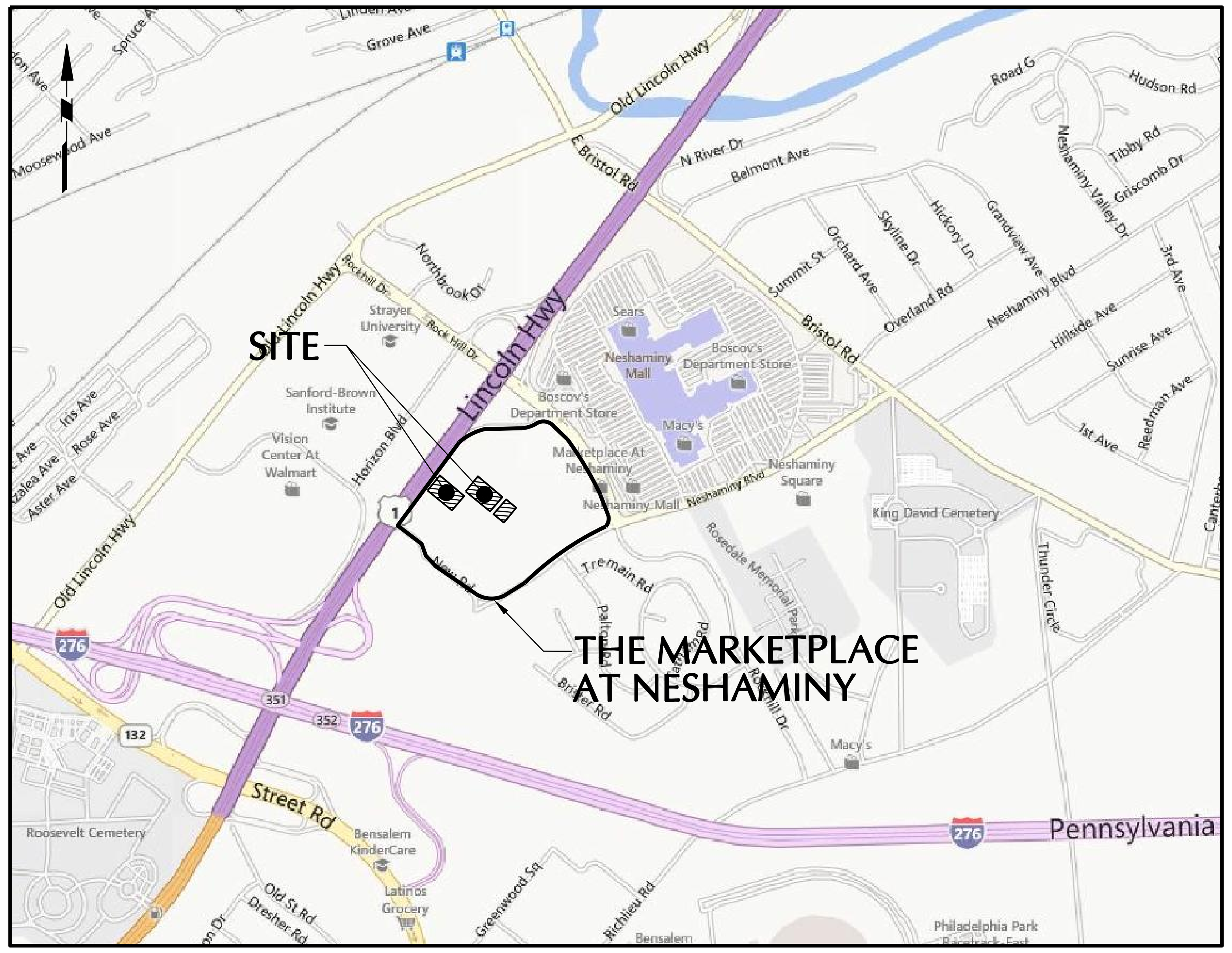

LOCATION MAP

1"=1000'

DRAWING INDEX

DRAWING SEQUENCE	DRAWING NUMBER	DRAWING TITLE	ORIGINAL DATE	DRAWING REVISION
1	GI-001	COVER SHEET	24 JUNE 2016	8 AUGUST 2016
2	GI-101	TAX MAP, ZONING MAP AND ADJACENT PROPERTY OWNER LIST	24 JUNE 2016	8 AUGUST 2016
3	VT-101	PARTIAL TOPOGRAPHIC SURVEY	31 OCTOBER 2014	--
4	CD-101	SITE DEMOLITION PLAN	24 JUNE 2016	8 AUGUST 2016
5	CS-100	MASTER SITE PLAN	24 JUNE 2016	8 AUGUST 2016
6	CS-101	SITE CONSTRUCTION PLAN	24 JUNE 2016	8 AUGUST 2016
7	CS-301	PAVEMENT AND VEHICLE CIRCULATION PLAN	24 JUNE 2016	8 AUGUST 2016
8	CS-302	FIRE TRUCK CIRCULATION PLAN	8 AUGUST 2016	--
9	CS-501	SITE CONSTRUCTION DETAILS	24 JUNE 2016	8 AUGUST 2016
10	CG-101	POST-CONSTRUCTION STORMWATER MANAGEMENT PLAN	24 JUNE 2016	8 AUGUST 2016
11	CG-102	POST-CONSTRUCTION STORMWATER MANAGEMENT GRADING & DRAINAGE PLAN	24 JUNE 2016	8 AUGUST 2016
12	CG-201	POST-CONSTRUCTION STORMWATER MANAGEMENT STORM SEWER PROFILES I	24 JUNE 2016	8 AUGUST 2016
13	CG-202	POST-CONSTRUCTION STORMWATER MANAGEMENT STORM SEWER PROFILES II	24 JUNE 2016	8 AUGUST 2016
14	CG-203	POST-CONSTRUCTION STORMWATER MANAGEMENT STORM SEWER PROFILES III	8 AUGUST 2016	--
15	CG-301	POST-CONSTRUCTION STORMWATER MANAGEMENT LANDSCAPE RESTORATION PLAN	24 JUNE 2016	8 AUGUST 2016
16	CG-302	POST-CONSTRUCTION STORMWATER MANAGEMENT LANDSCAPE NOTES AND DETAILS	24 JUNE 2016	8 AUGUST 2016
17	CG-501	POST-CONSTRUCTION STORMWATER MANAGEMENT DETAILS I	24 JUNE 2016	8 AUGUST 2016
18	CG-502	POST-CONSTRUCTION STORMWATER MANAGEMENT DETAILS II	24 JUNE 2016	8 AUGUST 2016
19	CG-503	POST-CONSTRUCTION STORMWATER MANAGEMENT DETAILS III	24 JUNE 2016	8 AUGUST 2016
20	CE-101	SOIL EROSION AND SEDIMENT CONTROL PLAN - STAGE I	24 JUNE 2016	8 AUGUST 2016
21	CE-102	SOIL EROSION AND SEDIMENT CONTROL PLAN - STAGE II	24 JUNE 2016	8 AUGUST 2016
22	CE-103	SOIL EROSION AND SEDIMENT CONTROL PLAN - STAGE III	24 JUNE 2016	8 AUGUST 2016
23	CE-104	SOIL EROSION AND SEDIMENT CONTROL PLAN - STAGE IV	24 JUNE 2016	8 AUGUST 2016
24	CE-501	SOIL EROSION AND SEDIMENT CONTROL NOTES & DETAILS	24 JUNE 2016	8 AUGUST 2016
25	CU-101	UTILITY PLAN	24 JUNE 2016	8 AUGUST 2016
26	CU-201	SANITARY SEWER PROFILE	24 JUNE 2016	8 AUGUST 2016
27	CU-501	SEWER AND WATER CONSTRUCTION NOTES AND DETAILS	24 JUNE 2016	8 AUGUST 2016
28	LL-101	LIGHTING PLAN	24 JUNE 2016	8 AUGUST 2016
29	LL-501	LIGHTING NOTES AND DETAILS	24 JUNE 2016	8 AUGUST 2016

PROJECT SITE:
BENSALEM TOWNSHIP TAX MAP PAGE 2-1 PARCELS 37, 37-1, 37-4, 37-5, 37-6, 37-7, 38
LOT AREA = 40.66 ACRES
ZONING DISTRICT: HIGHWAY COMMERCIAL DISTRICT (H-C1)
ADDRESS: US 1 AND ROCKHILL DRIVE

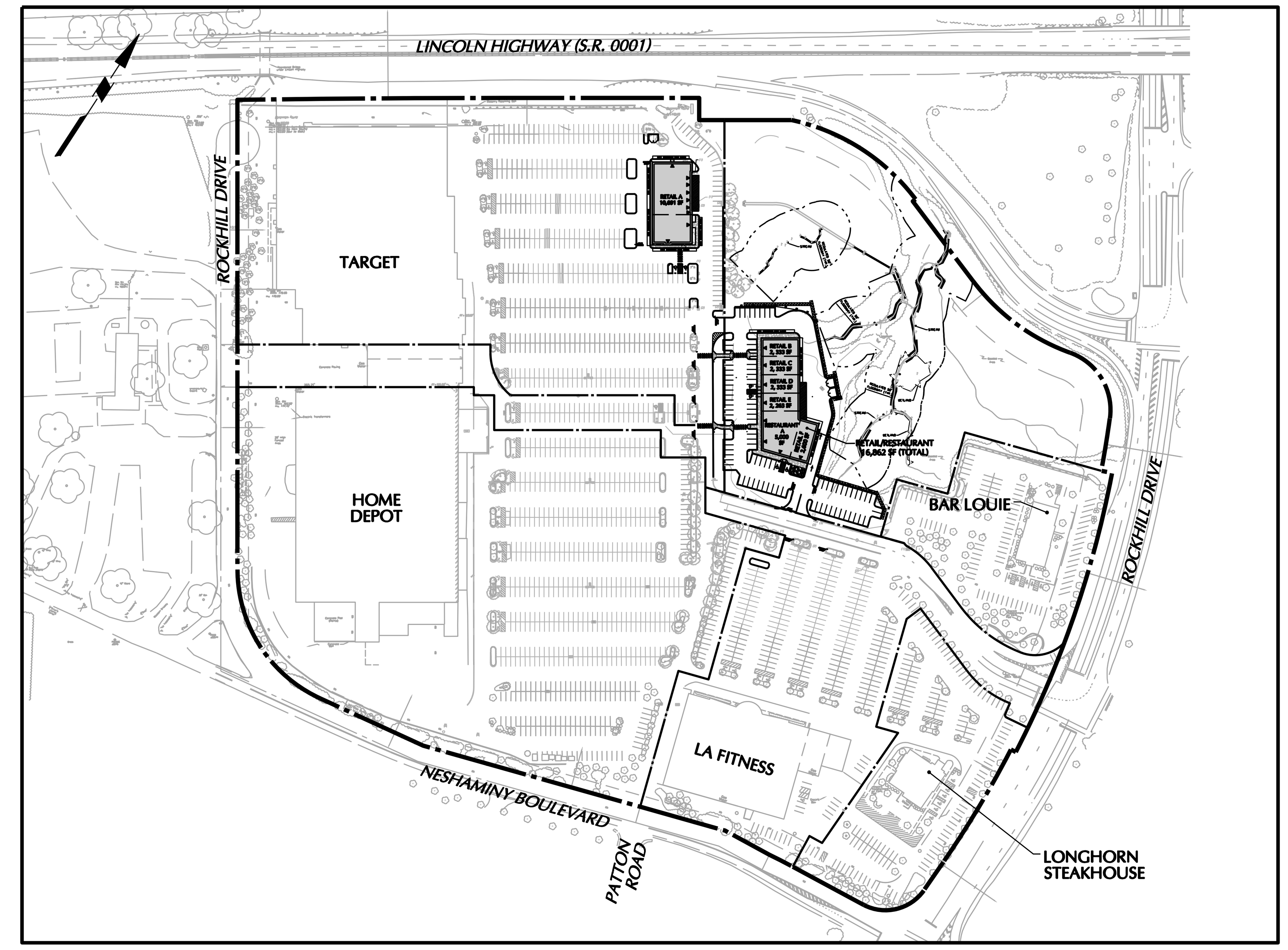

SITE MAP

1"=200'

OWNER'S CERTIFICATION

COMMONWEALTH OF PENNSYLVANIA: SS:
COUNTY OF BUCKS

________________________, UNDERSIGNED, HAS LAID OUT UPON MY LAND SITUATE IN BENSALEM TOWNSHIP, BUCKS COUNTY, PENNSYLVANIA, CERTAIN LOTS AND STREETS ACCORDING TO THE ACCOMPANYING PLAN WHICH IS INTENDED TO BE RECORDED.

______________ ________________________
DATE

ON THIS, ___ DAY OF _____________, 20___, BEFORE ME, A NOTARY PUBLIC, THE UNDERSIGNED OFFICER, PERSONALLY APPEARED ___________________, KNOWN TO BE (OR SATISFACTORILY PROVEN) TO BE THE PERSON WHOSE NAME IS SUBSCRIBED TO THE ACCOMPANYING CERTIFICATE AND ACKNOWLEDGED THAT HE/SHE EXECUTED THE SAME FOR THE PURPOSES THEREIN CONTAINED.

IN WITNESS WHEREOF, I HAVE HEREUNTO SET MY HAND AND OFFICIAL SEAL.

____
NOTARY PUBLIC

TOWNSHIP ENGINEER

THIS PLAN REVIEWED BY THE BENSALEM TOWNSHIP ENGINEER, THIS ____ DAY OF _________________20 ___

____
SIGNATURE DATE

TOWNSHIP PLANNING COMMISSION

THIS PLAN REVIEWED BY THE BENSALEM TOWNSHIP PLANNING COMMISSION, THIS ____ DAY OF _________________20 ___

____
SIGNATURE DATE

CORPORATE CERTIFICATION

COMMONWEALTH OF PENNSYLVANIA
COUNTY OF BUCKS

ON THE _______ DAY OF _________________,20____, BEFORE ME, THE SUBSCRIBER, A NOTARY PUBLIC OF THE COMMONWEALTH OF PENNSYLVANIA, RESIDING IN ___________________ PERSONALLY APPEARED ___________________________, WHO ACKNOWLEDGED HIMSELF/HERSELF TO BE THE ____________________ OF______________________, A CORPORATION, AND THAT AS SUCH BEING AUTHORIZED TO DO SO, HE/SHE EXECUTED THE FOREGOING PLAN BY SIGNING THE NAME OF SAID CORPORATION BY HIMSELF/HERSELF AS THAT SAID CORPORATION IS THE OWNER OF THE LAND SHOWN HEREON. ALL NECESSARY APPROVALS OF THIS PLAN HAVE BEEN OBTAINED AND IS ENDORSED THEREON AND SAID CORPORATION DESIRES THAT THIS PLAN BE DULY RECORDED.

_________________________ _________________________
NOTARY PUBLIC MY COMMISSION EXPIRES

I, _________________________, ACKNOWLEDGE MYSELF TO BE THE _________________________ OF ________________________________, A CORPORATION, AND THAT AS SUCH BEING AUTHORIZED TO DO SO, HEREBY CERTIFY THAT THE CORPORATION IS THE SOLE REGISTERED OWNER OF THE LAND HEREIN SUBDIVIDED AND THAT THERE ARE NO SUITS PENDING AFFECTING THE TITLE OF THE SAME AND THAT I DO HEREBY ADOPT THIS PLAN AND DESIRE THE SAME TO BE RECORDED. I DO FURTHER SAVE THE TOWNSHIP HARMLESS AND INDEMNIFY THE TOWNSHIP OF BENSALEM AGAINST ANY LIABILITY OR LOSS RESULTING FROM THE SUBDIVISION OR DEVELOPMENT OF THIS PLAT FOR WHATEVER REASON PRESENT OR FUTURE.

_________________________ _________________________
CORPORATE OFFICIAL OFFICE

APPROVAL BY GOVERNING BODY

APPROVED BY THE BENSALEM TOWNSHIP COUNCIL OF BENSALEM TOWNSHIP, BUCKS COUNTY, PENNSYLVANIA, ON THE _______ DAY OF ______________,20____.

____

____

____

BUCKS COUNTY PLANNING COMMISSION

THIS PLAN REVIEWED BY THE BUCKS COUNTY PLANNING COMMISSION THIS ___________ DAY OF ____________20 ___.

____
CHAIRMAN

____
SECRETARY

CERTIFICATE OF COUNTY RECORDER OF DEEDS

RECORDED IN THE OFFICE OF THE RECORDER OF DEEDS IN BUCKS COUNTY, PENNSYLVANIA, IN PLAN BOOK _______, PAGE ________, ON THE _____ DAY OF ____________20 ____.

____
SIGNATURE DATE

APPLICANT / OWNER:

PARAMOUNT REALTY SERVICES, INC.
1195 ROUTE 70
SUITE 2000
LAKEWOOD, NJ 08701
PHONE: (732) 961-8112

CIVIL ENGINEER:

LANGAN
ENGINEERING & ENVIRONMENTAL SERVICES
30 South 17th Street, Suite 1300
Philadelphia, PA 19103-4005
P: 215.864.0640 F: 215.864.0671
www.langan.com

NEW JERSEY **PENNSYLVANIA** NEW YORK CONNECTICUT
FLORIDA VIRGINIA CALIFORNIA
ABU DHABI DUBAI ATHENS DOHA ISTANBUL

GENERAL SITE NOTES:

1. THE CONTRACTOR SHALL FURNISH, INSTALL, TEST AND COMPLETE ALL WORK TO THE SATISFACTION OF THE ENGINEER AND OWNER IN ACCORDANCE WITH THE CONTRACT DOCUMENTS. THE CONTRACTOR IS SOLELY RESPONSIBLE FOR MEANS AND METHODS OF CONSTRUCTION; AS SUCH, THESE PLANS DO NOT COMPLETELY REPRESENT, NOR ARE THEY INTENDED TO REPRESENT, ALL SPECIFIC INSTRUCTIONS REQUIRED FOR SITEWORK CONSTRUCTION. THE CONTRACTOR IS RESPONSIBLE TO CONSTRUCT ALL IMPROVEMENTS DEPICTED ON THESE PLANS IN ACCORDANCE WITH ALL APPLICABLE RULES, REGULATIONS AND LAWS IN EFFECT AT THE TIME OF CONSTRUCTION.
2. THE CONTRACTOR SHALL ACCEPT THE SITE AS IS. THE CONTRACTOR SHALL ASSESS CONDITIONS, AND THE KIND, QUALITY AND QUANTITY OF WORK REQUIRED. THE OWNER AND ENGINEER MAKE NO GUARANTEE IN REGARD TO THE ACCURACY OF ANY INFORMATION THAT WAS OBTAINED DURING INVESTIGATIONS. THE CONTRACTOR SHALL: MAKE A THOROUGH SITE INSPECTION IN ORDER TO FIELD CHECK EXISTING SITE CONDITIONS; CORRELATE CONDITIONS WITH THE DRAWINGS; AND, RESOLVE ANY POSSIBLE CONSTRUCTION CONFLICTS WITH THE OWNER AND ENGINEER PRIOR TO COMMENCEMENT OF WORK. THE CONTRACTOR SHALL PERFORM ADDITIONAL TOPOGRAPHIC SURVEYS HE/SHE DEEMS NECESSARY, PROVIDED THEY ARE COORDINATED WITH THE OWNER. ANY CONDITIONS DETERMINED BY THE CONTRACTOR THAT DIFFER FROM THE INFORMATION SHOWN ON THE DRAWINGS THAT ARE NOT BROUGHT TO THE ATTENTION OF THE OWNER AND ENGINEER PRIOR TO THE START OF WORK SHALL NOT BE CONSIDERED GROUNDS FOR ADDITIONAL PAYMENT OR CHANGES TO THE CONTRACT DURATION, OR ANY OTHER CLAIMS AGAINST THE OWNER OR OWNER'S ENGINEER.
3. THE CONTRACTOR SHALL, WHEN HE/SHE DEEMS NECESSARY, PROVIDE A WRITTEN REQUEST FOR INFORMATION (RFI) TO THE OWNER AND/OR OWNER'S DESIGNATED REPRESENTATIVE, AND ENGINEER PRIOR TO THE CONSTRUCTION OF ANY SPECIFIC SITEWORK ITEM. THE (RFI) SHALL BE IN A FORM ACCEPTABLE TO OWNER AND/OR OWNER'S DESIGNATED REPRESENTATIVE, AND ENGINEER AND SHALL ALLOW FOR A MINIMUM OF THREE WORK DAYS FOR A WRITTEN REPLY. RFIS SHALL BE NUMBERED CONSECUTIVELY BY DATE SUBMITTED. THE CONTRACTOR SHALL BE SOLELY RESPONSIBLE FOR SITEWORK ITEMS CONSTRUCTED DIFFERENTLY THAN INTENDED OR AS DEPICTED ON THE PLANS.
4. INFORMATION RELATED TO ELEVATIONS AND PROPOSED UTILITIES (SUCH AS ROADWAY GRADES, INVERT ELEVATIONS, RIM ELEVATIONS, GRATE ELEVATIONS, BUILDING FINISHED FLOOR ELEVATIONS, ETC.) MAY BE FOUND IN MORE THAN ONE LOCATION IN THE CONTRACT DOCUMENTS. THE CONTRACTOR SHALL SUFFICIENTLY REVIEW ALL PLANS, PROFILES AND ANY OTHER INFORMATION IN THE CONTRACT DOCUMENTS FOR CONSISTENCY PRIOR TO BID. ANY INCONSISTENCIES OR DISCREPANCIES THAT ARE FOUND BY THE CONTRACTOR OR HIS ASSIGNS SHALL BE IMMEDIATELY BROUGHT TO THE ATTENTION OF THE OWNER AND ENGINEER IN WRITING, IN THE FORMAT OF AN RFI PRIOR TO BID.
5. THERE ARE ADDITIONAL NOTES, SPECIFICATIONS AND REQUIREMENTS CONTAINED THROUGHOUT THE PLAN SET AS WELL AS REFERENCES TO SPECIFICATIONS FROM APPLICABLE GOVERNING AUTHORITIES AND INDUSTRY STANDARDS. IT IS THE CONTRACTOR'S RESPONSIBILITY TO OBTAIN, REVIEW AND ADHERE TO ALL THESE DOCUMENTS.
6. CONTRACTOR IS SPECIFICALLY CAUTIONED THAT ALL CONSTRUCTION STAKEOUT FOR THIS PROJECT MUST BE COMPLETED FROM THE SITE SPECIFIC SURVEY CONTROL (HORIZONTAL AND VERTICAL) UPON WHICH THE DESIGN IS BASED. THE CONTRACTOR SHOULD NOT RELY ON OR RE-ESTABLISH SURVEY CONTROL BY GPS OR OTHER METHODS FOR USE IN CONSTRUCTION STAKEOUT OR ANY OTHER PURPOSE FOR THIS PROJECT. ANY DISCREPANCIES BETWEEN THE EXISTING HORIZONTAL OR VERTICAL DATA SHOWN ON THESE DRAWINGS AND THAT ENCOUNTERED IN THE FIELD MUST BE REPORTED TO THE DESIGN TEAM PRIOR TO CONSTRUCTION FOR RESOLUTION.

ACT 287 AS AMENDED

IT IS THE CONTRACTOR'S RESPONSIBILITY TO COMPLY WITH THE PENNSYLVANIA ACT 181 OF 2006 AND TO CONTACT THE "ONE CALL SYSTEM" THREE (3) WORKING DAYS (UNLESS OTHERWISE NOTED) PRIOR TO START OF CONSTRUCTION.

PENNSYLVANIA ONE CALL 1-800-242-1776

AQUA PENNSYLVANIA INC.
762 W LANCASTER AVE
BRYN MAWR, PA. 19010
(610) 562-1402

VERIZON PENNSYLVANIA
900 RACE STREET, 6TH FLOOR
PHILADELPHIA, PA 19107
(215) 351-8947

AT&T LOCAL SERVICES
2315 SALEM RD A10
CONYERS, GA. 33013
(770) 929-4584

COMCAST CABLE COMMUNICATIONS INC.
55 INDUSTRIAL DR
IVYLAND, PA. 18974
(215) 918-3137

PECO ENERGY COMPANY
400 PARK AVE
WARMINSTER, PA 18974
(215) 956-3121

BUCKS COUNTY WATER AND SEWER AUTHORITY
1275 ALMSHOUSE RD
WARRINGTON, PA 18976
(800) 222-2068

BENSALEM TOWNSHIP
3800 HULMEVILLE RD
BENSALEM, PA 19020
(215) 633-3733

CALL BEFORE YOU DIG
IN PA, TOLL FREE
1 - 800 - 242-1776
FOR FREE MARKOUTS TO LOCATE UNDERGROUND UTILITIES
" IT'S THE LAW "

BRIAN M. CONLON
PROFESSIONAL ENGINEER
PA Lic. No. PE061782

Date Submitted: 8 AUGUST 2016
Date Submitted: 24 JUNE 2016
Drawing No.
GI-001
SHEET 1 OF 29

© 2012 Langan Engineering and Environmental Services Inc.

Filename: \\langan.com\data\PH\data1\220048102\Cadd Data - 220048102\SheetFiles\2016.08.08 - NPDES Revised Submission\220048102-GI-001.dwg Date: 8/15/2016 Time: 09:01 User: ddonchez Style Table: Langan.stb Layout: GI-001

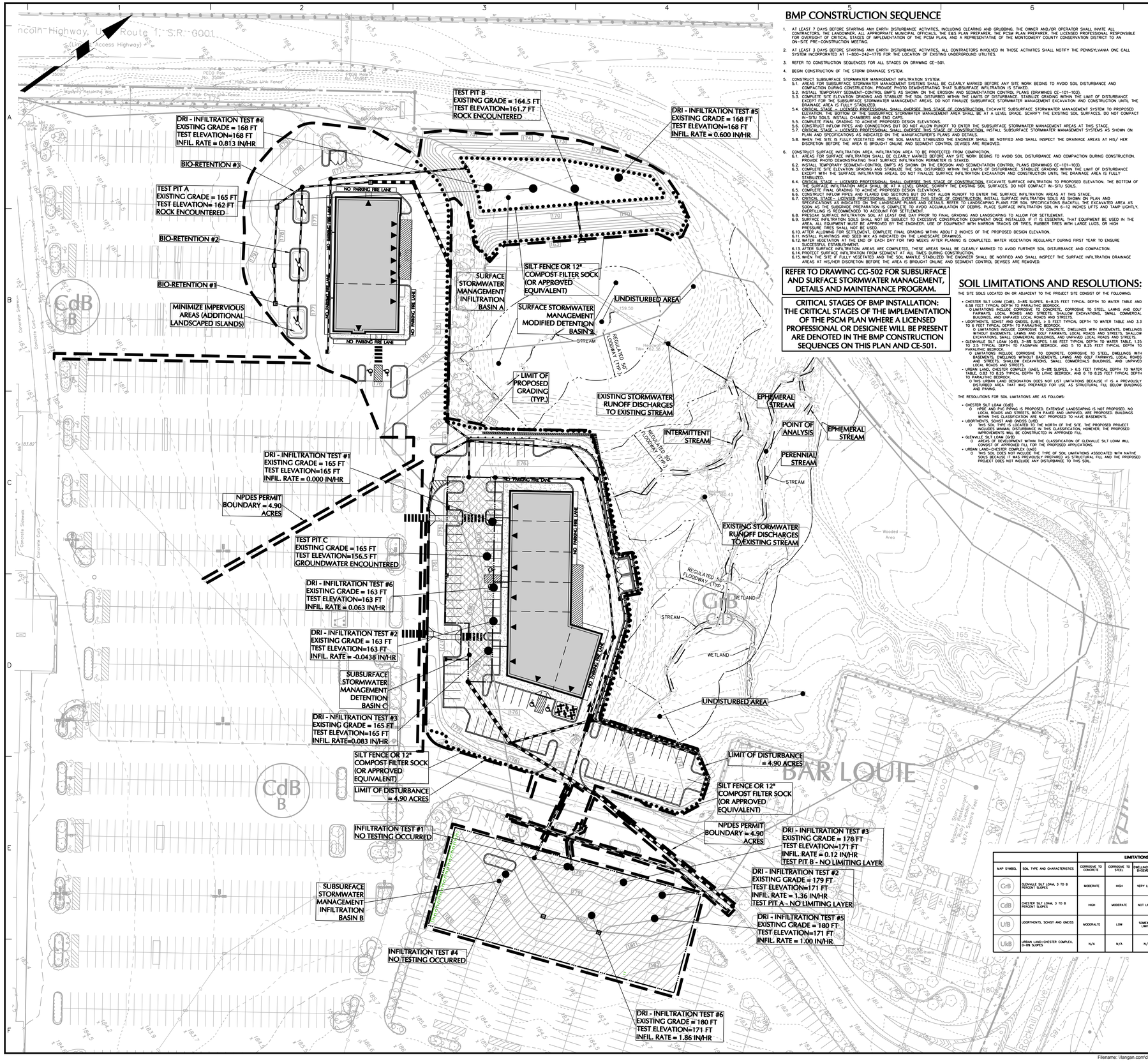

BMP CONSTRUCTION SEQUENCE

1. AT LEAST 7 DAYS BEFORE STARTING ANY EARTH DISTURBANCE ACTIVITIES, INCLUDING CLEARING AND GRUBBING, THE OWNER AND/OR OPERATOR SHALL INVITE ALL CONTRACTORS, THE LANDOWNER, ALL APPROPRIATE MUNICIPAL OFFICIALS, THE E&S PLAN PREPARER, THE PCSM PLAN PREPARER, THE LICENSED PROFESSIONAL RESPONSIBLE FOR OVERSIGHT OF CRITICAL STAGES OF IMPLEMENTATION OF THE PCSM PLAN, AND A REPRESENTATIVE OF THE MONTGOMERY COUNTY CONSERVATION DISTRICT TO AN ON-SITE PRE-CONSTRUCTION MEETING.
2. AT LEAST 3 DAYS BEFORE STARTING ANY EARTH DISTURBANCE ACTIVITIES, ALL CONTRACTORS INVOLVED IN THOSE ACTIVITIES SHALL NOTIFY THE PENNSYLVANIA ONE CALL SYSTEM INCORPORATED AT 1-800-242-1776 FOR THE LOCATION OF EXISTING UNDERGROUND UTILITIES.
3. REFER TO CONSTRUCTION SEQUENCES FOR ALL STAGES ON DRAWING CE-501.
4. BEGIN CONSTRUCTION OF THE STORM DRAINAGE SYSTEM.
5. CONSTRUCT SUBSURFACE STORMWATER MANAGEMENT INFILTRATION SYSTEM.
   5.1. AREAS FOR SUBSURFACE STORMWATER MANAGEMENT SYSTEMS SHALL BE CLEARLY MARKED BEFORE ANY SITE WORK BEGINS TO AVOID SOIL DISTURBANCE AND COMPACTION DURING CONSTRUCTION. PROVIDE PHOTO DEMONSTRATING THAT SUBSURFACE INFILTRATION IS STAKED.
   5.2. INSTALL TEMPORARY SEDIMENT-CONTROL BMP'S AS SHOWN ON THE EROSION AND SEDIMENTATION CONTROL PLANS (DRAWINGS CE-101-103).
   5.3. COMPLETE SITE ELEVATION GRADING AND STABILIZE THE SOIL DISTURBED WITHIN THE LIMITS OF DISTURBANCE, STABILIZE GRADING WITHIN THE LIMIT OF DISTURBANCE EXCEPT FOR THE SUBSURFACE STORMWATER MANAGEMENT AREAS. DO NOT FINALIZE SUBSURFACE STORMWATER MANAGEMENT EXCAVATION AND CONSTRUCTION UNTIL THE DRAINAGE AREA IS FULLY STABILIZED.
   5.4. CRITICAL STAGE – LICENSED PROFESSIONAL SHALL OVERSEE THIS STAGE OF CONSTRUCTION. EXCAVATE SUBSURFACE STORMWATER MANAGEMENT SYSTEM TO PROPOSED ELEVATION. THE BOTTOM OF THE SUBSURFACE STORMWATER MANAGEMENT AREA SHALL BE AT A LEVEL GRADE. SCARIFY THE EXISTING SOIL SURFACES. DO NOT COMPACT IN-SITU SOILS. INSTALL CHAMBERS AND END CAPS.
   5.5. COMPLETE FINAL GRADING TO ACHIEVE PROPOSED DESIGN ELEVATIONS.
   5.6. CONSTRUCT INFLOW PIPES AND CONNECTIONS BUT DO NOT ALLOW RUNOFF TO ENTER THE SUBSURFACE STORMWATER MANAGEMENT AREAS AT THIS STAGE.
   5.7. CRITICAL STAGE – LICENSED PROFESSIONAL SHALL OVERSEE THIS STAGE OF CONSTRUCTION. INSTALL SUBSURFACE STORMWATER MANAGEMENT SYSTEMS AS SHOWN ON PLAN AND SPECIFICATIONS AS INDICATED ON THE MANUFACTURER'S PLANS AND DETAILS.
   5.8. WHEN THE SITE IS FULLY VEGETATED AND THE SOIL MANTLE STABILIZED THE ENGINEER SHALL BE NOTIFIED AND SHALL INSPECT THE DRAINAGE AREAS AT HIS/ HER DISCRETION BEFORE THE AREA IS BROUGHT ONLINE AND SEDIMENT CONTROL DEVISES ARE REMOVED.
6. CONSTRUCT SURFACE INFILTRATION AREA. INFILTRATION AREA TO BE PROTECTED FROM COMPACTION.
   6.1. AREAS FOR SURFACE INFILTRATION SHALL BE CLEARLY MARKED BEFORE ANY SITE WORK BEGINS TO AVOID SOIL DISTURBANCE AND COMPACTION DURING CONSTRUCTION. PROVIDE PHOTO DEMONSTRATING THAT SURFACE INFILTRATION IS STAKED.
   6.2. INSTALL TEMPORARY SEDIMENT-CONTROL BMP'S AS SHOWN ON THE EROSION AND SEDIMENTATION CONTROL PLANS (DRAWINGS CE-101-103).
   6.3. COMPLETE SITE ELEVATION GRADING AND STABILIZE THE SOIL DISTURBED WITHIN THE LIMITS OF DISTURBANCE, STABILIZE GRADING WITHIN THE LIMIT OF DISTURBANCE EXCEPT WITH THE SURFACE INFILTRATION AREAS. DO NOT FINALIZE SURFACE INFILTRATION EXCAVATION AND CONSTRUCTION UNTIL THE DRAINAGE AREA IS FULLY STABILIZED.
   6.4. CRITICAL STAGE – LICENSED PROFESSIONAL SHALL OVERSEE THIS STAGE OF CONSTRUCTION. EXCAVATE SURFACE INFILTRATION TO PROPOSED ELEVATION. THE BOTTOM OF THE SURFACE INFILTRATION AREA SHALL BE AT A LEVEL GRADE. SCARIFY THE EXISTING SOIL SURFACES. DO NOT COMPACT IN-SITU SOILS.
   6.5. COMPLETE FINAL GRADING TO ACHIEVE PROPOSED DESIGN ELEVATIONS.
   6.6. CONSTRUCT INFLOW PIPES AND FLARED END SECTIONS BUT DO NOT ALLOW RUNOFF TO ENTER THE SURFACE INFILTRATION AREAS AT THIS STAGE.
   6.7. CRITICAL STAGE – LICENSED PROFESSIONAL SHALL OVERSEE THIS STAGE OF CONSTRUCTION. INSTALL SURFACE INFILTRATION SOILS AS SHOWN ON PLAN AND SPECIFICATIONS AS INDICATED ON THE LANDSCAPE PLANS AND DETAILS. REFER TO LANDSCAPING PLANS FOR SOIL SPECIFICATIONS BASOFAL THE EXCAVATED AREA AS SOON AS THE SUBGRADE PREPARATION IS COMPLETE TO AVOID ACCUMULATION OF DEBRIS. PLACE SURFACE INFILTRATION SOIL IN 6-12 INCHES LIFTS AND TAMP LIGHTLY. OVERFILLING IS RECOMMENDED TO ACCOUNT FOR SETTLEMENT.
   6.8. PRESOAK SURFACE INFILTRATION SOIL AT LEAST ONE DAY PRIOR TO FINAL GRADING AND LANDSCAPING TO ALLOW FOR SETTLEMENT.
   6.9. SURFACE INFILTRATION SOILS SHALL NOT BE SUBJECT TO EXCESSIVE CONSTRUCTION EQUIPMENT ONCE INSTALLED. IF IT IS ESSENTIAL THAT EQUIPMENT BE USED IN THE AREA, ALL EQUIPMENT MUST BE APPROVED BY THE ENGINEER. USE OF EQUIPMENT WITH NARROW TRACKS OR TIRES, RUBBER TIRES WITH LARGE LUGS, OR HIGH PRESSURE TIRES SHALL NOT BE USED.
   6.10. AFTER PLANTING IS COMPLETED, COMPLETE FINAL GRADING WITHIN ABOUT 2 INCHES OF THE PROPOSED DESIGN ELEVATION.
   6.11. INSTALL PLANTINGS AND MULCH AS INDICATED ON THE LANDSCAPE DRAWINGS.
   6.12. WATER VEGETATION AT THE END OF EACH DAY FOR THE NEXT SEVEN DAYS AFTER PLANTING IS COMPLETED. WATER VEGETATION REGULARLY DURING FIRST YEAR TO ENSURE SUCCESSFUL ESTABLISHMENT.
   6.13. AFTER SURFACE INFILTRATION AREAS ARE COMPLETED, THESE AREAS SHALL BE CLEARLY MARKED TO AVOID FURTHER SOIL DISTURBANCE AND COMPACTION.
   6.14. PROTECT SURFACE INFILTRATION FROM SEDIMENT AT ALL TIMES DURING CONSTRUCTION.
   6.15. WHEN THE SITE IS FULLY VEGETATED AND THE SOIL MANTLE STABILIZED THE ENGINEER SHALL BE NOTIFIED AND SHALL INSPECT THE SURFACE INFILTRATION DRAINAGE AREAS AT HIS/HER DISCRETION BEFORE THE AREA IS BROUGHT ONLINE AND SEDIMENT CONTROL DEVISES ARE REMOVED.

REFER TO DRAWING CG-502 FOR SUBSURFACE AND SURFACE STORMWATER MANAGEMENT, DETAILS AND MAINTENANCE PROGRAM.

CRITICAL STAGES OF BMP INSTALLATION: THE CRITICAL STAGES OF THE IMPLEMENTATION OF THE PSCM PLAN WHERE A LICENSED PROFESSIONAL OR DESIGNEE WILL BE PRESENT ARE DENOTED IN THE BMP CONSTRUCTION SEQUENCES ON THIS PLAN AND CE-501.

SOIL LIMITATIONS AND RESOLUTIONS:

THE SITE SOILS LOCATED ON OR ADJACENT TO THE PROJECT SITE CONSIST OF THE FOLLOWING:

- CHESTER SILT LOAM (CdB), 3-8% SLOPES, 6-8.25 FEET TYPICAL DEPTH TO WATER TABLE AND 6.58 FEET TYPICAL DEPTH TO PARALITHIC BEDROCK.
  - LIMITATIONS INCLUDE CORROSIVE TO CONCRETE, CORROSIVE TO STEEL, LAWNS AND GOLF FAIRWAYS, LOCAL ROADS AND STREETS, SHALLOW EXCAVATIONS, SMALL COMMERCIAL BUILDINGS, AND UNPAVED LOCAL ROADS AND STREETS.
- UDORTHENTS, SCHIST AND GNEISS (UrB), > 6.5 FEET TYPICAL DEPTH TO WATER TABLE AND 3.3 TO 6.25 FEET TYPICAL DEPTH TO PARALITHIC BEDROCK.
  - LIMITATIONS INCLUDE CORROSIVE TO CONCRETE, DWELLINGS WITH BASEMENTS, DWELLINGS WITHOUT BASEMENTS, LAWNS AND GOLF FAIRWAYS, LOCAL ROADS AND STREETS, SHALLOW EXCAVATIONS, SMALL COMMERCIAL BUILDINGS, AND UNPAVED LOCAL ROADS AND STREETS.
- GLENVILLE SILT LOAM (GrB), 3-8% SLOPES, 1.66 FEET TYPICAL DEPTH TO WATER TABLE, 1.25 TO 2.5 TYPICAL DEPTH TO FAGNPAN BEDROCK, AND 5 TO 8.25 FEET TYPICAL DEPTH TO PARALITHIC BEDROCK.
  - LIMITATIONS INCLUDE CORROSIVE TO CONCRETE, CORROSIVE TO STEEL, DWELLINGS WITH BASEMENTS, DWELLINGS WITHOUT BASEMENTS, LAWNS AND GOLF FAIRWAYS, LOCAL ROADS AND STREETS, SHALLOW EXCAVATIONS, SMALL COMMERCIALS BUILDINGS, AND UNPAVED LOCAL ROADS AND STREETS.
- URBAN LAND, CHESTER COMPLEX (UkB), 0-8% SLOPES, > 6.5 FEET TYPICAL DEPTH TO WATER TABLE, 0.83 TO 8.25 TYPICAL DEPTH TO LITHIC BEDROCK, AND 8.16 TO 8.25 FEET TYPICAL DEPTH TO PARALITHIC BEDROCK.
  - THIS URBAN LAND DESIGNATION DOES NOT LIST LIMITATIONS BECAUSE IT IS A PREVIOUSLY DISTURBED AREA THAT WAS PREPARED FOR USE AS STRUCTURAL FILL BELOW BUILDINGS AND PAVING.

THE RESOLUTIONS FOR SOIL LIMITATIONS ARE AS FOLLOWS:

- CHESTER SILT LOAM (CdB)
  - HPDE AND PVC PIPING IS PROPOSED. EXTENSIVE LANDSCAPING IS NOT PROPOSED. NO LOCAL ROADS AND STREETS, BOTH PAVED AND UNPAVED, ARE PROPOSED. BUILDINGS WITHIN THIS CLASSIFICATION ARE NOT PROPOSED TO HAVE BASEMENTS.
- UDORTHENTS, SCHIST AND GNEISS (UrB)
  - THIS SOIL TYPE IS LOCATED TO THE NORTH OF THE SITE. THE PROPOSED PROJECT INCLUDES MINIMAL DISTURBANCE IN THIS CLASSIFICATION; HOWEVER, THE PROPOSED BUILDINGS WILL BE CONSTRUCTED IN APPROVED FILL.
- GLENVILLE SILT LOAM (GrB)
  - AREAS OF DEVELOPMENT WITHIN THE CLASSIFICATION OF GLENVILLE SILT LOAM WILL CONSIST OF APPROVED FILL FOR THE PROPOSED APPLICATIONS.
- URBAN LAND-CHESTER COMPLEX (UkB)
  - THIS SOIL DOES NOT INCLUDE THE TYPE OF SOIL LIMITATIONS ASSOCIATED WITH NATIVE SOILS BECAUSE IT WAS PREVIOUSLY PREPARED AS STRUCTURAL FILL AND THE PROPOSED PROJECT DOES NOT INCLUDE ANY DISTURBANCE TO THIS SOIL.

MAP SYMBOL	SOIL TYPE AND CHARACTERISTICS	LIMITATIONS (SEE "SOIL LIMITATIONS AND RESOLUTIONS" NOTES FOR RESOLUTIONS)								TYPICAL DEPTHS	
		CORROSIVE TO CONCRETE	CORROSIVE TO STEEL	DWELLINGS WITH BASEMENTS	DWELLINGS WITHOUT BASEMENTS	LAWNS, LANDSCAPING, AND GOLF FAIRWAYS	LOCAL ROADS AND STREETS	SHALLOW EXCAVATIONS	SMALL COMMERCIAL BUILDINGS	UNPAVED LOCAL ROADS AND STREETS	DEPTH TO WATER TABLE	DEPTH TO BEDROCK
GrB	GLENVILLE SILT LOAM, 3 TO 8 PERCENT SLOPES	MODERATE	HIGH	VERY LIMITED	SOMEWHAT LIMITED	SOMEWHAT LIMITED	VERY LIMITED	VERY LIMITED	SOMEWHAT LIMITED	VERY LIMITED	6" TO 36"	15" TO 30" TO FRAGIPAN 60" TO 99" TO PARALITHIC
CdB	CHESTER SILT LOAM, 3 TO 8 PERCENT SLOPES	HIGH	MODERATE	NOT LIMITED	NOT LIMITED	SOMEWHAT LIMITED	VERY LIMITED	SOMEWHAT LIMITED	SOMEWHAT LIMITED	VERY LIMITED	>80"	> 80"
UfB	UDORTHENTS, SCHIST AND GNEISS	MODERATE	LOW	SOMEWHAT LIMITED	SOMEWHAT LIMITED	SOMEWHAT LIMITED	VERY LIMITED	SOMEWHAT LIMITED	SOMEWHAT LIMITED	SOMEWHAT LIMITED	60"	40" TO 72" TO PARALITHIC
UkB	URBAN LAND-CHESTER COMPLEX, 0-8% SLOPES	N/A	N/A	N/A	N/A	N/A	N/A	N/A	N/A	N/A	>80"	72" TO 99" TO PARALITHIC

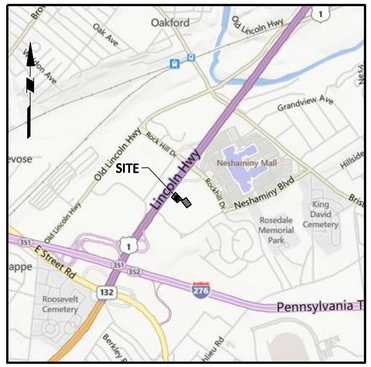

LOCATION MAP

1"=2000'

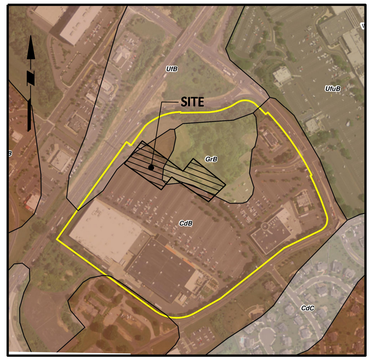

SOIL MAP

1"=500'

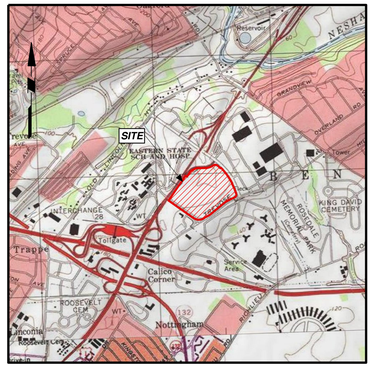

USGS MAP

1"=2000'

NOTES:

1. SITE ADDRESS:

   US 1 AND ROCKHILL DRIVE
   BENSALEM, PA 19020

2. APPLICANT:

   PARAMOUNT REALTY SERVICES, INC.
   1195 ROUTE 70
   BENSALEM TOWNSHIP, PA 19020

3. RECYCLING AND DISPOSAL OF WASTES AND BUILDING MATERIALS SHALL BE DONE IN ACCORDANCE WITH THE SOLID WASTE MANAGEMENT REGULATIONS IN 25 PA CODE 260.1 ET SEQ., 271.1 ET SEQ. THE CONTRACTOR SHALL NOT ILLEGALLY BURY, DUMP, OR DISCHARGE ANY BUILDING MATERIAL OR WASTES AT THIS SITE.
4. PROJECT WASTES MAY INCLUDE CONCRETE, ASPHALT, TOPSOIL DETERGENTS, PAINTS, CLEANING SOLVENTS, PESTICIDES, WOOD SCRAPS, FERTILIZERS AND PETROLEUM BASED PRODUCTS.

LEGEND

- 48 — EXISTING CONTOUR
- D — EXISTING STORM PIPE
- EXISTING STORM INLET
- EXISTING STORM MANHOLE
- S — EXISTING SANITARY SEWER
- W — EXISTING WATER
- G — EXISTING GAS
- T&E — EXISTING TELEPHONE/ELECTRIC
- + 44.25 — PROPOSED SPOT ELEVATION
- 48 — PROPOSED CONTOUR
- PROPOSED STORM PIPE
- PROPOSED STORM INLET
- PROPOSED STORM MANHOLE
- PROPOSED SAWCUT LINE
- SUBSURFACE STORMWATER INFILTRATION FACILITY
- SUBSURFACE STORMWATER DETENTION FACILITY

PENNSYLVANIA ONE CALL SYSTEM, INC. 1-800-242-1776 STOP - CALL BEFORE YOU DIG

CALL BEFORE YOU DIG IN PA, TOLL FREE
1 - 800 - 242-1776
FOR FREE MARKOUTS TO LOCATE UNDERGROUND UTILITIES
" IT'S THE LAW "

Date	Description	No.
8/8/2016	REVISIONS PER TOWNSHIP AND COUNTY COMMENTS	1.

REVISIONS

BRIAN M. CONLON — DATE
PROFESSIONAL ENGINEER
PA Lic. No. PE061782

LANGAN
30 South 17th Street, Suite 1300, Philadelphia, PA 19103
T: 215.864.0640 F: 215.864.0671 www.langan.com
NEW JERSEY NEW YORK CONNECTICUT PENNSYLVANIA OHIO VIRGINIA WASHINGTON DC FLORIDA NORTH DAKOTA CALIFORNIA
ABU DHABI ATHENS DOHA DUBAI ISTANBUL
Langan Engineering, Environmental, Surveying and Landscape Architecture, D.P.C.
Langan Engineering and Environmental Services, Inc.
Langan CT, Inc.
Langan International LLC
Collectively known as Langan

Project

THE MARKETPLACE AT NESHAMINY

BENSALEM TOWNSHIP
BUCKS COUNTY — PENNSYLVANIA

Drawing Title

POST-CONSTRUCTION STORMWATER MANAGEMENT PLAN

Project No. 220048102	Drawing No. CG-101
Date 24 JUNE 2016	
Scale 1"=50'	
Drawn By TFH	
Checked By BMC	SHEET 10 OF 29

50 0 25 50
SCALE IN FEET

©2016 Langan

GENERAL SITE NOTES:

1. THE CONTRACTOR SHALL FURNISH, INSTALL, TEST AND COMPLETE ALL WORK TO THE SATISFACTION OF THE ENGINEER AND OWNER IN ACCORDANCE WITH THE CONTRACT DOCUMENTS. THE CONTRACTOR IS SOLELY RESPONSIBLE FOR MEANS AND METHODS OF CONSTRUCTION; AS SUCH, THESE PLANS DO NOT COMPLETELY REPRESENT, NOR ARE THEY INTENDED TO REPRESENT, ALL SPECIFIC INSTRUCTIONS REQUIRED FOR SITEWORK CONSTRUCTION. THE CONTRACTOR IS RESPONSIBLE TO CONSTRUCT ALL IMPROVEMENTS DEPICTED ON THESE PLANS IN ACCORDANCE WITH ALL APPLICABLE RULES, REGULATIONS AND LAWS IN EFFECT AT THE TIME OF CONSTRUCTION.
2. THE CONTRACTOR SHALL ACCEPT THE SITE AS IS. THE CONTRACTOR SHALL ASSESS CONDITIONS, AND THE KIND, QUALITY AND QUANTITY OF WORK REQUIRED. THE OWNER AND ENGINEER MAKE NO GUARANTEE IN REGARD TO THE ACCURACY OF ANY INFORMATION THAT WAS OBTAINED DURING INVESTIGATIONS. THE CONTRACTOR SHALL: MAKE A THOROUGH SITE INSPECTION IN ORDER TO FIELD CHECK EXISTING SITE CONDITIONS; CORRELATE CONDITIONS WITH THE DRAWINGS; AND, RESOLVE ANY POSSIBLE CONSTRUCTION CONFLICTS WITH THE OWNER AND ENGINEER PRIOR TO COMMENCEMENT OF WORK. THE CONTRACTOR SHALL PERFORM ADDITIONAL TOPOGRAPHIC SURVEYS HE/SHE DEEMS NECESSARY, PROVIDED THEY ARE COORDINATED WITH THE OWNER. ANY CONDITIONS DETERMINED BY THE CONTRACTOR THAT DIFFER FROM THE INFORMATION SHOWN ON THE DRAWINGS THAT ARE NOT BROUGHT TO THE ATTENTION OF THE OWNER AND ENGINEER PRIOR TO THE START OF WORK SHALL NOT BE CONSIDERED GROUNDS FOR ADDITIONAL PAYMENT OR CHANGES TO THE CONTRACT DURATION, OR ANY OTHER CLAIMS AGAINST THE OWNER OR OWNER'S ENGINEER.
3. THE CONTRACTOR SHALL, WHEN HE/SHE DEEMS NECESSARY, PROVIDE A WRITTEN REQUEST FOR INFORMATION (RFI) TO THE OWNER AND/OR OWNER'S DESIGNATED REPRESENTATIVE, AND ENGINEER PRIOR TO THE CONSTRUCTION OF ANY SPECIFIC SITEWORK ITEM. THE (RFI) SHALL BE IN A FORM ACCEPTABLE TO OWNER AND/OR OWNER'S DESIGNATED REPRESENTATIVE, AND ENGINEER AND SHALL ALLOW FOR A MINIMUM OF THREE WORK DAYS FOR A WRITTEN REPLY. RFIS SHALL BE NUMBERED CONSECUTIVELY BY DATE SUBMITTED. THE CONTRACTOR SHALL BE SOLELY RESPONSIBLE FOR SITEWORK ITEMS CONSTRUCTED DIFFERENTLY THAN INTENDED OR AS DEPICTED ON THE PLANS.
4. INFORMATION RELATED TO ELEVATIONS AND PROPOSED UTILITIES (SUCH AS ROADWAY GRADES, INVERT ELEVATIONS, RIM ELEVATIONS, GRATE ELEVATIONS, BUILDING FINISHED FLOOR ELEVATIONS, ETC.) MAY BE FOUND IN MORE THAN ONE LOCATION IN THE CONTRACT DOCUMENTS. THE CONTRACTOR SHALL SUFFICIENTLY REVIEW ALL PLANS, PROFILES AND ANY OTHER INFORMATION IN THE CONTRACT DOCUMENTS FOR CONSISTENCY PRIOR TO BID. ANY INCONSISTENCIES OR DISCREPANCIES THAT ARE FOUND BY THE CONTRACTOR OR HIS ASSIGNS SHALL BE IMMEDIATELY BROUGHT TO THE ATTENTION OF THE OWNER AND ENGINEER IN WRITING, IN THE FORMAT OF AN RFI PRIOR TO BID.
5. THERE ARE ADDITIONAL NOTES, SPECIFICATIONS AND REQUIREMENTS CONTAINED THROUGHOUT THE PLAN SET AS WELL AS REFERENCES TO SPECIFICATIONS FROM APPLICABLE GOVERNING AUTHORITIES AND INDUSTRY STANDARDS. IT IS THE CONTRACTOR'S RESPONSIBILITY TO OBTAIN, REVIEW AND ADHERE TO ALL THESE DOCUMENTS.
6. CONTRACTOR IS SPECIFICALLY CAUTIONED THAT ALL CONSTRUCTION STAKEOUT FOR THIS PROJECT MUST BE COMPLETED FROM THE SITE SPECIFIC SURVEY CONTROL (HORIZONTAL AND VERTICAL) UPON WHICH THE DESIGN IS BASED. THE CONTRACTOR SHOULD NOT RELY ON OR RE-ESTABLISH SURVEY CONTROL BY GPS OR OTHER METHODS FOR USE IN CONSTRUCTION STAKEOUT OR ANY OTHER PURPOSE FOR THIS PROJECT. ANY DISCREPANCIES BETWEEN THE EXISTING HORIZONTAL OR VERTICAL DATA SHOWN ON THESE DRAWINGS AND THAT ENCOUNTERED IN THE FIELD MUST BE REPORTED TO THE DESIGN TEAM PRIOR TO CONSTRUCTION FOR RESOLUTION.

LEGEND

Symbol	Description
48	*EXISTING CONTOUR*
D	*EXISTING STORM PIPE*
	EXISTING STORM INLET
S	*EXISTING STORM MANHOLE*
S	*EXISTING SANITARY SEWER*
W	*EXISTING WATER*
G	*EXISTING GAS*
T&E	*EXISTING TELEPHONE/ELECTRIC*
+ 44.25	PROPOSED SPOT ELEVATION
48	PROPOSED CONTOUR
	PROPOSED STORM PIPE
	PROPOSED STORM INLET
	PROPOSED STORM MANHOLE
	PROPOSED SAWCUT LINE
	SUBSURFACE STORMWATER INFILTRATION FACILITY
	SUBSURFACE STORMWATER DETENTION FACILITY

MINIMIZE SOIL COMPACTION

MINIMIZE LAND CLEARING AND GRADING

MAXIMIZE THE PROTECTION OF EXISTING DRAINAGE FEATURES AND EXISTING VEGETATION

SPOT ELEVATIONS SHOWN OFFSET FROM THE CURB AND GUTTER LINES ARE THE ELEVATIONS ALONG SAID LINES AND ARE SHOWN OFFSET FOR GRAPHICAL PURPOSES ONLY.

SPOT ELEVATIONS PROVIDED REPRESENT BOTTOM OF CURB ELEVATIONS. TOP OF CURB ELEVATIONS ARE PLUS 0.5' ABOVE BOTTOM OF CURB UNLESS OTHERWISE NOTED.

ALL STORM SEWER PIPE LENGTHS ARE MEASURED FROM CENTER OF STRUCTURES AND REPRESENT LINEAR FOOTAGE.

BEDDING AND BACKFILL REQUIREMENTS FOR HDPE PIPE TO BE IN ACCORDANCE WITH THE MANUFACTURER'S RECOMMENDATIONS AND AS SHOWN ON DRAWING CG-501.

THE CONTRACTOR SHALL REFER TO ARCHITECTURAL PLANS AND SPECIFICATIONS FOR FINAL BUILDING FOOTPRINTS, UTILITIES AND GRADING INFORMATION.

REFER TO DRAWINGS CG-501 CG-502 FOR STORM SEWER NOTES AND DETAILS

THE STORMWATER FACILITIES SHOWN ON THESE PLANS ARE A BASIC AND PERPETUAL PART OF THE STORMWATER MANAGEMENT SYSTEM OF THE PROPOSED SITE LOCATED IN BENSALEM TOWNSHIP, BUCKS COUNTY, COMMONWEALTH OF PENNSYLVANIA, AND SUCH ARE TO BE PROTECTED AND PRESERVED IN ACCORDANCE WITH THE APPROVED FINAL PLANS BY THE OWNERS, THEIR SUCCESSORS AND ASSIGNS OF THESE LANDS. BENSALEM TOWNSHIP AND/OR ITS AGENTS RESERVE THE RIGHT AND PRIVILEGE TO ENTER UPON THESE LANDS FROM TIME TO TIME FOR THE INSPECTION OF THESE FACILITIES IN ORDER TO DETERMINE THAT PROPER OPERATION AND MAINTENANCE AND THAT THE STRUCTURAL AND DESIGN INTEGRITY IS BEING MAINTAINED BY THE OWNER

ACT 287 AS AMENDED

IT IS THE CONTRACTOR'S RESPONSIBILITY TO COMPLY WITH THE PENNSYLVANIA ACT 181 OF 2006 AND TO CONTACT THE "ONE CALL SYSTEM" THREE (3) WORKING DAYS (UNLESS OTHERWISE NOTED) PRIOR TO START OF CONSTRUCTION.

PENNSYLVANIA ONE CALL 1-800-242-1776
SERIAL NO. 20101102688

AQUA PENNSYLVANIA INC.
762 W LANCASTER AVE
BRYN MAWR, PA. 19010
(610) 562-1402

VERIZON PENNSYLVANIA
900 RACE STREET, 6TH FLOOR
PHILADELPHIA, PA 19107
(215) 351-8947

AT&T LOCAL SERVICES
2315 SALEM RD A10
CONYERS, GA. 33013
(770) 929-4584

COMCAST CABLE COMMUNICATIONS INC.
55 INDUSTRIAL DR
IVYLAND, PA. 18974
(215) 918-3137

PECO ENERGY COMPANY
400 PARK AVE
WARMINSTER, PA 18974
(215) 956-3121

BUCKS COUNTY WATER AND SEWER AUTHORITY
1275 ALMSHOUSE RD
WARRINGTON, PA 18976
(800) 222-2068

BENSALEM TOWNSHIP
3800 HULMEVILLE RD
BENSALEM, PA 19020
(215) 633-3733

CALL BEFORE YOU DIG IN PA, TOLL FREE
1 - 800 - 242-1776
FOR FREE MARKOUTS TO LOCATE UNDERGROUND UTILITIES
" IT'S THE LAW "

GRADING AND DRAINAGE NOTES:

1. NO TOPSOIL SHALL BE REMOVED FROM THE SITE OR USED AS SPOIL. TOPSOIL MOVED DURING THE COURSE OF CONSTRUCTION SHALL BE REDISTRIBUTED SO AS TO PROVIDE AT LEAST SIX (6) INCHES OF COVER TO ALL VEGETATED AREAS OF THE SITE AND SHALL BE STABILIZED BY SEEDING OR PLANTING.
2. THE EROSION AND SEDIMENTATION CONTROL PLAN IS AN INTEGRAL PART OF THE STORMWATER MANAGEMENT SYSTEM DURING CONSTRUCTION OF CERTAIN PHASES. THE EROSION AND SEDIMENTATION CONTROL PLANS SHALL BE REFERENCED AND USED IN CONJUNCTION WITH THIS DRAWING TO COMPLETE CONSTRUCTION PHASING.
3. LOCATIONS OF EXISTING UTILITIES SHOWN HEREON HAVE BEEN DEVELOPED FROM EXISTING RECORDS AND/OR ABOVE-GROUND OBSERVATIONS AT THE SITE. COMPLETENESS OR ACCURACY OF LOCATIONS AND DEPTH CANNOT BE GUARANTEED. ALL CONTRACTORS AND OTHER PERSONS UTILIZING THIS PLAN AND THE INFORMATION CONTAINED THEREON ARE CAUTIONED THAT EACH INDIVIDUAL USING THIS PLAN MUST VERIFY THE LOCATION AND DEPTH OF ALL UNDERGROUND UTILITIES AND FACILITIES BEFORE STARTING WORK.
4. SITE GRADING SHALL NOT PROCEED UNTIL EROSION CONTROL MEASURES HAVE BEEN INSTALLED.
5. THE SITE IS TO BE GRADED SMOOTHLY AND EVENLY IN ACCORDANCE WITH THE PROPOSED CONTOURS AND SPOT ELEVATIONS. THE CONTRACTOR IS RESPONSIBLE FOR ENSURING A POSITIVE DRAINAGE FLOW TO ALL CATCH BASINS WITHOUT CREATING ANY FLAT SPOTS THAT WILL RESULT IN STANDING WATER (PUDDLING OR PONDING).
6. ALL PERISHABLE AND OTHER ORGANIC MATTER SHALL BE REMOVED FROM THE CONSTRUCTION SITE. REFER TO THE DEMOLITION PLAN, DRAWING CD-101, FOR ALL EXISTING FEATURES TO BE REMOVED.
7. CONTRACTOR IS RESPONSIBLE FOR DEMOLITION OF EXISTING STRUCTURES INCLUDING REMOVAL OF ANY EXISTING UTILITIES SERVING THE STRUCTURE. UTILITIES ARE TO BE REMOVED TO THE RIGHT-OF-WAY.
8. THE CONTRACTOR IS SPECIFICALLY CAUTIONED THAT THE LOCATION AND/OR ELEVATION OF EXISTING UTILITIES AS SHOWN ON THESE PLANS IS BASED ON RECORDS OF THE VARIOUS UTILITY COMPANIES, AND WHERE POSSIBLE, MEASUREMENTS TAKEN IN THE FIELD. THE INFORMATION IS NOT TO BE RELIED ON AS BEING EXACT OR COMPLETE. THE CONTRACTOR MUST CALL THE APPROPRIATE UTILITY COMPANIES AT LEAST 72 HOURS BEFORE ANY EXCAVATION TO REQUEST EXACT FIELD LOCATION OF UTILITIES. IT SHALL BE THE RESPONSIBILITY OF THE CONTRACTOR TO RELOCATE ALL EXISTING UTILITIES WHICH CONFLICT WITH THE PROPOSED IMPROVEMENTS SHOWN ON THE PLANS.
9. ALL CUT OR FILL SLOPES SHALL BE 3:1 OR FLATTER UNLESS OTHERWISE NOTED.
10. EXISTING DRAINAGE STRUCTURES TO BE INSPECTED BY CONTRACTOR AND REPAIRED AS NEEDED, AND EXISTING PIPES TO BE CLEANED OUT TO REMOVE ALL SILT AND DEBRIS.
11. EXISTING AND PROPOSED GRADE CONTOUR INTERVALS SHOWN AT 1 FOOT.
12. IF ANY EXISTING STRUCTURES TO REMAIN ARE DAMAGED DURING CONSTRUCTION IT SHALL BE THE CONTRACTORS RESPONSIBILITY TO REPAIR AND/OR REPLACE THE EXISTING STRUCTURE AS NECESSARY TO RETURN IT TO EXISTING CONDITIONS OR BETTER.
13. THE CONTRACTOR SHALL ADHERE TO ALL TERMS & CONDITIONS AS OUTLINED IN THE GENERAL N.P.D.E.S. PERMIT FOR STORMWATER DISCHARGE ASSOCIATED WITH CONSTRUCTION ACTIVITIES.
14. CONTRACTOR SHALL ADJUST AND/OR CUT EXISTING PAVEMENT AS NECESSARY TO ASSURE A SMOOTH FIT AND CONTINUOUS GRADE.
15. PAVEMENT SHALL BE SAW CUT IN STRAIGHT LINES TO THE FULL DEPTH OF THE EXISTING PAVEMENT. ALL DEBRIS FROM REMOVAL AND GRADING SHALL BE REMOVED IMMEDIATELY. STOCKPILING OF DEBRIS IS NOT PERMITTED.
16. CONTRACTOR SHALL ASSURE POSITIVE DRAINAGE AWAY FROM BUILDINGS FOR ALL NATURAL AND PAVED AREAS.
17. TOPOGRAPHIC AND PLANIMETRICS INFORMATION OBTAINED FROM GROUND SURVEYS BY LANGAN ENGINEERING AND ENVIRONMENTAL SERVICES, INC. COMPLETED DURING JULY AND AUGUST 2014. IF CONTRACTOR DOES NOT ACCEPT EXISTING TOPOGRAPHY AS SHOWN ON THE PLANS, WITHOUT EXCEPTION, HE SHALL HAVE MADE, AT HIS EXPENSE, A TOPOGRAPHIC SURVEY BY A REGISTERED LAND SURVEYOR AND SUBMIT IT TO THE OWNER FOR HIS REVIEW.
18. ALL UNSURFACED AREAS DISTURBED BY GRADING OPERATION SHALL RECEIVE 6 INCHES OF TOPSOIL. CONTRACTOR SHALL APPLY STABILIZATION FABRIC TO ALL SLOPES 3H:1V OR STEEPER. CONTRACTOR SHALL GRASS DISTURBED AREAS IN ACCORDANCE WITH COUNTY SPECIFICATIONS UNTIL A HEALTHY STAND OF GRASS IS OBTAINED.
19. CONSTRUCTION SHALL COMPLY WITH ALL APPLICABLE GOVERNING CODES AND BE CONSTRUCTED TO SAME.
20. CONTRACTOR SHALL VERIFY HORIZONTAL AND VERTICAL LOCATION OF ALL EXISTING STORM SEWER STRUCTURES, PIPES, AND ALL UTILITIES PRIOR TO CONSTRUCTION.

50 0 25 50
SCALE IN FEET

Date	Description	No.
8/8/2016	REVISIONS PER TOWNSHIP AND COUNTY COMMENTS	1.

REVISIONS

BRIAN M. CONLON — DATE
PROFESSIONAL ENGINEER
PA Lic. No. PE061782

LANGAN
30 South 17th Street, Suite 1300, Philadelphia, PA 19103
T: 215.864.0640 F: 215.864.0671 www.langan.com
NEW JERSEY NEW YORK CONNECTICUT PENNSYLVANIA OHIO
VIRGINIA WASHINGTON DC FLORIDA NORTH DAKOTA CALIFORNIA
ABU DHABI ATHENS DOHA DUBAI ISTANBUL
Langan Engineering, Environmental, Surveying and Landscape Architecture, D.P.C.
Langan Engineering and Environmental Services, Inc.
Langan CT, Inc.
Langan International LLC
Collectively known as Langan

Project
THE MARKETPLACE AT NESHAMINY
BENSALEM TOWNSHIP
BUCKS COUNTY **PENNSYLVANIA**

Drawing Title
GRADING & DRAINAGE PLAN

Project No.	220048102
Date	24 JUNE 2016
Scale	1"=50'
Drawn By	TFH
Checked By	BMC
Drawing No.	CG-102
	SHEET 11 OF 29

© 2014 Langan

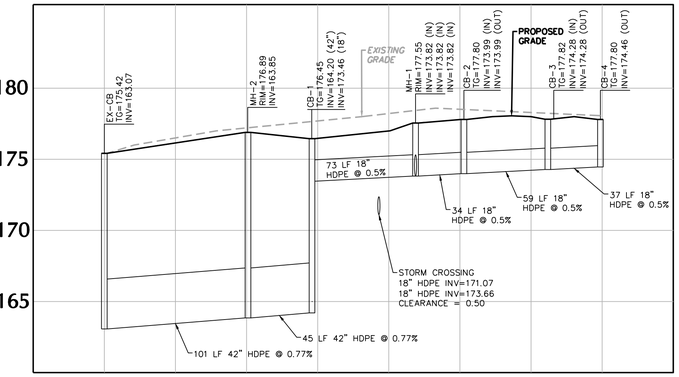

EX-CB TO CB-4

1"=50' HORIZONTAL 1"=5' VERTICAL

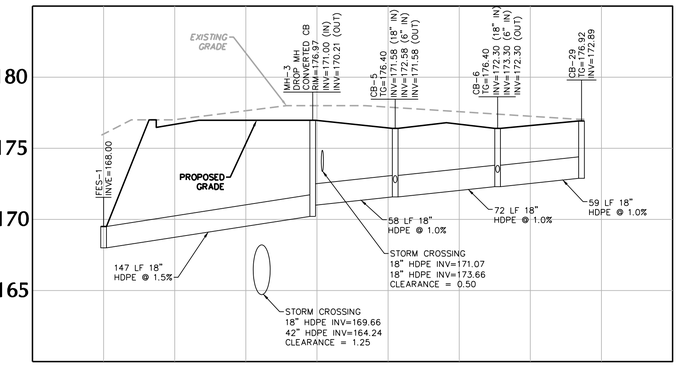

FES-1 TO CB-29

1"=50' HORIZONTAL 1"=5' VERTICAL

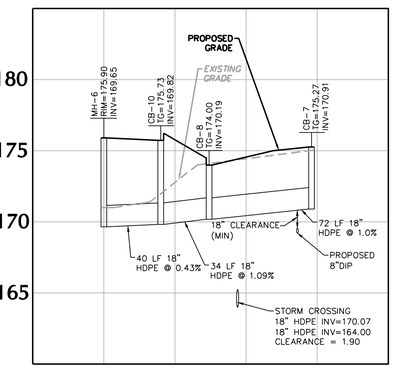

MH-6 TO CB-7

1"=50' HORIZONTAL 1"=5' VERTICAL

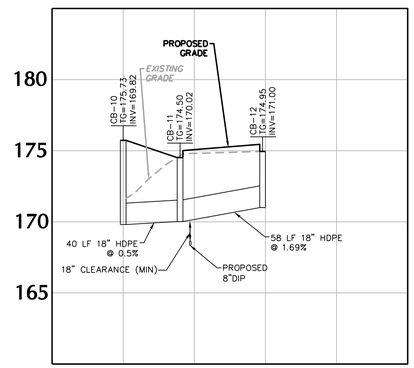

CB-10 TO CB-12

1"=50' HORIZONTAL 1"=5' VERTICAL

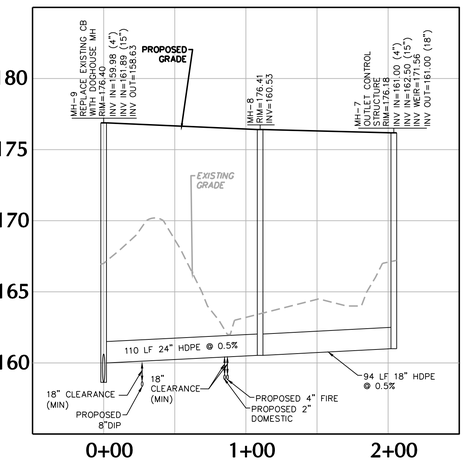

MH-9 TO MH-7

1"=50' HORIZONTAL 1"=5' VERTICAL

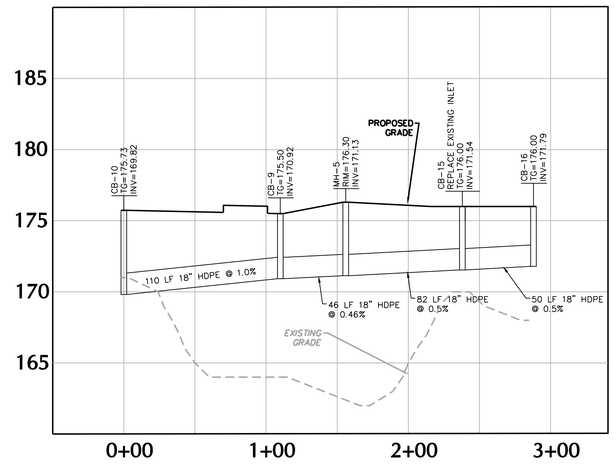

CB-16 TO CB-10

1"=50' HORIZONTAL 1"=5' VERTICAL

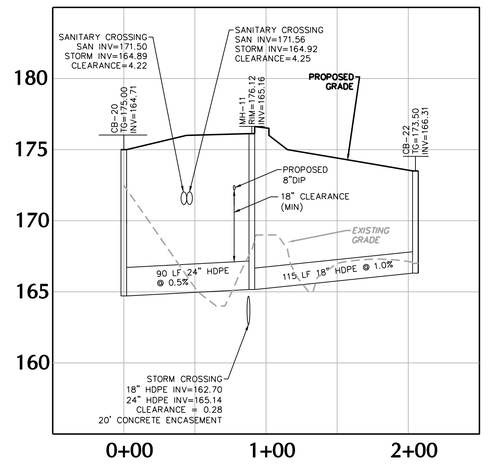

CB-20 TO CB-22

1"=50' HORIZONTAL 1"=5' VERTICAL

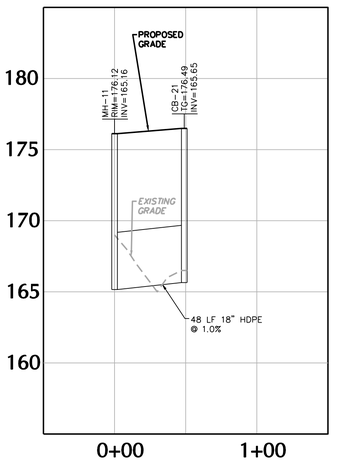

MH-11 TO CB-21

1"=50' HORIZONTAL 1"=5' VERTICAL

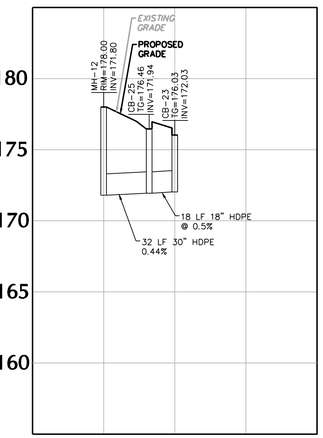

MH-12 TO CB-23

1"=50' HORIZONTAL 1"=5' VERTICAL

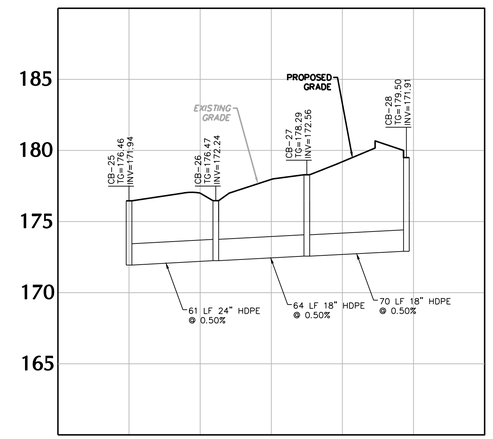

CB-25 TO CB-28

1"=50' HORIZONTAL 1"=5' VERTICAL

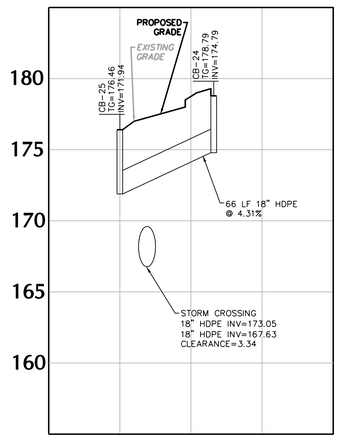

CB-25 TO CB-24

1"=50' HORIZONTAL 1"=5' VERTICAL

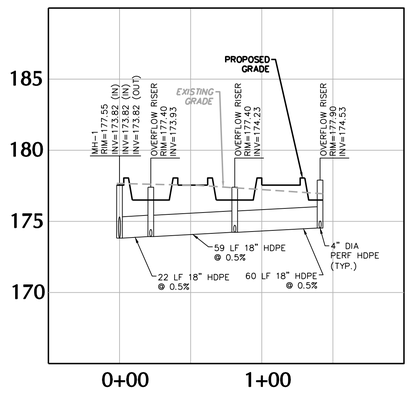

MH-1 TO OVERFLOW RISER

1"=50' HORIZONTAL 1"=5' VERTICAL

Date	Description	No.
8/8/2016	REVISIONS PER TOWNSHIP AND COUNTY COMMENTS	1.

REVISIONS

BRIAN M. CONLON DATE
PROFESSIONAL ENGINEER
PA Lic. No. PE061782

LANGAN
30 South 17th Street, Suite 1300, Philadelphia, PA 19103
T: 215.864.0640 F: 215.864.0671 www.langan.com
NEW JERSEY NEW YORK CONNECTICUT PENNSYLVANIA OHIO VIRGINIA WASHINGTON DC FLORIDA NORTH DAKOTA CALIFORNIA ABU DHABI ATHENS DOHA DUBAI ISTANBUL
Langan Engineering, Environmental, Surveying and Landscape Architecture, D.P.C.
Langan Engineering and Environmental Services, Inc.
Langan CT, Inc.
Langan International LLC
Collectively known as Langan

Project

THE MARKETPLACE AT NESHAMINY

BENSALEM TOWNSHIP
BUCKS COUNTY PENNSYLVANIA

Drawing Title

POST-CONSTRUCTION STORMWATER MANAGEMENT STORM SEWER PROFILES I

Project No. 220048102	Drawing No. CG-201
Date 24 JUNE 2016	
Scale AS SHOWN	
Drawn By TFH	
Checked By BMC	SHEET 12 OF 29

©2016 Langan

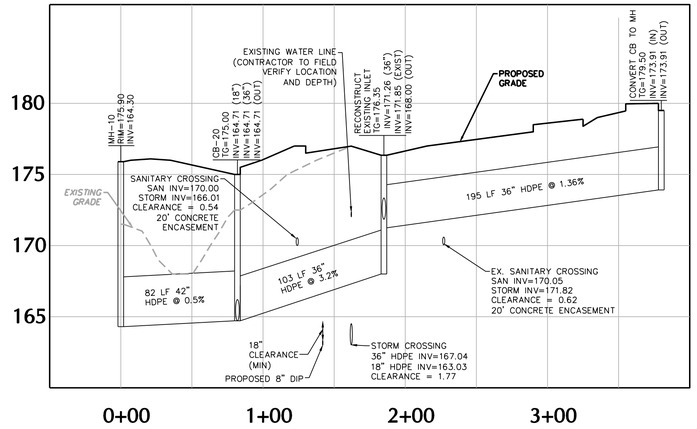

CONVERTED CB TO TO MH-10

1"=50' HORIZONTAL 1"=5' VERTICAL

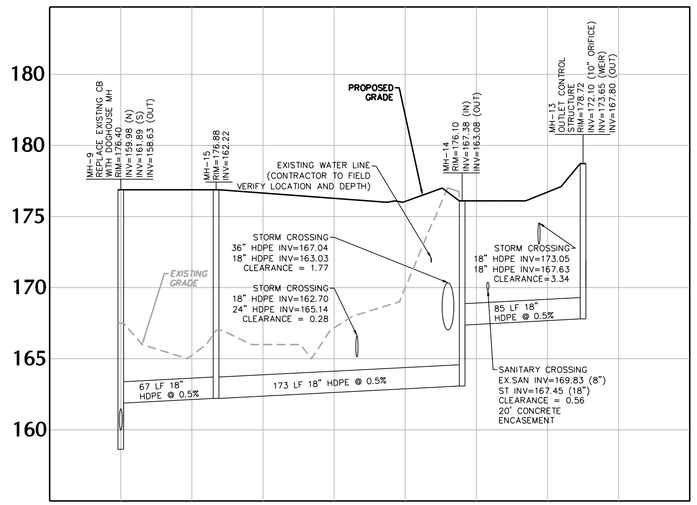

MH-9 TO MH-13

1"=50' HORIZONTAL 1"=5' VERTICAL

Date	Description	No.
8/8/2016	REVISIONS PER TOWNSHIP AND COUNTY COMMENTS	1.

REVISIONS

BRIAN M. CONLON DATE
PROFESSIONAL ENGINEER
PA Lic. No. PE061782

LANGAN
30 South 17th Street, Suite 1300, Philadelphia, PA 19103
T: 215.864.0640 F: 215.864.0671 www.langan.com
NEW JERSEY NEW YORK CONNECTICUT PENNSYLVANIA OHIO
VIRGINIA WASHINGTON DC FLORIDA NORTH DAKOTA CALIFORNIA
ABU DHABI ATHENS DOHA DUBAI ISTANBUL
Langan Engineering, Environmental, Surveying and Landscape Architecture, D.P.C.
Langan Engineering and Environmental Services, Inc.
Langan CT, Inc.
Langan International LLC
Collectively known as Langan

Project

THE MARKETPLACE AT NESHAMINY

BENSALEM TOWNSHIP
BUCKS COUNTY PENNSYLVANIA

Drawing Title

POST-CONSTRUCTION STOWMWATER MANAGEMENT STORM SEWER PROFILES II

Project No. 220048102	Drawing No. CG-202
Date 24 JUNE 2016	
Scale AS SHOWN	
Drawn By TFH	
Checked By BMC	SHEET 13 OF 29

©2014 Langan

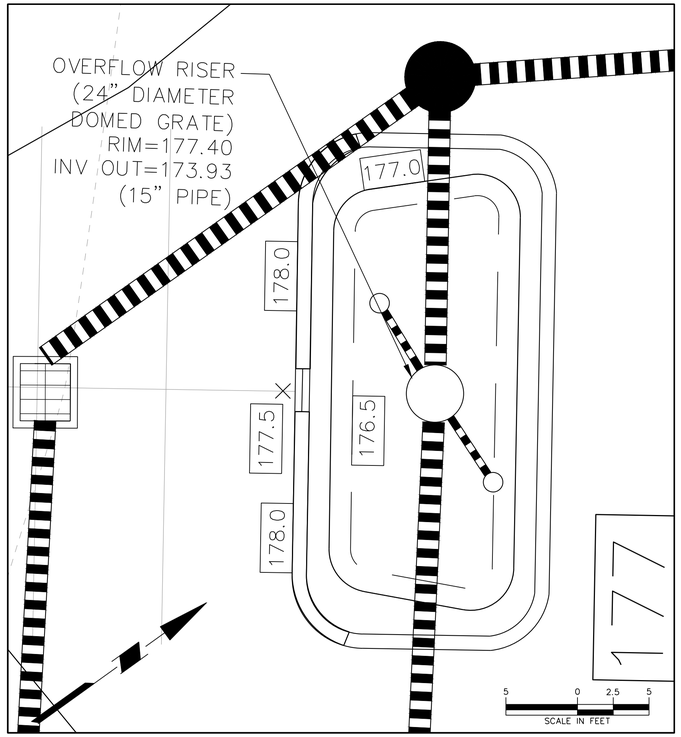

BIO-RETENTION #1

1"=5'

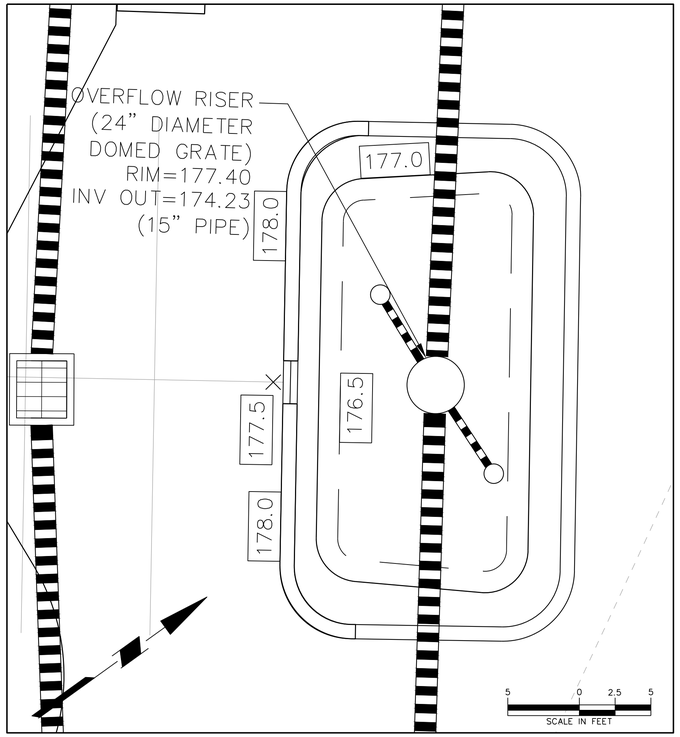

BIO-RETENTION #2

1"=5'

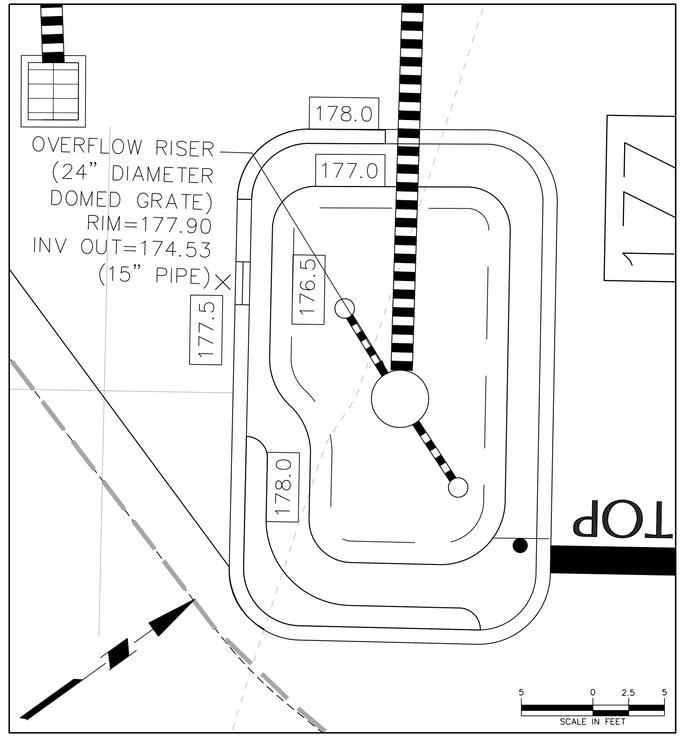

BIO-RETENTION #3

1"=5'

LEGEND

- EXISTING CONTOUR
- EXISTING STORM PIPE
- EXISTING STORM INLET
- EXISTING STORM MANHOLE
- EXISTING SANITARY SEWER
- EXISTING WATER
- EXISTING GAS
- EXISTING TELEPHONE/ELECTRIC
- PROPOSED SPOT ELEVATION
- PROPOSED CONTOUR
- PROPOSED STORM PIPE
- PROPOSED STORM INLET
- PROPOSED STORM MANHOLE
- PROPOSED SAWCUT LINE
- SUBSURFACE STORMWATER INFILTRATION FACILITY
- SUBSURFACE STORMWATER DETENTION FACILITY

PENNSYLVANIA ONE CALL SYSTEM, INC. 1-800-242-1776 STOP - CALL BEFORE YOU DIG

CALL BEFORE YOU DIG IN PA, TOLL FREE
1 - 800 - 242-1776
FOR FREE MARKOUTS TO LOCATE UNDERGROUND UTILITIES
" IT'S THE LAW "

Date	Description	No.

REVISIONS

BRIAN M. CONLON — DATE
PROFESSIONAL ENGINEER
PA Lic. No. PE061782

LANGAN
30 South 17th Street, Suite 1300, Philadelphia, PA 19103
T: 215.864.0640 F: 215.864.0671 www.langan.com
NEW JERSEY NEW YORK CONNECTICUT PENNSYLVANIA OHIO
VIRGINIA WASHINGTON DC FLORIDA NORTH DAKOTA CALIFORNIA
ABU DHABI ATHENS DOHA DUBAI ISTANBUL
Langan Engineering, Environmental, Surveying and Landscape Architecture, D.P.C.
Langan Engineering and Environmental Services, Inc.
Langan CT, Inc.
Langan International LLC
Collectively known as Langan

Project

THE MARKETPLACE AT NESHAMINY

BENSALEM TOWNSHIP
BUCKS COUNTY — **PENNSYLVANIA**

Drawing Title

POST-CONSTRUCTION STORMWATER MANAGEMENT BIO-RETENTION PLAN

Project No.	Drawing No.
220048102	CG-203
Date: 8 AUGUST 2016	
Scale: 1"=50'	
Drawn By: TFH	
Checked By: BMC	SHEET 14 OF 29

© 2014 Langan

Filename: \\langan.com\data\PH\data1\220048102\Cadd Data - 220048102\SheetFiles\2016.08.08 - NPDES Revised Submission\220048102-CG-203.dwg Date: 8/15/2016 Time: 09:20 User: ddonchez Style Table: Langan.stb Layout: CG-101

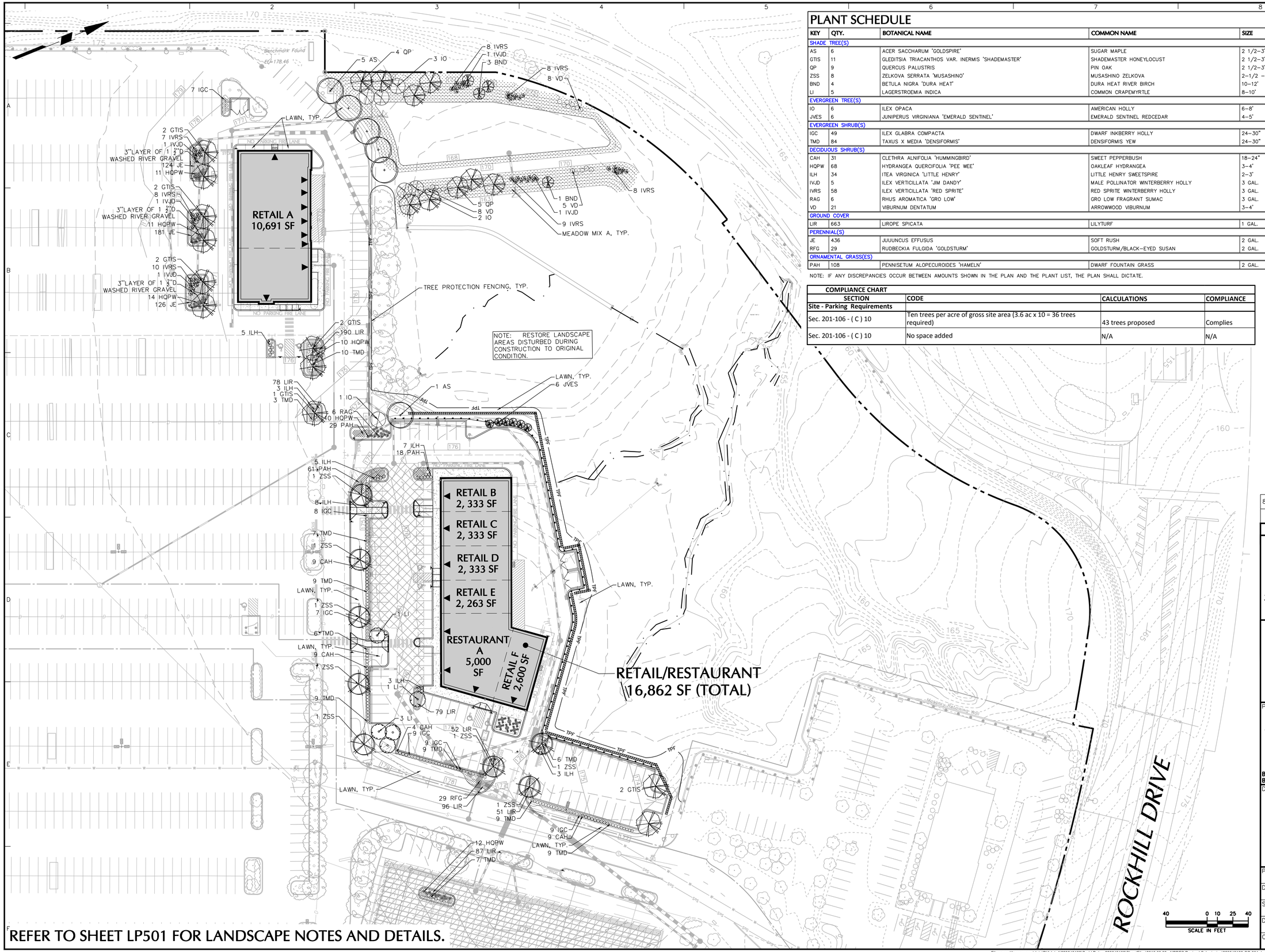

PLANT SCHEDULE

KEY	QTY.	BOTANICAL NAME	COMMON NAME	SIZE	ROOT	REMARKS
SHADE TREE(S)						
AS	6	ACER SACCHARUM 'GOLDSPIRE'	SUGAR MAPLE	2 1/2–3" CAL.	B+B	–
GTIS	11	GLEDITSIA TRIACANTHOS VAR. INERMIS 'SHADEMASTER'	SHADEMASTER HONEYLOCUST	2 1/2–3" CAL.	B+B	–
QP	9	QUERCUS PALUSTRIS	PIN OAK	2 1/2–3" CAL.	B+B	–
ZSS	8	ZELKOVA SERRATA 'MUSASHINO'	MUSASHINO ZELKOVA	2–1/2 – 3" CAL.	B+B	–
BND	4	BETULA NIGRA 'DURA HEAT'	DURA HEAT RIVER BIRCH	10–12'	B+B	–
LI	5	LAGERSTROEMIA INDICA	COMMON CRAPEMYRTLE	8–10'	B+B	HARDY SELECTION
EVERGREEN TREE(S)						
IO	6	ILEX OPACA	AMERICAN HOLLY	6–8'	B+B	–
JVES	6	JUNIPERUS VIRGINIANA 'EMERALD SENTINEL'	EMERALD SENTINEL REDCEDAR	4–5'	B+B	–
EVERGREEN SHRUB(S)						
IGC	49	ILEX GLABRA COMPACTA	DWARF INKBERRY HOLLY	24–30"	#5 CAN	–
TMD	84	TAXUS X MEDIA 'DENSIFORMIS'	DENSIFORMIS YEW	24–30"	B+B	–
DECIDUOUS SHRUB(S)						
CAH	31	CLETHRA ALNIFOLIA 'HUMMINGBIRD'	SWEET PEPPERBUSH	18–24"	CONTAINER	–
HQPW	68	HYDRANGEA QUERCIFOLIA 'PEE WEE'	OAKLEAF HYDRANGEA	3–4'	B+B	–
ILH	34	ITEA VIRGINICA 'LITTLE HENRY'	LITTLE HENRY SWEETSPIRE	2–3'	CONTAINER	–
IVJD	5	ILEX VERTICILLATA 'JIM DANDY'	MALE POLLINATOR WINTERBERRY HOLLY	3 GAL.	CONTAINER	–
IVRS	58	ILEX VERTICILLATA 'RED SPRITE'	RED SPRITE WINTERBERRY HOLLY	3 GAL.	CONTAINER	–
RAG	6	RHUS AROMATICA 'GRO LOW'	GRO LOW FRAGRANT SUMAC	3 GAL.	CONTAINER	–
VD	21	VIBURNUM DENTATUM	ARROWWOOD VIBURNUM	3–4'	B+B	–
GROUND COVER						
LIR	663	LIROPE SPICATA	LILYTURF	1 GAL.	CONTAINER	spaced @ 12" o.c.
PERENNIAL(S)						
JE	436	JUJUNCUS EFFUSUS	SOFT RUSH	2 GAL.	CONTAINER	spaced @ 12" o.c.
RFG	29	RUDBECKIA FULGIDA 'GOLDSTURM'	GOLDSTURM/BLACK–EYED SUSAN	2 GAL.	CONTAINER	spaced @ 24" o.c.
ORNAMENTAL GRASS(ES)						
PAH	108	PENNISETUM ALOPECUROIDES 'HAMELN'	DWARF FOUNTAIN GRASS	2 GAL.	CONTAINER	spaced @ 24" o.c.

NOTE: IF ANY DISCREPANCIES OCCUR BETWEEN AMOUNTS SHOWN IN THE PLAN AND THE PLANT LIST, THE PLAN SHALL DICTATE.

COMPLIANCE CHART

SECTION	CODE	CALCULATIONS	COMPLIANCE
Site - Parking Requirements			
Sec. 201-106 - (C) 10	Ten trees per acre of gross site area (3.6 ac x 10 = 36 trees required)	43 trees proposed	Complies
Sec. 201-106 - (C) 10	No space added	N/A	N/A

Date	Description	No.
8/8/2016	REVISIONS PER TOWNSHIP AND COUNTY COMMENTS	1.

REVISIONS

JAYNE O. SPECTOR — DATE
LANDSCAPE ARCHITECT
P.A. Lic. No. LA001000R

LANGAN
30 South 17th Street, Suite 1300, Philadelphia, PA 19103
T: 215.864.0640 F: 215.864.0671 www.langan.com
NEW JERSEY NEW YORK CONNECTICUT PENNSYLVANIA OHIO
VIRGINIA WASHINGTON DC FLORIDA NORTH DAKOTA CALIFORNIA
ABU DHABI ATHENS DOHA DUBAI ISTANBUL
Langan Engineering, Environmental, Surveying and Landscape Architecture, D.P.C.
Langan Engineering and Environmental Services, Inc.
Langan CT, Inc.
Langan International LLC
Collectively known as Langan

Project

THE MARKETPLACE AT NESHAMINY

BENSALEM TOWNSHIP
BUCKS COUNTY — PENNSYLVANIA

Drawing Title

POST-CONSTRUCTION STORMWATER MANAGEMENT LANDSCAPE RESTORATION PLAN

Project No. 220048102	Drawing No. CG-301
Date 24 JUNE 2016	
Scale 1"=40'	
Drawn By JP	
Checked By JOS	SHEET 15 OF 29

40 0 10 25 40
SCALE IN FEET

©2016 Langan

GENERAL LANDSCAPE PLANTING NOTES:

PLANTING MATERIALS

1. NAMES OF PLANTS AS DESCRIBED ON THIS PLAN CONFORM TO THOSE GIVEN IN "STANDARDIZED PLANT NAMES", 1942 EDITION PREPARED BY THE AMERICAN JOINT COMMITTEE ON HORTICULTURAL NOMENCLATURE. NAMES OF PLANT VARIETIES NOT INCLUDED THEREIN CONFORM TO NAMES GENERALLY ACCEPTED IN NURSERY TRADE.

2. STANDARDS FOR TYPE, SPREAD, HEIGHT, ROOT BALL AND QUALITY OF NEW PLANT MATERIAL SHALL BE IN ACCORDANCE WITH GUIDELINES AS SET FORTH IN THE "AMERICAN STANDARD FOR NURSERY STOCK", PUBLISHED BY THE AMERICAN ASSOCIATION OF NURSERYMEN. PLANT MATERIAL SHALL HAVE NORMAL HABIT OF GROWTH AND BE HEALTHY, VIGOROUS, AND FREE FROM DISEASES AND INSECT INFESTATION.

3. NEW PLANT MATERIAL SHALL BE NURSERY GROWN UNLESS SPECIFIED OTHERWISE. ALL PLANTS SHALL BE SET PLUMB AND SHALL BEAR THE SAME RELATIONSHIP TO FINISHED GRADE AS THE PLANT'S ORIGINAL GRADE BEFORE DIGGING. PLANT MATERIAL OF THE SAME SPECIES AND SPECIFIED AS THE SAME SIZE SHOULD BE SIMILAR IN SHAPE, COLOR AND HABIT. THE LANDSCAPE ARCHITECT HAS THE RIGHT TO REJECT PLANT MATERIAL THAT DOES NOT CONFORM TO THE TYPICAL OR SPECIFIED HABIT OF THAT SPECIES.

4. THE CONTRACTOR SHALL NOT MAKE SUBSTITUTIONS. IF THE SPECIFIED LANDSCAPE MATERIAL IS NOT OBTAINABLE, THE CONTRACTOR SHALL SUBMIT PROOF OF NON-AVAILABILITY TO THE LANDSCAPE ARCHITECT AND OWNER TOGETHER WITH A WRITTEN PROPOSAL FOR USE OF AN EQUIVALENT MATERIAL.

5. THE LANDSCAPE ARCHITECT MAY REVIEW PLANT MATERIALS AT THE SITE, BEFORE PLANTING, FOR COMPLIANCE WITH REQUIREMENTS FOR GENUS, SPECIES, VARIETY, SIZE, AND QUALITY. THE LANDSCAPE ARCHITECT RETAINS THE RIGHT TO FURTHER REVIEW PLANT MATERIALS FOR SIZE AND CONDITION OF BALLS AND ROOT SYSTEM, INSECTS, INJURIES, AND LATENT DEFECTS, AND TO REJECT UNSATISFACTORY OR DEFECTIVE MATERIAL AT ANY TIME DURING PROGRESS OF WORK. THE CONTRACTOR SHALL REMOVE REJECTED PLANT MATERIALS IMMEDIATELY FROM PROJECT SITE AS DIRECTED BY THE LANDSCAPE ARCHITECT OR OWNER.

PLANTING SOILS

1. REUSE SURFACE SOILS STOCKPILED ON SITE, VERIFYING COMPLIANCE WITH PLANTING SOIL AND TOPSOIL CRITERIA IN THIS SPECIFICATION THROUGH TESTING. CLEAN SURFACE SOIL OF ALL ROOTS, PLANTS, SOD, AND GRAVEL OVER 1" IN DIAMETER AND DELETERIOUS MATERIALS. IF ON-SITE SOILS ARE TO BE USED FOR PROPOSED PLANTING, THE CONTRACTOR SHALL DEMONSTRATE, THROUGH SOIL TESTING, THAT ON-SITE SOILS MEET THE SAME CRITERIA AS INDICATED IN NOTES PLANS AND SPECIFICATIONS

2. SUPPLEMENT WITH IMPORTED OR MANUFACTURED TOPSOIL FROM OFF SITE SOURCES WHEN TOPSOIL AND PLANTING SOIL QUANTITIES ARE INSUFFICIENT. OBTAIN SOIL DISPLACED FROM NATURALLY WELL-DRAINED SITES WHERE TOPSOIL OCCURS AT LEAST 4" DEEP. DO NOT OBTAIN FROM AGRICULTURAL LAND, BOGS, MARSHES OR CONTAMINATED SITES.

3. IF DEPTH OF PLANTING SOILS AND TOPSOIL IS NOT INDICATED IN PLANS OR DETAILS, A MINIMUM 18" DEPTH SHALL BE PROVIDED FOR ALL TREES AND LARGE SHRUBS; MINIMUM 12" DEPTH SHALL BE PROVIDED FOR GROUNDCOVERS, HERBACEOUS AND MEADOW OR ORNAMENTAL GRASS AREAS AND A MINIMUM 6" LAYER SHALL BE INSTALLED IN ALL LAWN AREAS. TOPSOIL AND PLANTING SOIL DEPTH INDICATED ON PLANS AND PLANTING DETAILS AND NARRATIVE SPECIFICATIONS SHALL GOVERN DEPTH WHEN PROVIDED.

4. WHERE PLANTING AREAS ARE PROPOSED FOR FORMER PAVED OR GRAVEL AREAS, BEDS SHALL BE EXCAVATED TO A MINIMUM 30" DEPTH AND, AT A MINIMUM, BE BACKFILLED WITH BOTTOM LAYER OF SANDY LOAM (ORGANIC CONTENT LESS THAN 2%) OVER WHICH TOPSOIL AND PLANTING SOILS WILL BE PLACED AT DEPTHS INDICATED IN PLANS, DETAILS AND NOTES.

5. IF THE QUANTITY OF SOILS FROM THE SITE IS NOT ADEQUATE TO FILL PLANTING AREAS TO A DEPTH INDICATED IN PLANS AND DETAILS, TOPSOIL AND PLANTING SOILS TO DETERMINE IF THE MATERIALS ARE CONDUCIVE TO SUSTAINING PROPOSED PLANTINGS SHOULD BE FURNISHED BY THE CONTRACTOR. TOPSOIL AND PLANTING SOILS SHALL BE FREE OF BROKEN GLASS, PAINT CHIPS, PLASTIC, DELETERIOUS MATERIALS, ROOTS, WEEDS, BOULDERS, COBBLES AND GRAVEL OVER 1" IN DIAMETER AND COMPLY WITH THE FOLLOWING CRITERIA:
   - SOILS SHALL MEET ALL APPLICABLE SOIL REMEDIATION STANDARDS
   - ORGANIC CONTENT: 2-5% IN NATIVE SOILS; UP TO 10% IN AMENDED SOILS
   - SOLUBLE SALTS: LESS THAN 0.5 MM HOS/CM
   - SOIL PH: 4.5-7.5 TO BE AMENDED PER SOIL TEST RESULTS
   - PHYSICAL (SIEVE) ANALYSIS/ SOIL TEXTURE
   SAND: 40-60% SILT: 25-60% CLAY: 5-20%
   - NOT MORE THAN 1% OF MATERIAL SHALL BE RETAINED BY A #4 SIEVE.

6. ALL PLANTING SOILS SHALL BE SUBMITTED FOR TESTING TO THE STATE COOPERATIVE EXTENSION SERVICE, OR APPROVED EQUAL PRIOR TO DELIVERY TO THE SITE. CONTRACTOR SHALL FURNISH SOIL SAMPLES AND SOIL TEST RESULTS TO LANDSCAPE ARCHITECT OR OWNER AT A RATE OF ONE SAMPLE PER 500 CUBIC YARDS TO ENSURE CONSISTENCY ACROSS THE TOTAL VOLUME OF PLANTING SOIL REQUIRED. TEST RESULTS SHALL EVALUATE FOR ALL CRITERIA LISTED IN THIS SPECIFICATION. IF TESTING AGENCY DETERMINES THAT THE SOILS ARE DEFICIENT IN ANY MANNER AND MAY BE CORRECTED BY ADDING AMENDMENTS, THE CONTRACTOR SHALL FOLLOW STATED RECOMMENDATIONS FOR SOIL IMPROVEMENT AND FURNISH SUBMITTALS FOR ALL AMENDMENTS PRIOR TO DELIVERY OF SOIL TO THE PROJECT SITE.

7. IF SOIL ORGANIC CONTENT IS INADEQUATE, SOIL SHALL BE AMENDED WITH COMPOST OR ACCEPTABLE, WEED FREE, ORGANIC MATTER. ORGANIC AMENDMENT SHALL BE WELL COMPOSTED, PH RANGE OF 6-8; MOISTURE CONTENT 35-55% BY WEIGHT 100% PASSING THROUGH 1" SIEVE; SOLUBLE SALT CONTENT LESS THAN 0.5 MM HOS/CM; MEETING ALL APPLICABLE ENVIRONMENTAL CRITERIA FOR CLEAN FILL; FREE OF BROKEN GLASS, PAINT CHIPS, PLASTIC, DELETERIOUS MATERIALS, ROOTS, WEEDS, BOULDERS, COBBLES AND GRAVEL OVER 1" IN DIAMETER

8. SCARIFY AND/OR TILL ALL COMPACTED SUBSOILS PRIOR TO ADDING PLANTING SOIL OR TOPSOIL. PLANTING SOILS AND TOPSOIL SHALL BE PLACED IN 12-18" LIFTS AND WATER THOROUGHLY BEFORE INSTALLING NEXT LIFT. NO SOILS SHALL BE PLACED IN A FROZEN OR MUDDY CONDITION.

DELIVERY, STORAGE, AND HANDLING

1. PACKAGED MATERIALS: PACKAGED MATERIALS SHALL BE DELIVERED IN CONTAINERS SHOWING WEIGHT, ANALYSIS, AND NAME OF MANUFACTURER. MATERIALS SHALL BE PROTECTED FROM DETERIORATION DURING DELIVERY, AND WHILE STORED AT SITE.

2. TREES AND SHRUBS: THE CONTRACTOR SHALL PROVIDE TREES AND SHRUBS DUG FOR THE GROWING SEASON FOR WHICH THEY WILL BE PLANTED. DO NOT PRUNE PRIOR TO DELIVERY UNLESS OTHERWISE DIRECTED BY THE LANDSCAPE ARCHITECT. DO NOT BEND OR BIND-TIE TREES OR SHRUBS IN SUCH A MANNER AS TO DAMAGE BARK, BREAK BRANCHES, OR DESTROY NATURAL SHAPE. PROVIDE PROTECTIVE COVERING DURING TRANSIT. DO NOT DROP OR BREAK BALLED STOCK DURING DELIVERY OR HANDLING.

3. ALL PLANTS SHALL BE BALLED AND BURLAPPED OR CONTAINER GROWN AS SPECIFIED. NO CONTAINER GROWN STOCK WILL BE ACCEPTED IF IT IS ROOT BOUND. ALL ROOT BALL WRAPPING AND BINDING MATERIAL MADE OF SYNTHETICS OR PLASTICS SHALL BE REMOVED FROM THE TOP OF THE BALL AT THE TIME OF PLANTING, IF THE PLANT IS SHIPPED WITH A WIRE BASKET AROUND THE ROOT BALL, THE WIRE BASKET SHALL BE CUT AND FOLDED DOWN 8" INTO THE PLANTING HOLE. WITH CONTAINER-GROWN STOCK, THE CONTAINER SHALL BE REMOVED AND THE ROOT BALL SHALL BE CUT THROUGH THE SURFACE IN TWO LOCATIONS.

4. THE CONTRACTOR SHALL HAVE TREES AND SHRUBS DELIVERED TO SITE AFTER PREPARATIONS FOR PLANTING HAVE BEEN COMPLETED AND PLANT IMMEDIATELY. IF PLANTING IS DELAYED MORE THAN 6 HOURS AFTER DELIVERY, THE CONTRACTOR SHALL SET TREES AND SHRUBS IN SHADE, PROTECT FROM WEATHER AND MECHANICAL DAMAGE AND KEEP ROOTS MOIST BY COVERING WITH MULCH, BURLAP OR OTHER ACCEPTABLE MEANS OF RETAINING MOISTURE.

INSTALLATION

1. THE CONTRACTOR SHALL VERIFY THE LOCATION OF ALL EXISTING UNDERGROUND UTILITY AND SEWER LINES PRIOR TO THE START OF EXCAVATION ACTIVITIES. NOTIFY THE PROJECT ENGINEER AND OWNER IMMEDIATELY OF ANY CONFLICTS WITH PROPOSED PLANTING LOCATIONS. THE CONTRACTOR SHALL BE RESPONSIBLE FOR ANY DAMAGE.

2. THE CONTRACTOR TO STAKE OUT PLANTING LOCATIONS, FOR REVIEW AND APPROVAL BY THE LANDSCAPE ARCHITECT AND/OR OWNER BEFORE PLANTING WORK BEGINS. THE LANDSCAPE ARCHITECT AND/OR OWNER SHALL DIRECT THE CONTRACTOR IN THE FINAL PLACEMENT OF ALL PLANT MATERIAL AND LOCATION OF PLANTING BEDS TO ENSURE COMPLIANCE WITH DESIGN INTENT UNLESS OTHERWISE INSTRUCTED.

3. NO PLANT SHALL BE PUT INTO THE GROUND BEFORE ROUGH GRADING HAS BEEN COMPLETED AND APPROVED BY THE PROJECT LANDSCAPE ARCHITECT OR PROJECT ENGINEER.

4. ALL LANDSCAPED AREAS TO BE CLEARED OF ROCKS, STUMPS, TRASH AND OTHER UNSIGHTLY DEBRIS. ALL FINE GRADED AREAS SHOULD BE HAND RAKED SMOOTH ELIMINATING ANY CLUMPS AND UNEVEN SURFACES PRIOR TO PLANTING OR MULCHING.

5. ALL PLANT MATERIAL SHALL BE INSTALLED AS PER DETAILS, NOTES AND CONTRACT SPECIFICATIONS. THE LANDSCAPE ARCHITECT MAY REVIEW INSTALLATION AND MAINTENANCE PROCEDURES.

6. THE CONTRACTOR SHALL KEEP AREA CLEAN DURING DELIVERY AND INSTALLATION OF PLANT MATERIALS. REMOVE AND DISPOSE OF OFF-SITE ANY ACCUMULATED DEBRIS OR UNUSED MATERIALS. REPAIR DAMAGE TO ADJACENT AREAS CAUSED BY LANDSCAPE INSTALLATION OPERATIONS.

7. AFTER PLANT IS PLACED IN TREE PIT LOCATION, ALL TWINE HOLDING ROOT BALL TOGETHER SHOULD BE COMPLETELY REMOVED AND THE BURLAP SHOULD BE PULLED DOWN SO 1/3 OF THE ROOT BALL IS EXPOSED. SYNTHETIC BURLAP SHOULD BE COMPLETELY REMOVED AFTER INSTALLATION.

8. MULCH SHOULD NOT BE PILED UP AROUND THE TRUNK OF ANY PLANT MATERIAL. NO MULCH OR TOPSOIL SHOULD BE TOUCHING THE BASE OF THE TRUNK ABOVE THE ROOT COLLAR.

9. ALL PLANTS SHALL BE WATERED THOROUGHLY TWICE DURING THE FIRST 24-HOUR PERIOD AFTER PLANTING. ALL PLANTS SHALL THEN BE WATERED WEEKLY OR AS REQUIRED BY SITE AND WEATHER CONDITIONS TO MAINTAIN VIGOROUS AND HEALTHY PLANT GROWTH.

10. AFTER COMPLETION OF A PROJECT, ALL EXPOSED GROUND SURFACES THAT ARE NOT PAVED WITHIN THE CONTRACT LIMIT LINE, AND THAT ARE NOT COVERED BY LANDSCAPE PLANTING OR SEEDING AS SPECIFIED, SHALL BE COVERED BY A SHREDDED HARDWOOD BARK OR APPROVED EQUAL MULCH THAT WILL PREVENT SOIL EROSION AND THE EMANATION OF DUST.

11. TREES MAY BE STAKED AT LANDSCAPE CONTRACTOR'S DISCRETION. CURRENT HORTICULTURAL PRACTICE DOES NOT RECOMMEND STAKING TREES EXCEPT IN CONDITIONS WHERE TREES ARE SUBJECT TO BLOW DOWNS DUE TO SOIL CONDITIONS, HEAVY PREVAILING WINDS OR A HIGH RATIO OF TOP GROWTH TO ROOT BALL. IF STAKING IS DEEMED NECESSARY BY CONTRACTOR, STAKE AND GUYS SHOULD BE LOCATED AND FLAGGED IN A MANNER TO PREVENT TRIPPING HAZARDS. WIRES OR GUYS SHALL BE LOCATED AND COVERED SO AS NOT TO PULL OR DAMAGE BRANCHES AND SHALL BE REMOVED AT THE END OF THE GUARANTEE PERIOD.

GUARANTEE

1. NEW PLANT MATERIAL SHALL BE GUARANTEED TO BE ALIVE AND IN VIGOROUS GROWING CONDITION FOR A PERIOD OF ONE YEAR FOLLOWING ACCEPTANCE BY THE OWNER. PLANT MATERIAL FOUND TO BE UNHEALTHY, DYING OR DEAD DURING THIS PERIOD, SHALL BE REMOVED AND REPLACED IN KIND BY THE CONTRACTOR AT NO EXPENSE TO THE OWNER.

LAWN SEED MIX:

1. PRIOR TO SEEDING, AREA IS TO BE TOPSOILED, FINE GRADED, AND RAKED OF ALL DEBRIS LARGER THAN 2" DIAMETER.

2. THE FOLLOWING SEED MIX SHALL BE SOWN AT THE RATES AS DEPICTED:

RED FESCUE	1 1/2 LBS./1,000 SF
PERENNIAL RYEGRASS	1 LBS./1,000 SF
KENTUCKY BLUEGRASS	1 1/2 LBS./1,000 SF
SPREADING FESCUE	1 LBS./1,000 SF

3. SEEDED LAWN AREAS SHALL BE MULCHED TO PRESERVE SOIL MOISTURE AND PREVENT EROSION DURING THE ESTABLISHMENT PERIOD UNTIL A STAND OF COVER IS ACCEPTED BY THE OWNER. STANDARD MULCH MAY INCLUDE HYDROMULCH, SALT HAY OR SMALL GRAIN STRAW ANCHORED WITH TACKIFIER AS NECESSARY. AREAS PRONE TO EROSION SHALL BE PROTECTED AS NECESSARY WITH BIODEGRADABLE EROSION CONTROL MATERIALS IN ADDITION TO THE STANDARD MULCH. ALL MULCH MATERIALS AND HYDROSEED/MULCH MIX MUST BE REMOVED FROM ANY ADJACENT STRUCTURES, PAVING OR VEHICLES IMMEDIATELY.

4. SEEDING DATES FOR THIS MIXTURE SHALL BE AS FOLLOWS:
   SPRING: APRIL 1 – MAY 31
   FALL: AUGUST 16 – OCTOBER 31

5. GERMINATION RATES WILL VARY AS TO TIME OF YEAR FOR SOWING. CONTRACTOR TO IRRIGATE SEEDED AREA UNTIL AN ACCEPTABLE STAND OF COVER IS ESTABLISHED BY OWNER.

SOD SPECIFICATIONS:

1. SOD IS TO BE A FESCUE/BLUEGRASS BLEND APPROXIMATELY 70/30% SOD IS TO BE INDIGENOUS TO THE AREA AND BE FURNISHED BY A REPUTABLE GROWER WITH A MINIMUM 5 YEARS EXPERIENCE.

2. PRIOR TO SODDING ALL AREAS ARE TO BE TOPSOILED, FINE GRADED, RAKED, WATERED LIGHTLY, AND FERTILIZED WITH A STARTER FERTILIZER.

3. ALL STONES GREATER THAN 2" DIAMETER SHALL BE REMOVED.

4. SOD TO BE INSTALLED PERPENDICULAR TO ALL SLOPED AREAS. SOD STRIPS TO BE LAID OUT SO JOINTS ARE NOT CLOSER THAN ONE FOOT (1'-0") FROM EACH OTHER.

5. SOD IS TO BE WATERED AT A RATE OF AT LEAST ONE AND A HALF INCHES (1½") PER WEEK UNTIL ROOT MASS MENDS WITH SOIL. AFTER THIS HAS OCCURRED NORMAL WATERING OF AT LEAST ONE INCH (1") PER WEEK IS TO COMMENCE.

6. ALL SOD AREAS ARE TO BE ROLLED IF ANY HEAVING OR DEPRESSIONS OCCUR.

MEADOW SEEDING NOTES:

1. MEADOW MIX A – ERNST SEED MIX ERNMX-181 "NATIVE STEEP SLOPE SLOPE MIX W/ ANNUAL RYE"

20%	LOLIUM MULTIFLORUM	ANNUAL RYEGRASS
20%	ANDROPOGON SCOPARIUS	LITTLE BLUESTEM, CAMPER
20%	ELYMUS CANADENSIS	CANADA WLD RYE
10%	SPOROBOLUS ASPER	ROUGH DROPSEED
10%	BROMUS CILIATUS	FRINGED BROME
10%	AGROSTIS PERENNANS	AUTUMN BENTGRASS
5%	RUDBECKIA HIRTA	BLACK EYED SUSAN
3%	ASTER PRENANTHOIDES/NOVI-BELGII	ZIGZAG ASTER/NEW YORK ASTER MIX
2%	SOLIDAGO NEMORALIS	GRAY GOLDENROD

NOTES:

1. SEED AT A RATE OF 30 LBS./ACRE.
2. APPLY A NURSE CROP OF ANNUAL RYE AT A RATE OF 10 LBS./ACRE.

2. GENERAL SEEDING NOTES:

   1. SEEDING SHALL TAKE PLACE IN THE SPRING (APRIL 1 TO JUNE 1) OR THE FALL (SEPTEMBER 1 TO OCTOBER 1).
   2. ELIMINATE UNWANTED VEGETATION PRIOR TO SEEDING USING A BROAD-SPECTRUM NON-SELECTIVE HERBICIDE PER MANUFACTURER'S SPECIFICATIONS.
   3. IT IS RECOMMENDED THAT CONTRACTOR INSTALL SEED MIXTURE USING A NO-TILL TRUAX-TYPE DRILL WHERE APPLICABLE.
   4. CONTINUOUS MOISTURE FOR 4-6 WEEKS MUST BE INSURED TO ALLOW PROPER GERMINATION.

3. WEED CONTROL/MAINTENANCE NOTES:

   1. DURING THE ESTABLISHMENT YEAR, CONTRACTOR SHALL MOW SEEDING IF WEED HEIGHT EXCEEDS MEADOW MIX HEIGHT. MOW AT A HEIGHT OF 8"-10". DO NO MOW CLOSE, AS SOME OF THE MEADOW MIX MAY BE DAMAGED.
   2. AFTER THE FIRST GROWING SEASON, AND IF MEADOW MIX IS WELL ESTABLISHED, THE MEADOW MIX SHALL BE MOWED ONLY ONCE ANNUALLY. ANNUAL MAINTENANCE MOWING SHALL BE DONE IN LATE WINTER DURING THE MONTH OF MARCH.
   3. MOW IN WETLAND AND WETLAND TRANSITION AREAS DURING DRIER SITE CONDITIONS WHEN SOIL DISTURBANCE WILL NOT OCCUR. MAINTENANCE FOR WETLAND AND WETLAND TRANSITION AREAS SHALL OCCUR DURING LATE SUMMER (JULY 1 TO AUGUST 15) WHEN THE WATER TABLE IS USUALLY AT ITS LOWEST POINT OF THE YEAR. DO NOT MOW IN WETLAND OR WETLAND TRANSITION AREAS ESTABLISHMENT OF MEADOW MIX.

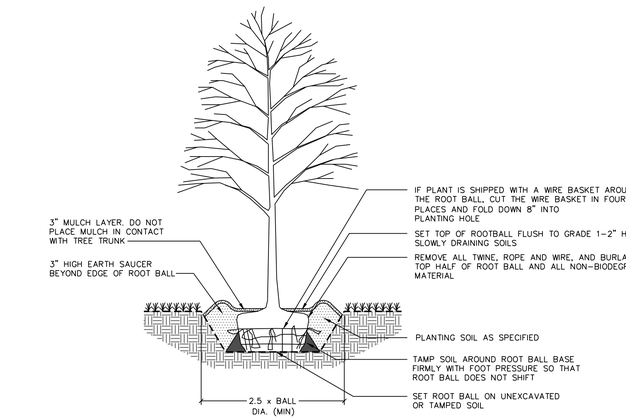

2 DECIDUOUS TREE PLANTING
NTS

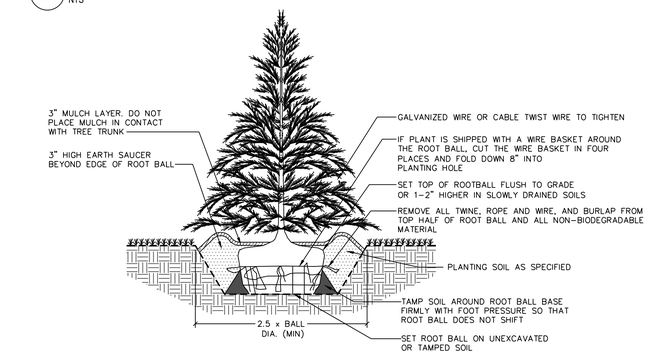

3 EVERGREEN TREE PLANTING
NTS

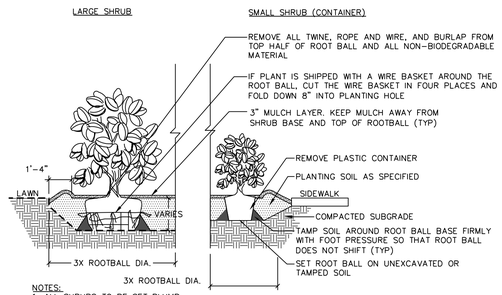

NOTES:
1. ALL SHRUBS TO BE SET PLUMB.
2. REFER TO LANDSCAPE PLAN FOR SPACING OF INDIVIDUAL PLANTS.
3. REMOVE ALL WIRE, PLASTIC, TAGS OR SYNTHETIC MATERIAL FROM PLANTS PRIOR TO PLANTING.

4 SHRUB PLANTING
NTS

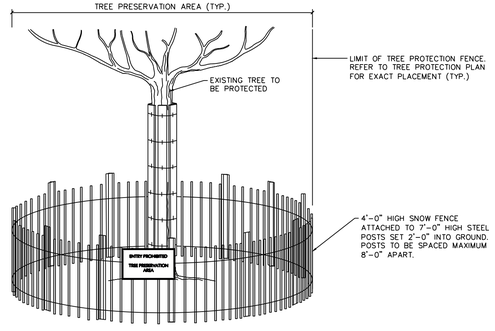

1 TREE PROECTION FENCING
NTS

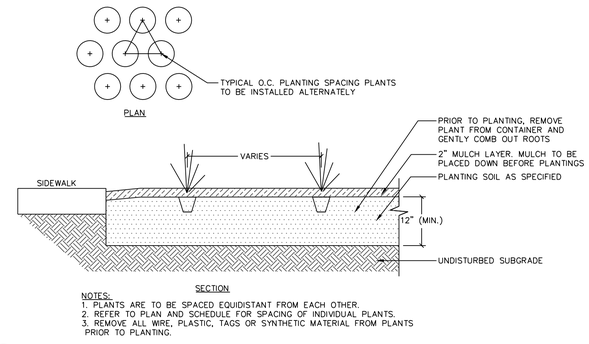

NOTES:
1. PLANTS ARE TO BE SPACED EQUIDISTANT FROM EACH OTHER.
2. REFER TO PLAN AND SCHEDULE FOR SPACING OF INDIVIDUAL PLANTS.
3. REMOVE ALL WIRE, PLASTIC, TAGS OR SYNTHETIC MATERIAL FROM PLANTS PRIOR TO PLANTING.

5 GROUNDCOVER / PERENNIAL PLANTING
NTS

GENERAL NOTE:

DUE TO GENERAL CONSTRUCTION ACTIVITIES AND ADJACENT SITE COMPACTION REQUIREMENTS, SUBGRADE SOILS WITHIN PROPOSED PLANTING AREAS TEND TO BECOME HIGHLY COMPACTED. IN ORDER TO CREATE A HEALTHY GROWTH MEDIUM TO ALLOW PROPOSED PLANTINGS TO ESTABLISH A VIGOROUS ROOT MASS, THIS SUBGRADE SOIL MUST UNDERGO A RESTORATION PROCESS. IN ADDITION, IMPORTED OR AMMENDED EXISTING SOILS SHALL BE MIXED WITH SUBGRADE SOILS WHERE THEY MEET IN ORDER TO CREATE A TRANSITIONAL GRADIENT TO ALLOW FOR PROPER DRAINAGE.

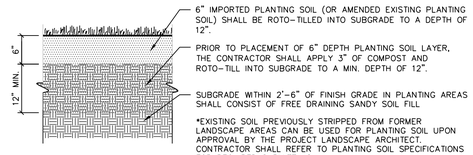

IMPORTED OR AMENDED EXISTING PLANTING SOIL WITHIN AREAS OF RAISED GRADE

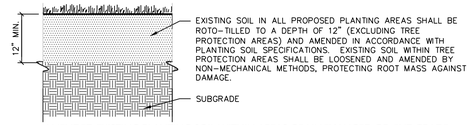

AMENDED EXISTING PLANTING SOIL WITHIN AREAS OF UNCHANGED OR CUT GRADE

NOTES:

1. CONTRACTOR IS RESPONSIBLE TO SEND SAMPLES OF EXISTING SOILS INTENDED FOR USE IN PLANTING AREAS (1 PER 500 CY.) TO TESTING LABORATORY OR UNIVERSITY COOPERATIVE EXTENSION FOR TESTING. ALL TESTING COSTS ARE AT THE CONTRACTOR'S EXPENSE.
2. RECYCLED CRUSHED CONCRETE AND ASPHALT MILLINGS SHALL NOT BE PLACED WITHIN 2'-6" OF FINISH GRADE IN PROPOSED LANDSCAPE AREAS.
3. IMPORTED FILL SHALL CONTAIN NO CONTAMINATION IN EXCEEDENCE OF THE PROJECT STATE ENVIRONMENTAL REVIEW AGENCY STANDARDS AND MEET THE ENVIRONMENTAL REQUIREMENTS FOR THE PROJECT. THE CONTRACTOR SHALL PROVIDE DOCUMENTATION OF COMPLIANCE PRIOR TO DELIVERY OF ANY FILL TO THE SITE.
4. CONTRACTOR TO LIGHTLY COMPACT ALL PLACED PLANTING SOILS AND RAISE GRADES ACCORDINGLY TO ALLOW FOR FUTURE SETTLEMENT OF PLANTING SOILS (TYP.)
5. NO STONES, WOOD CHIPS, OR DEBRIS LARGER THAN 1/2" SHALL BE ACCEPTABLE WITHIN PLANTING AREAS.

6 SOIL DETAIL
NTS

No.	Description	Date
1.	REVISIONS PER TOWNSHIP AND COUNTY COMMENTS	8/8/2016

REVISIONS

JAYNE O. SPECTOR — DATE
LANDSCAPE ARCHITECT
P.A. Lic. No. LA001000R

LANGAN
30 South 17th Street, Suite 1300, Philadelphia, PA 19103
T: 215.864.0640 F: 215.864.0671 www.langan.com
NEW JERSEY NEW YORK CONNECTICUT PENNSYLVANIA OHIO VIRGINIA WASHINGTON DC FLORIDA NORTH DAKOTA CALIFORNIA
ABU DHABI ATHENS DOHA DUBAI ISTANBUL
Langan Engineering, Environmental, Surveying and Landscape Architecture, D.P.C.
Langan Engineering and Environmental Services, Inc.
Langan CT, Inc.
Langan International LLC
Collectively known as Langan

Project

THE MARKETPLACE AT NESHAMINY

BENSALEM TOWNSHIP
BUCKS COUNTY PENNSYLVANIA

Drawing Title

POST-CONSTRUCTION STORMWATER MANAGEMENT LANDSCAPE NOTES AND DETAILS

Project No. 220048102	Drawing No. CG-302
Date 24 JUNE 2016	
Scale AS ASHOWN	
Drawn By JP	
Checked By JOS	SHEET 16 OF 29

© 2016 Langan

Filename: \\langan.com\data\PH\data1\220048102\Cadd Data - 220048102\SheetFiles\2016.08.08 - NPDES Revised Submission\220048102-CG-302.dwg Date: 8/15/2016 Time: 09:24 User: ddonchez Style Table: Langan.stb Layout: LP-501

PENNDOT INLET FRAMES

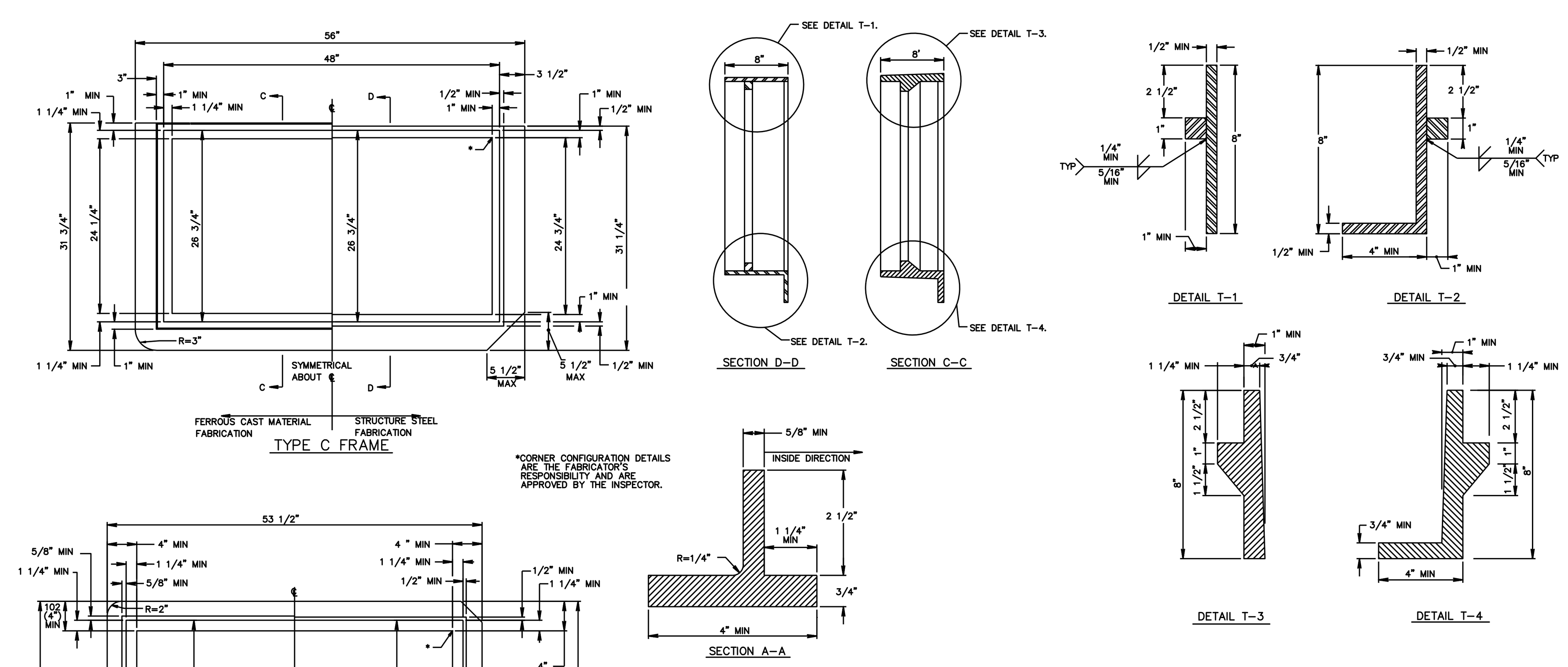

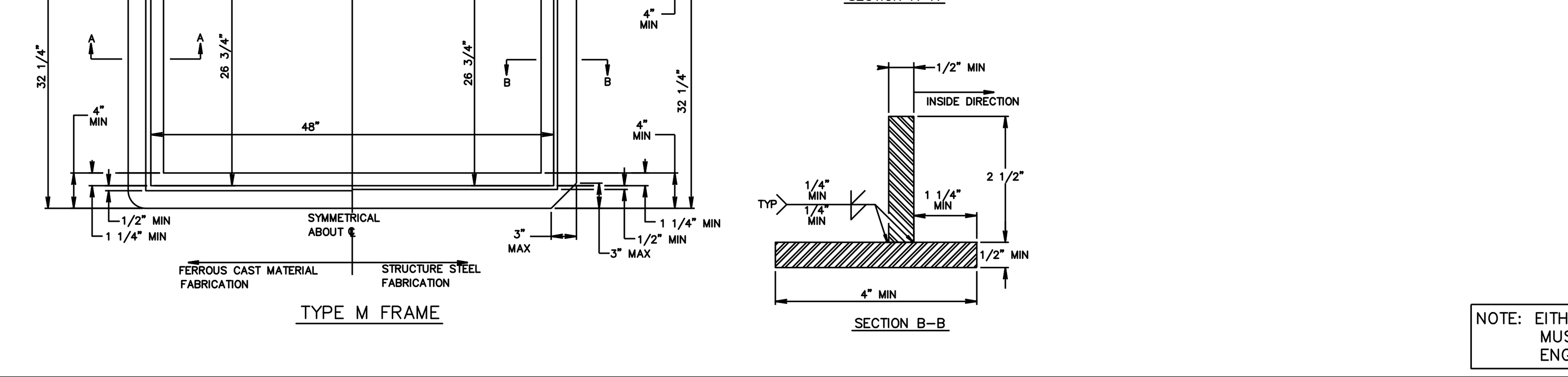

NOTES

1. THIS SHEET DEPICTS THE DIMENSIONS REQUIRED FOR UNIFORMITY AND INTERCHANGEABILITY. IT DOES NOT INCLUDE DETAILS REQUIRED FOR FABRICATION OR MANUFACTURING. PERMIT ONLY FRAMES SUPPLIED BY A MANUFACTURER LISTED IN BULLETIN 15. FOR DEVIATIONS OR MODIFICATIONS OF THE STANDARDS SUBMIT SHOP DRAWINGS FOR APPROVAL.
2. PROVIDE EITHER GRAY, MALLEABLE OR DUCTILE IRON CASTINGS OR STRUCTURAL STEEL FRAMES.
3. WELD STRUCTURAL STEEL FRAMES IN ACCORDANCE WITH THE REQUIREMENTS OF PUBLICATION 408, SECTION 1105.03(r).
4. ALL INLETS AND BOXES OVER 4' IN DEPTH SHALL PROVIDE POLYPROPYLENE PLASTIC COATED 1/2" DIAMETER GRADE 60 STEEL REINFORCED STEPS AT 12" ON CENTER.

NOTE: EITHER ALL METRIC OR ALL ENGLISH VALUES MUST BE USED ON PLANS. METRIC AND ENGLISH VALUES SHOWN MAY NOT BE MIXED.

PENNDOT INLET ASSEMBLIES

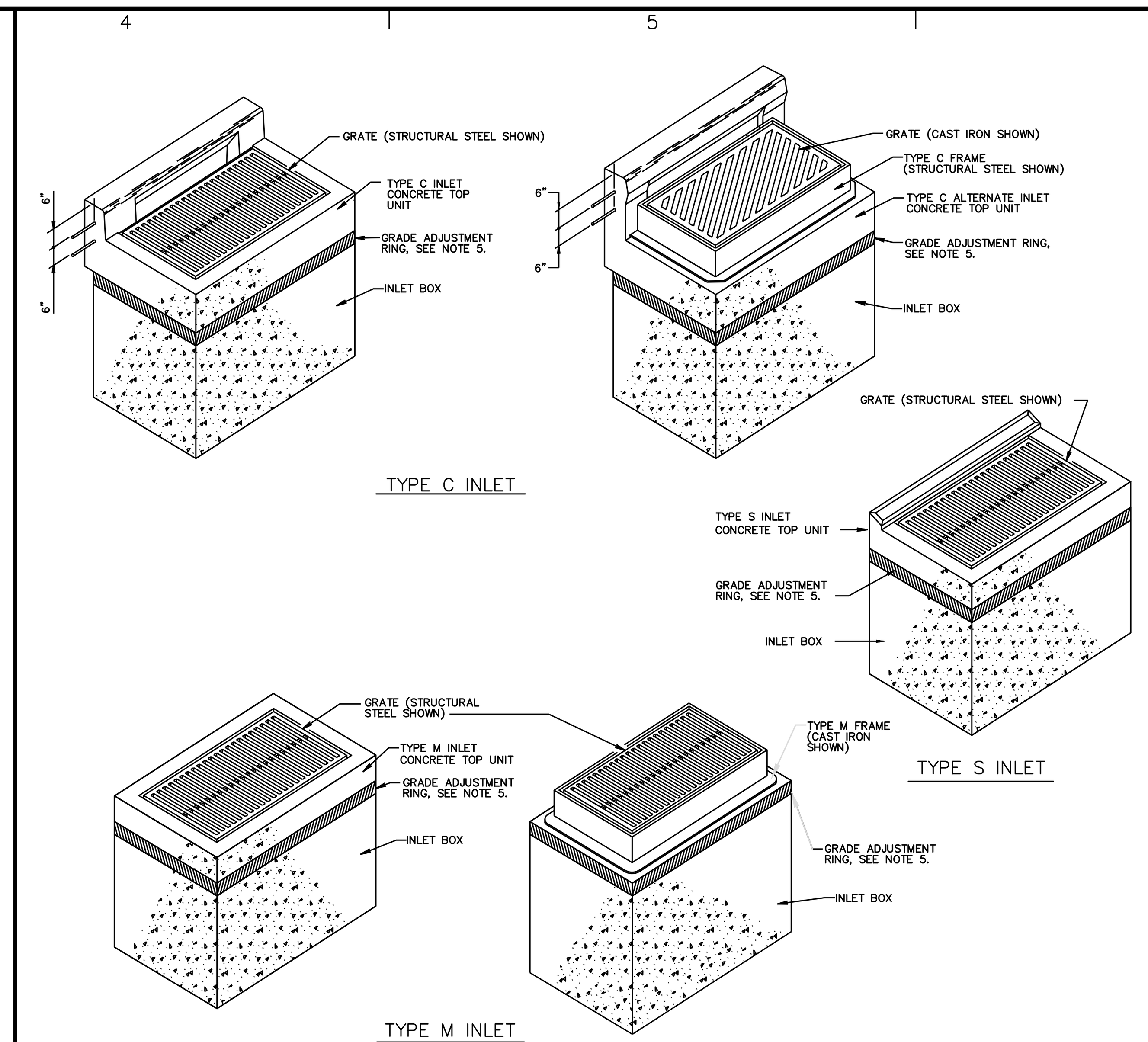

NOTES

1. CONSTRUCTION REQUIREMENTS:
   A. CONSTRUCT IN ACCORDANCE WITH PUBLICATION 408, SECTIONS 605, 606 AND 714; AND AS MODIFIED HEREIN.
   B. MINIMUM CONCRETE CLASS:
      CAST–IN–PLACE CLASS A
      PRECAST CLASS AA
   C. PROVIDE STEEL REINFORCEMENT IN ACCORDANCE WITH PUBLICATION 408, SECTION 709. PROVIDE MINIMUM YIELD STRENGTH OF 60,000 PSI.
   D. CLEAR COVER FOR STEEL:
      WALLS: CAST–IN PLACE 2"; PRECAST 1 1/2"
      FOOTINGS: CAST–IN PLACE 2 1/2" TOP BARS, 3" BOTTOM BARS, 2" SIDE COVER; PRECAST 2" TOP BARS, 1 1/2" BOTTOM BARS, 1 1/2" SIDE COVER
      SLABS: CAST–IN PLACE 2" TOP & BOTTOM BARS
2. THIS SHEET DEPICTS THE VARIOUS COMPONENTS REQUIRED FOR COMPLETE INLET ASSEMBLIES. FOR INDIVIDUAL COMPONENTS AND OTHER SPECIAL DETAILS, SEE THE FOLLOWING:
   - SHEET 2 OF 10 FOR CONCRETE TOP UNITS.
   - SHEET 3, 4 & 5 OF 10 FOR GRATES AND GRADE ADJUSTMENT RINGS.
   - SHEET 6 OF 10 FOR FRAMES.
   - SHEET 7 OF 10 FOR STANDARD INLET BOXES (CAST–IN–PLACE).
   - SHEET 8 OF 10 FOR STANDARD INLET BOXES (PRECAST).
   - SHEET 9 OF 10 FOR MODIFIED INLET BOXES (CAST–IN–PLACE AND PRECAST).
   - SHEET 10 OF 10 FOR TYPE D–H INLET.
3. EACH TYPE OF INLET SHOWN IS SUITED FOR A PARTICULAR SITUATION AS FOLLOWS:
   - TYPE C INLET IS DESIGNATED FOR INSTALLATION WITH NON–MOUNTABLE CURBS.
   - TYPE M INLET IS DESIGNATED FOR INSTALLATION IN MEDIAN AREAS AND MOUNTABLE CURBS.
   - TYPE S INLET IS DESIGNATED FOR INSTALLATION IN SHOULDER SWALE AREAS.
4. THE SELECTION OF COMPONENTS TO ACHIEVE A SPECIFIED INLET ASSEMBLY IS THE CONTRACTOR'S RESPONSIBILITY.
5. USE PRECAST CONCRETE OR STEEL GRADE ADJUSTMENT RINGS WHEN REQUIRED. (REHABILITATION PROJECTS)
6. FOR WALL REINFORCEMENT, BOTH DIRECTIONS, USE 10" MIN EACH WAY, EACH FACE 6" MAX. SPACING.
7. FOR FOOTING REINFORCEMENT, TOP AND BOTTOM, USE #13 (#4) BARS AT 12" CENTERS EACH WAY OR 17" WWF 6" MAX. SPACING.
8. ALL DIMENSIONS ARE IN INCHES UNLESS OTHERWISE NOTED.
9. PROVIDE WEEP HOLES ON INLET BOXES WHEN REQUIRED.
10. PIPES MAY BE CONNECTED TO DRAINAGE STRUCTURES (PRECAST INLETS, ETC.) WITH MORTAR OR WATERTIGHT RUBBER FLEXIBLE CONNECTORS.
11. ALL INLETS AND BOXES OVER 4' IN DEPTH SHALL PROVIDE POLYPROPYLENE PLASTIC COATED 1/2" DIAMETER GRADE 60 STEEL REINFORCED STEPS AT 12" ON CENTER.
12. ALL AREAS ADJACENT TO STRAIGHT CURBS, INLET UTILITY COVERS AND TRENCH REPAIR AREAS SHALL BE SEALED WITH AC–20.

NOTE: EITHER ALL METRIC OR ALL ENGLISH VALUES MUST BE USED ON PLANS. METRIC AND ENGLISH VALUES SHOWN MAY NOT BE MIXED.

PRECAST MANHOLE DETAILS

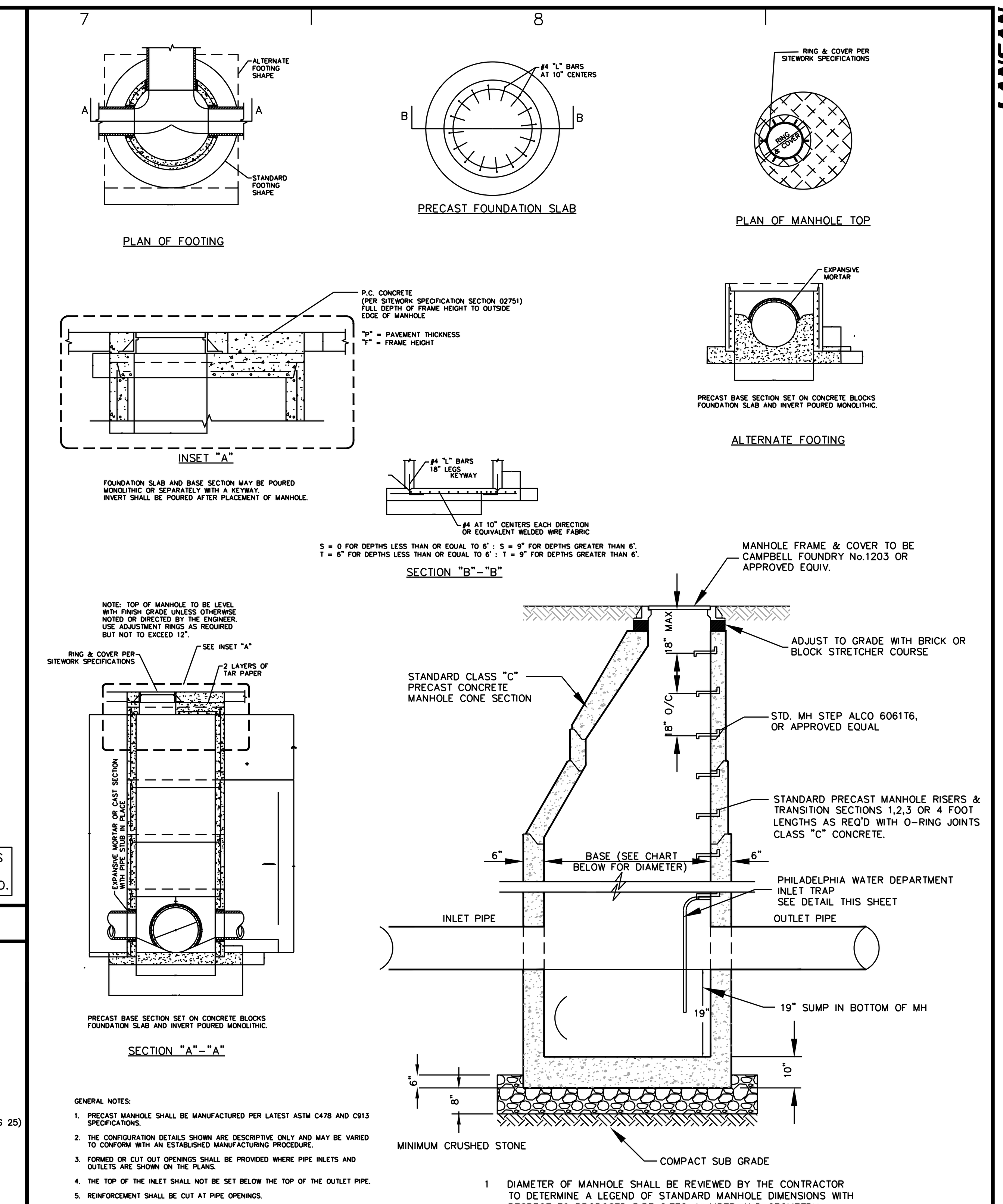

GENERAL NOTES:

1. PRECAST MANHOLE SHALL BE MANUFACTURED PER LATEST ASTM C478 AND C913 SPECIFICATIONS.
2. THE CONFIGURATION DETAILS SHOWN ARE DESCRIPTIVE ONLY AND MAY BE VARIED TO CONFORM WITH AN ESTABLISHED MANUFACTURING PROCEDURE.
3. FORMED OR CUT OUT OPENINGS SHALL BE PROVIDED WHERE PIPE INLETS AND OUTLETS ARE SHOWN ON THE PLANS.
4. THE TOP OF THE INLET SHALL NOT BE SET BELOW THE TOP OF THE OUTLET PIPE.
5. REINFORCEMENT SHALL BE CUT AT PIPE OPENINGS.
6. WHERE PIPES DO NOT ENTER OR EXIT RADIALLY, USE NEXT LARGER SIZE MANHOLE.
7. CIRCUMFERENTIAL REINFORCEMENT SIZE AND PLACEMENT SHALL BE IN ACCORDANCE WITH THE STANDARD SPECIFICATIONS TO A MAXIMUM DEPTH OF 20 FEET. OVER 20 FOOT DEPTH CIRCUMFERENTIAL REINFORCEMENT IS INCREASED TO 0.24 SQUARE INCHES STEEL REQUIRED PER LINEAR FOOT, TO A MAXIMUM DEPTH OF 30 FEET.
8. FOR PIPE CONNECTIONS, A RUBBER GASKET IN ACCORDANCE WITH ASTM RUBBER GASKET SPECIFICATIONS C443 OR C923 AND CAST INTEGRALLY IN MANHOLE MAY BE USED AS AN ALTERNATE TO EXPANSIVE MORTAR.

1 DIAMETER OF MANHOLE SHALL BE REVIEWED BY THE CONTRACTOR TO DETERMINE A LEGEND OF STANDARD MANHOLE DIMENSIONS WITH RESPECT TO PROPOSED PIPE SIZES, NUMBER AND GEOMETRY. OVER SIZE MANHOLES SHALL BE PROVIDED IF MINIMUM 6" WALL DIMENSION BETWEEN PIPES IS NOT MANUFACTURED.

2 MANHOLES SHALL BE STANDARD PRECAST CONCRETE UNITS AND SHALL BE DESIGNED AND CONSTRUCTED BY THE MANUFACTURER TO SUPPORT TRUCK HS20 LOADING.

PENNDOT INLET GRATES

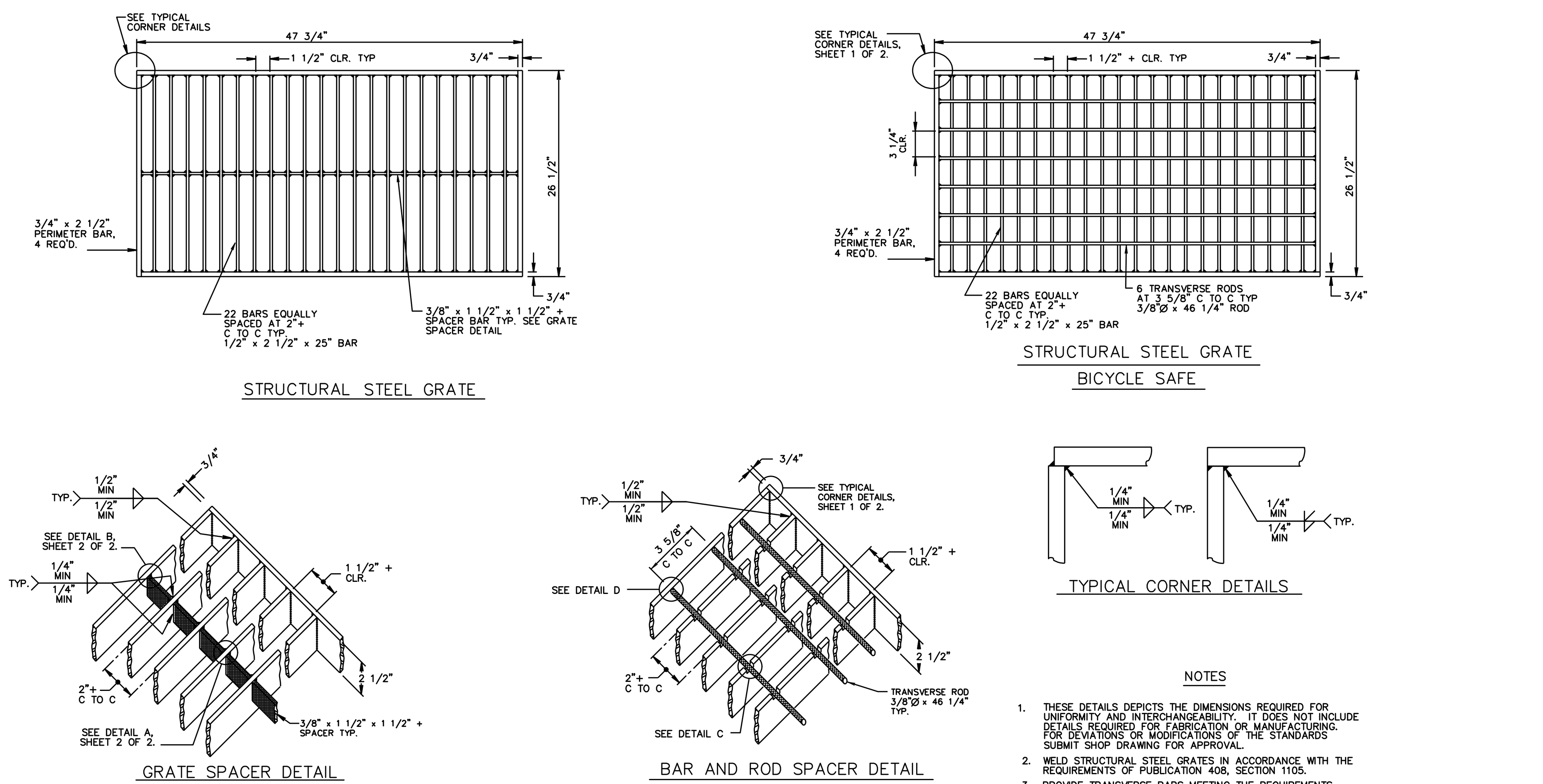

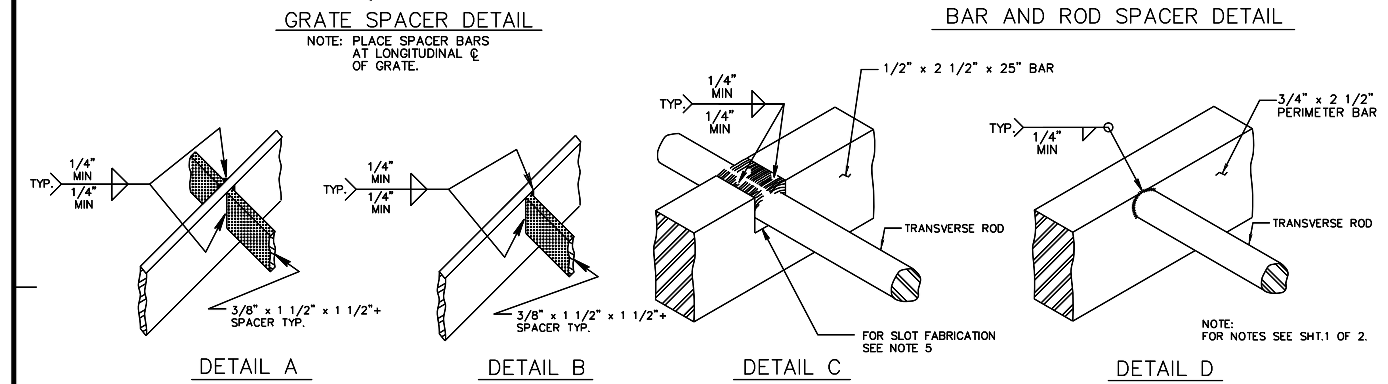

NOTES

1. THESE DETAILS DEPICTS THE DIMENSIONS REQUIRED FOR UNIFORMITY AND INTERCHANGEABILITY. IT DOES NOT INCLUDE DETAILS REQUIRED FOR FABRICATION OR MANUFACTURING. FOR DEVIATIONS OR MODIFICATIONS OF THE STANDARDS SUBMIT SHOP DRAWING FOR APPROVAL.
2. WELD STRUCTURAL STEEL GRATES IN ACCORDANCE WITH THE REQUIREMENTS OF PUBLICATION 408, SECTION 1105.
3. PROVIDE TRANSVERSE BARS MEETING THE REQUIREMENTS OF PUBLICATION 408. PROVIDE GRADE 345 (GRADE 50) STRUCTURAL STEEL FOR ALL PERIMETER AND BEARING BARS.
4. PROVIDE BICYCLE–SAFE, STRUCTURAL STEEL OR CAST IRON VANE GRATES FOR INSTALLATION WHERE BICYCLE TRAFFIC IS ANTICIPATED, SUCH AS CURBED ROADWAYS IN URBAN AREAS OR ROADWAYS SPECIFICALLY ESTABLISHED AND SIGNED AS BIKEWAYS OR HAVING BIKE LANES. ALTERNATE BICYCLE–SAFE GRATE DESIGNS REQUIRE A SHOP DRAWING SUBMISSION, AS SPECIFIED IN NOTE 1, AND MUST CONFORM TO THE DIMENSIONAL REQUIREMENTS FOR PROPER INSTALLATION WITH THE CURRENT CONCRETE TOP UNITS.
5. FABRICATE SLOTS BY BURNING, DRILLING, SHEARING OR PUNCHING. HAVE THE BOTTOM OF ALL BURNED OR DRILLED SLOTS CONFORM TO THE SHAPE OF THE ROD.
6. PROVIDE STRUCTURAL STEEL GRATES WITH THE GRATE SPACERS LOCATED FLUSH ALONG THE TOP SURFACE OF THE GRATE.
7. PROVIDE A 1" WIDE YELLOW PAINT STRIP LENGTHWISE ALONG THE TOP OF THE INLET GRATE AS A FIELD IDENTIFIER OF CONFORMANCE TO THESE DETAILS. FOR PERMANENT IDENTIFICATION PLACE TWO RAISED WELD BEADS, EACH TWO INCHES LONG, ON THE CENTER TOP OF ONE LONGITUDINAL PERIMETER BAR.

NOTE: EITHER ALL METRIC OR ALL ENGLISH VALUES MUST BE USED ON PLANS. METRIC AND ENGLISH VALUES SHOWN MAY NOT BE MIXED.

PENNDOT STANDARD INLET BOXES (PRECAST)

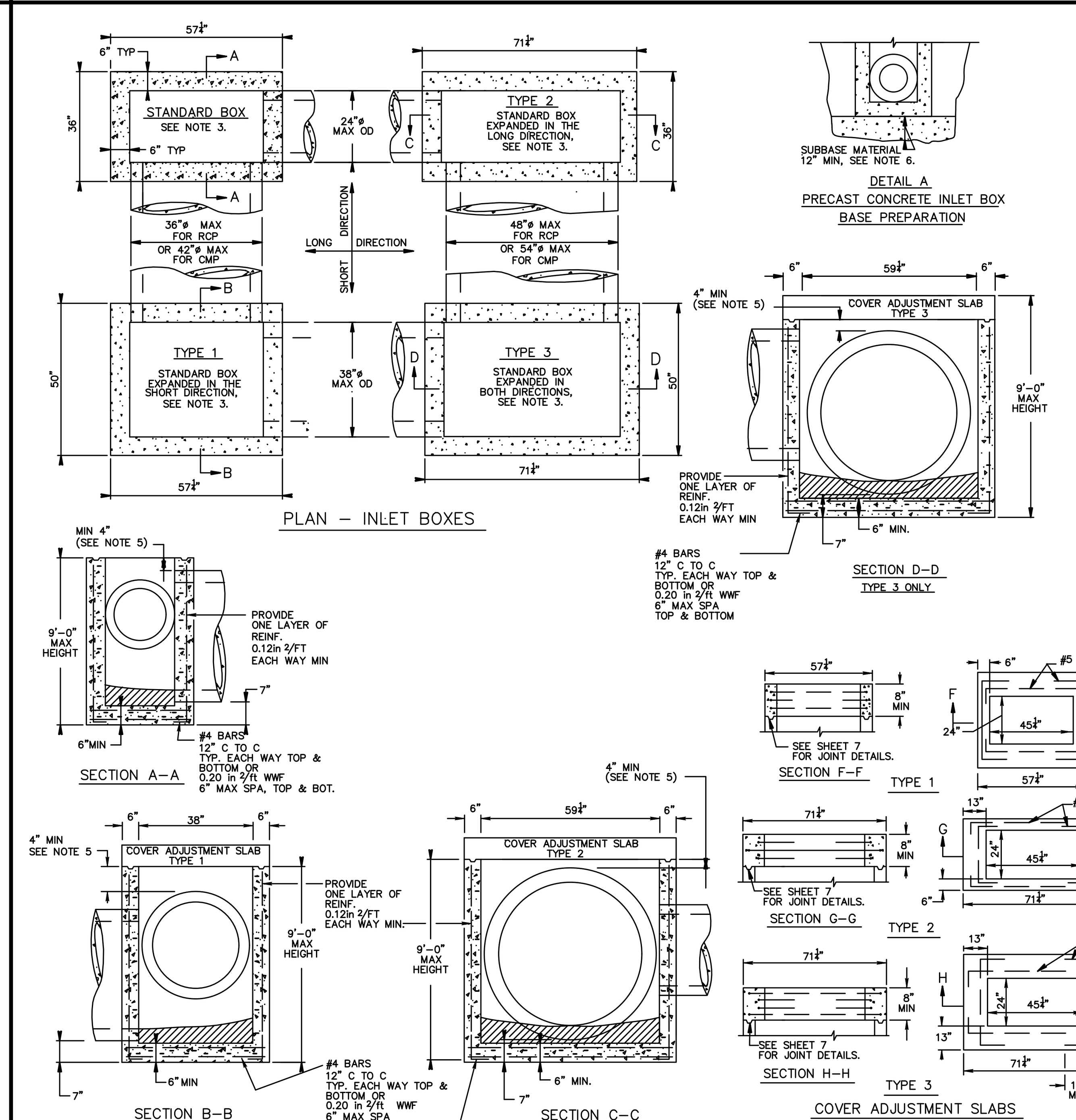

NOTES

1. CONSTRUCT INLET BOXES IN ACCORDANCE WITH THE REQUIREMENTS OF PUBLICATION 408, SECTION 714.
2. PERMIT ONLY PRECAST INLET BOXES SUPPLIED BY A MANUFACTURER LISTED IN BULLETIN 15. USE CLASS AA CEMENT CONC FOR PRECAST BOXES. FOR DEVIATIONS OR MODIFICATIONS OF THE STANDARDS, SUBMIT SHOP DRAWINGS FOR APPROVAL.
3. PROVIDE STANDARD INLET BOXES AND COVER ADJUSTMENT SLABS WITH A 24"x 46" OPENING TO ACCOMMODATE STANDARD TOP COMPONENTS.
4. FOR INLETS THAT DEVIATE FROM THE STANDARD SUBMIT SPECIAL DETAILS AND DESIGN FOR THE INLET WALLS AND BASE TO THE BUREAU OF CONSTRUCTION FOR REVIEW AND APPROVAL. CONSTRUCT INLETS THAT EXCEED 5' IN HEIGHT WITH STEPS SIMILAR TO MANHOLES (SEE RC–39M). FOR INLETS OTHER THAN AS SHOWN ON THE STANDARDS, PROVIDE REINFORCEMENT BASED ON PHL 93 (HS 25) LOADING AND IN ACCORDANCE WITH PUBLICATION 408.
5. LOCATE PIPE OR PIPES, AS INDICATED, WITH THE INLET BOTTOM SHAPED TO CHANNEL THE FLOW TOWARD THE OUTLET PIPE. WHEN PROJECT CONDITIONS REQUIRE PIPE BLOCKOUTS TO BE FORMED WITHIN 4" FROM THE TOP OF THE INLET BOX, PROVIDE AN ADDITIONAL #3 REINFOREMENT BAR LOCATED 18" FROM THE TOP OF THE INLET BASE, FULL WIDTH ALONG THE INLET FACE. REMOVE ANY VISIBLE PORTION OF THE BAR, IF REQUIRED DURING INSTALLATION AND PRIOR TO JOINING THE PIPE TO THE INLET. IF REINFORCED CONCRETE PIPE IS USED, THE PIPE BLOCKOUT MAY BE FORMED 'FLUSH' WITH THE INLET BASE. LIMIT PIPE BLOCKOUT OF WALL TO 1".
6. PLACE SUBBASE MATERIAL MEETING THE REQUIREMENTS OF PUBLICATION 408, SECTION 350.2, IN LAYERS 4" THICK, COMPACTED TO A DENSITY SATISFACTORY TO THE ENGINEER AND INCIDENTAL TO THE INLET PAY ITEM.
7. FOR PIPE DIAMETERS LARGER THAN 48" RCP OR 54" CMP, USE A MODIFIED INLET BOX, SHEET 9.
8. PROVIDE CONSTRUCTION JOINTS AS REQUIRED FOR INLET BOXES THAT ARE NOT MONOLITHIC. SEE DETAILS A & B SHEET 7.
9. TAPERS MAY BE PROVIDED ON VERTICAL FACES OF PRECAST INLET BOX BASE UNITS TO FACILITATE FORM STRIPPING. TAPERS WILL RESULT IN INTERNAL BOTTOM DIMENSIONS THAT VARY TO A MAXIMUM OF 1".
10. PROVIDE SUITABLE LIFTING DEVICES FOR HANDLING AND INSTALLATION. GALVANIZE METAL DEVICES AS SPECIFIED IN PUB. 408 SECTION 1105. TAPERS MAY BE PROVIDED ON INSIDE VERTICAL FACES OF PRECAST INLET TOPS TO FACILITATE FORM STRIPPING. TAPERS WILL RESULT IN INTERNAL BOTTOM DIMENSIONS THAT VARY TO A MAXIMUM OF 1".

LEGEND

ADDITIONAL CONCRETE TO SHAPE THE BOTTOM

NOTE: EITHER ALL METRIC OR ALL ENGLISH VALUES MUST BE USED ON PLANS. METRIC AND ENGLISH VALUES SHOWN MAY NOT BE MIXED.

STRUCTURES SHOWN ON THESE DRAWINGS INCLUDING BUT NOT LIMITED DRAINAGE STRUCTURES (INLETS, CATCH BASIN AND MANHOLES), SANITARY MANHOLES, METER PITS AND UNDERGROUND VAULTS ARE NOT STRUCTURALLY DESIGNED. THE DETAILS PROVIDE TYPICAL DIMENSIONS, LOCATION OF PIPE PENETRATIONS, PIPE INVERTS AND GROUND ELEVATIONS AT THE STRUCTURE RIM OR GRATE ONLY. THE STRUCTURAL DESIGN INCLUDING WALL AND SLAB THICKNESS AS WELL AS REINFORCING SHALL BE THE RESPONSIBILITY OF THE PRECAST MANUFACTURER TO MEET STATE DEPARTMENT OF TRANSPORTATION STANDARDS AND HS-20 OR HS-25 LOADING REQUIREMENTS WHEN POSITIONING TRAVELED WAYS. STRUCTURAL DESIGN (WALL AND SLAB THICKNESS AND ALL REINFORCING), WHERE THE UNIT IS WITHIN THE TRAVELED WAY, SHALL BE BY PRECASTER AND SHALL MEET STATE DEPARTMENT OF TRANSPORTATION STANDARDS AND SUPPORT HS-20 OR HS-25 LOADING AS REQUIRED.

ROOF DRAIN CLEANOUT

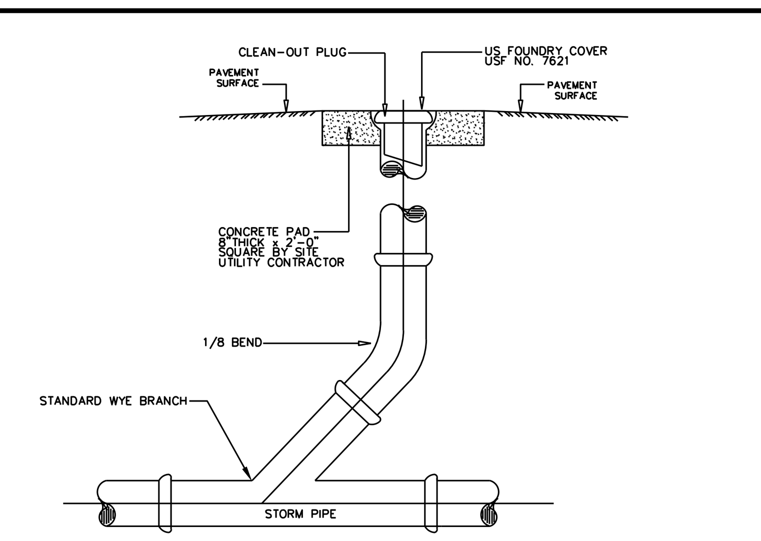

NOTES:

1. THE CONTRACTOR SHALL PROVIDE ALL APPROPRIATE AND NECESSARY FITTINGS AND ADAPTORS.
2. ROOF DRAIN CLEANOUTS TO BE LOCATED IN THE PARKING LOT, AND SHALL BE CONSTRUCTED TO WITHSTAND AN H–20 LOADING CAPACITY.

CONNECTION TO EXISTING STORM STRUCTURE

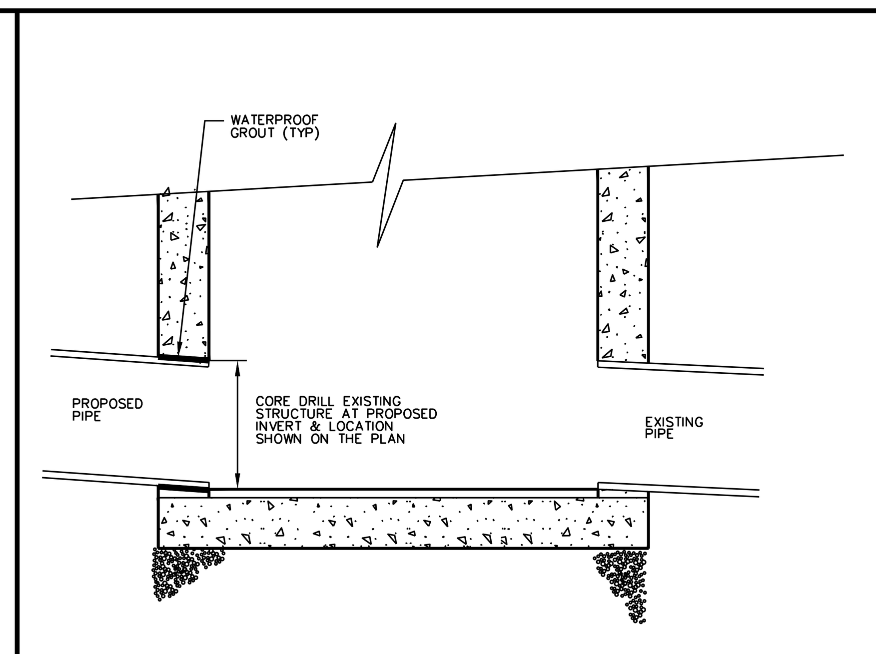

INLET STEPS

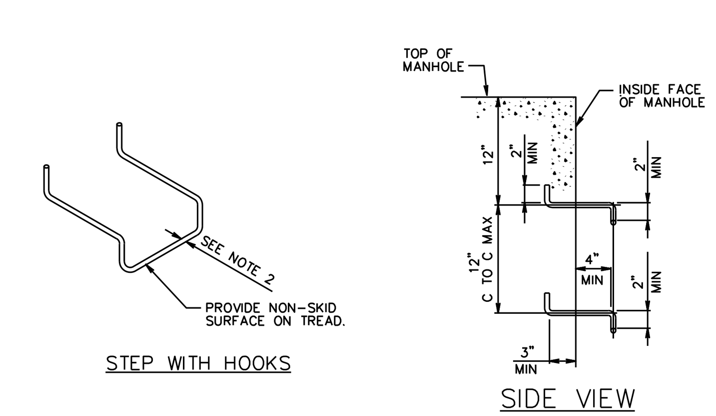

NOTES

1. PROVIDE MANHOLE STEPS MEETING THE REQUIREMENTS OF PUBLICATION 408, SECTION 605.2(c). ALTERNATE CONFIGURATIONS AND DIMENSIONS, AS APPROVED BY THE ENGINEER, MAY BE USED.
2. PROVIDE MINIMUM 1" SECTION DIMENSION FOR METAL STEPS. PROVIDE MINIMUM ¾" SECTION DIMENSION FOR NON–DETERIORATING MATERIAL STEPS.

END WALL

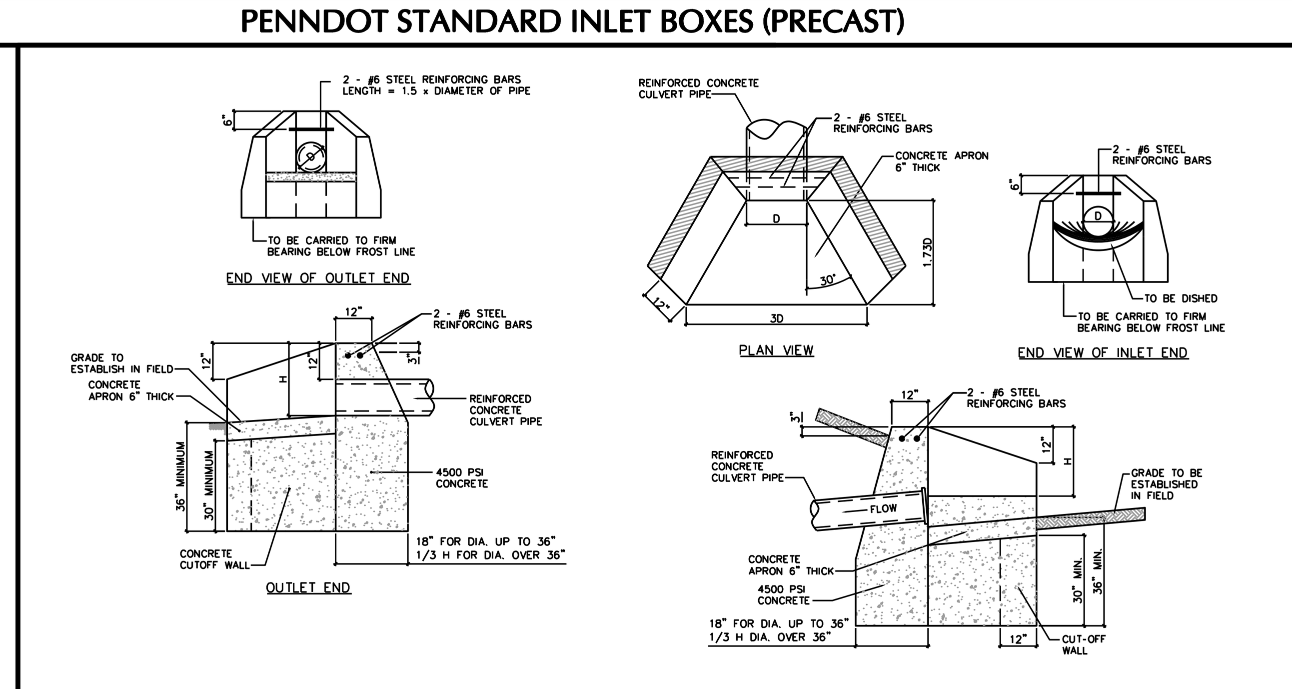

INLET END

VOLUME OF CONCRETE			
HEADWALL QUANTITIES		APRON QUANTITIES	
SIZE OF PIPE	VOL IN C.Y.	SIZE OF PIPE	VOL IN C.Y.
12"	1.7	12"	0.4
15"	2.1	15"	0.5
18"	2.5	18"	0.6
21"	3.0	21"	0.8
24"	3.4	24"	0.9
27"	4.0	27"	1.1
30"	4.5	30"	1.2
36"	5.6	36"	1.5
42"	7.9	42"	1.9
48"	10.6	48"	2.3
54"	12.3	54"	2.7
60"	16.6	60"	3.2
66"	20.5	66"	3.7
72"	24.8	72"	4.2

NOTES:

1. ALL EDGES TO BE CHAMFERED 1".
2. THE RUBBING OF HEADWALLS TO REMOVE FORM MARKS AS REQUIRED IN SECTION 501 OF 2001 STANDARDS SPECIFICATIONS FOR ROAD AND BRIDGE CONSTRUCTION.
3. THE TERMINUS FOR OUTLET AND INLET APRONS SHALL BE SET BY EXTENDING THE PIPE GRADE AHEAD AND BACK RESPECTIVELY.
4. H = OUTSIDE DIAMETER OF REINFORCED CONCRETE CULVERT PIPE - (MINUS) 12".

Date	Description	No.
8/8/2016	REVISIONS PER TOWNSHIP AND COUNTY COMMENTS	1.

REVISIONS

BRIAN M. CONLON — DATE
PROFESSIONAL ENGINEER
PA Lic. No. PE061782

LANGAN
30 South 17th Street, Suite 1300, Philadelphia, PA 19103
T: 215.864.0640 F: 215.864.0671 www.langan.com
NEW JERSEY NEW YORK CONNECTICUT PENNSYLVANIA OHIO
VIRGINIA WASHINGTON DC FLORIDA NORTH DAKOTA CALIFORNIA
ABU DHABI ATHENS DOHA DUBAI ISTANBUL
Langan Engineering, Environmental, Surveying and Landscape Architecture, D.P.C.
Langan Engineering and Environmental Services, Inc.
Langan CT, Inc.
Langan International LLC
Collectively known as Langan

Project
THE MARKETPLACE AT NESHAMINY
BENSALEM TOWNSHIP
BUCKS COUNTY **PENNSYLVANIA**

Drawing Title
STORM DRAINAGE CONSTRUCTION & DETAILS

Project No. **220048102**
Date **24 JUNE 2016**
Scale **N.T.S.**
Drawn By **TFH**
Checked By **BMC**
Drawing No. CG-501
SHEET 17 OF 29

© 2014 Langan

Filename: \\langan.com\data\PH\data1\220048102\Cadd Data - 220048102\SheetFiles\2016.08.08 - NPDES Revised Submission\220048102-CG-501.dwg Date: 8/15/2016 Time: 09:24 User: ddonchez Style Table: Langan.stb Layout: CG-501

PROJECT INFORMATION	
ENGINEERED PRODUCT MANAGER:	KIEL FORTNER 484-602-7199 KIEL.FORTNER@ADS-PIPE.COM
ADS SALES REP:	BILL HINES 610-442-8058 BILL.HINES@ADS-PIPE.COM
PROJECT NO:	148295

ADVANCED DRAINAGE SYSTEMS, INC.

THE MARKETPLACE AT NESHAMINY

BENSALEM, PENNSYLVANIA

STORMWATER CHAMBER SPECIFICATIONS

1. CHAMBERS SHALL BE STORMTECH SC-740, SC-310, OR APPROVED EQUAL.
2. CHAMBERS SHALL BE MANUFACTURED FROM VIRGIN POLYPROPYLENE OR POLYETHYLENE RESINS.
3. CHAMBER ROWS SHALL PROVIDE CONTINUOUS, UNOBSTRUCTED INTERNAL SPACE WITH NO INTERNAL SUPPORT PANELS THAT WOULD IMPEDE FLOW OR LIMIT ACCESS FOR INSPECTION.
4. THE STRUCTURAL DESIGN OF THE CHAMBERS, THE STRUCTURAL BACKFILL, AND THE INSTALLATION REQUIREMENTS SHALL ENSURE THAT THE LOAD FACTORS SPECIFIED IN THE AASHTO LRFD BRIDGE DESIGN SPECIFICATIONS, SECTION 12.12, ARE MET FOR: 1) LONG-DURATION DEAD LOADS AND 2) SHORT-DURATION LIVE LOADS, BASED ON THE AASHTO DESIGN TRUCK WITH CONSIDERATION FOR IMPACT AND MULTIPLE VEHICLE PRESENCES.
5. CHAMBERS SHALL MEET ASTM F2922 (POLYETHYLENE) OR ASTM F2418 (POLYPROPYLENE), "STANDARD SPECIFICATION FOR THERMOPLASTIC CORRUGATED WALL STORMWATER COLLECTION CHAMBERS".
6. CHAMBERS SHALL BE DESIGNED AND ALLOWABLE LOADS DETERMINED IN ACCORDANCE WITH ASTM F2787, "STANDARD PRACTICE FOR STRUCTURAL DESIGN OF THERMOPLASTIC CORRUGATED WALL STORMWATER COLLECTION CHAMBERS".
7. ONLY CHAMBERS THAT ARE APPROVED BY THE SITE DESIGN ENGINEER WILL BE ALLOWED. THE CHAMBER MANUFACTURER SHALL SUBMIT THE FOLLOWING UPON REQUEST TO THE SITE DESIGN ENGINEER FOR APPROVAL BEFORE DELIVERING CHAMBERS TO THE PROJECT SITE:
   a. A STRUCTURAL EVALUATION SEALED BY A REGISTERED PROFESSIONAL ENGINEER THAT DEMONSTRATES THAT THE SAFETY FACTORS ARE GREATER THAN OR EQUAL TO 1.95 FOR DEAD LOAD AND 1.75 FOR LIVE LOAD, THE MINIMUM REQUIRED BY ASTM F2787 AND BY AASHTO FOR THERMOPLASTIC PIPE.
   b. A STRUCTURAL EVALUATION SEALED BY A REGISTERED PROFESSIONAL ENGINEER THAT DEMONSTRATES THAT THE LOAD FACTORS SPECIFIED IN THE AASHTO LRFD BRIDGE DESIGN SPECIFICATIONS, SECTION 12.12, ARE MET. THE 50 YEAR CREEP MODULUS DATA SPECIFIED IN ASTM F2418 OR ASTM F2922 MUST BE USED AS PART OF THE AASHTO STRUCTURAL EVALUATION TO VERIFY LONG-TERM PERFORMANCE.
   c. STRUCTURAL CROSS SECTION DETAIL ON WHICH THE STRUCTURAL EVALUATION IS BASED.
8. CHAMBERS AND END CAPS SHALL BE PRODUCED AT AN ISO 9001 CERTIFIED MANUFACTURING FACILITY.

IMPORTANT - NOTES FOR THE BIDDING AND INSTALLATION OF THE SC-310/SC-740 SYSTEM

1. STORMTECH SC-310 & SC-740 CHAMBERS SHALL NOT BE INSTALLED UNTIL THE MANUFACTURER'S REPRESENTATIVE HAS COMPLETED A PRE-CONSTRUCTION MEETING WITH THE INSTALLERS.
2. STORMTECH SC-310 & SC-740 CHAMBERS SHALL BE INSTALLED IN ACCORDANCE WITH THE "STORMTECH SC-310/SC-740/SC-780 CONSTRUCTION GUIDE".
3. CHAMBERS ARE NOT TO BE BACKFILLED WITH A DOZER OR AN EXCAVATOR SITUATED OVER THE CHAMBERS. STORMTECH RECOMMENDS 3 BACKFILL METHODS:
   - STONESHOOTER LOCATED OFF THE CHAMBER BED.
   - BACKFILL AS ROWS ARE BUILT USING AN EXCAVATOR ON THE FOUNDATION STONE OR SUBGRADE.
   - BACKFILL FROM OUTSIDE THE EXCAVATION USING A LONG BOOM HOE OR EXCAVATOR.
4. THE FOUNDATION STONE SHALL BE LEVELED AND COMPACTED PRIOR TO PLACING CHAMBERS.
5. JOINTS BETWEEN CHAMBERS SHALL BE PROPERLY SEATED PRIOR TO PLACING STONE.
6. MAINTAIN MINIMUM - 6" (150 mm) SPACING BETWEEN THE CHAMBER ROWS.
7. EMBEDMENT STONE SURROUNDING CHAMBERS MUST BE A CLEAN, CRUSHED, ANGULAR STONE 3/4-2" (20-50 mm).
8. THE CONTRACTOR MUST REPORT ANY DISCREPANCIES WITH CHAMBER FOUNDATION MATERIALS BEARING CAPACITIES TO THE SITE DESIGN ENGINEER.
9. ADS RECOMMENDS THE USE OF "FLEXSTORM CATCH IT" INSERTS DURING CONSTRUCTION FOR ALL INLETS TO PROTECT THE SUBSURFACE STORMWATER MANAGEMENT SYSTEM FROM CONSTRUCTION SITE RUNOFF.

NOTES FOR CONSTRUCTION EQUIPMENT

1. STORMTECH SC-310 & SC-740 CHAMBERS SHALL BE INSTALLED IN ACCORDANCE WITH THE "STORMTECH SC-310/SC-740/DC-780 CONSTRUCTION GUIDE".
2. THE USE OF CONSTRUCTION EQUIPMENT OVER SC-310 & SC-740 CHAMBERS IS LIMITED:
   - NO EQUIPMENT IS ALLOWED ON BARE CHAMBERS.
   - NO RUBBER TIRED LOADERS, DUMP TRUCKS, OR EXCAVATORS ARE ALLOWED UNTIL PROPER FILL DEPTHS ARE REACHED IN ACCORDANCE WITH THE "STORMTECH SC-310/SC-740/DC-780 CONSTRUCTION GUIDE".
   - WEIGHT LIMITS FOR CONSTRUCTION EQUIPMENT CAN BE FOUND IN THE "STORMTECH SC-310/SC-740/DC-780 CONSTRUCTION GUIDE".
3. FULL 36" (900 mm) OF STABILIZED COVER MATERIALS OVER THE CHAMBERS IS REQUIRED FOR DUMP TRUCK TRAVEL OR DUMPING.

USE OF A DOZER TO PUSH EMBEDMENT STONE BETWEEN THE ROWS OF CHAMBERS MAY CAUSE DAMAGE TO THE CHAMBERS AND IS NOT AN ACCEPTABLE BACKFILL METHOD. ANY CHAMBERS DAMAGED BY THE "DUMP AND PUSH" METHOD ARE NOT COVERED UNDER THE STORMTECH STANDARD WARRANTY.

CONTACT STORMTECH AT 1-888-892-2694 WITH ANY QUESTIONS ON INSTALLATION REQUIREMENTS OR WEIGHT LIMITS FOR CONSTRUCTION EQUIPMENT.

©2013 ADS, INC.

CONCEPTUAL LAYOUT

(828) STORMTECH SC-740 CHAMBERS
(44) STORMTECH SC-740 END CAPS
INSTALLED WITH 6" COVER STONE, 6" BASE STONE, 40% STONE VOID
INSTALLED SYSTEM VOLUME: 62017 CF
AREA OF SYSTEM: 29374 **FT²**
PERIMETER OF SYSTEM: 770 **FT**

COMPUTER GENERATED CONCEPTUAL LAYOUT - NOT FOR CONSTRUCTION

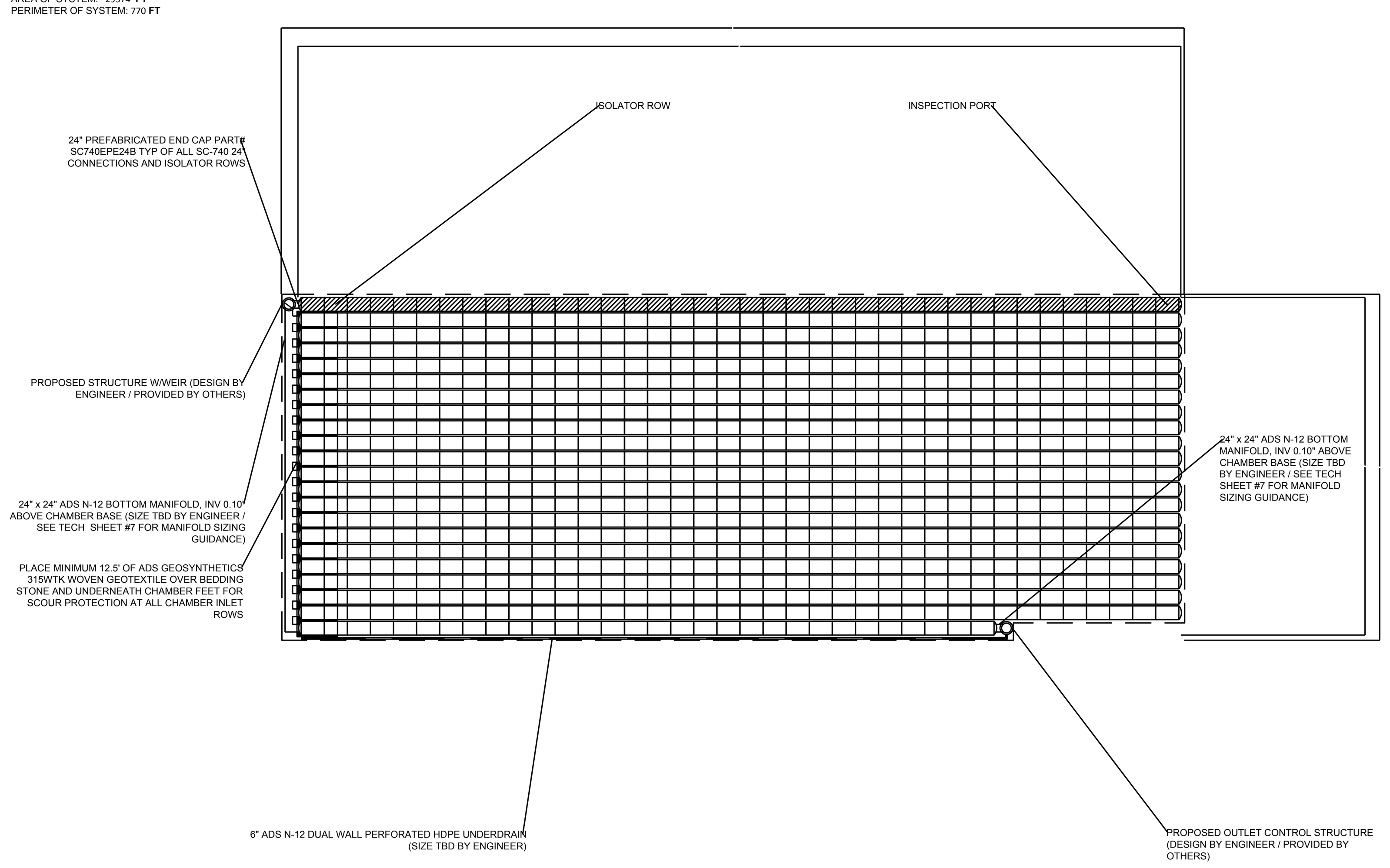

Nesaminy | DATE: 05/19/2016 | DRAWN: TH | PROJECT #: Tool | CHECKED: ---

4640 TRUEMAN BLVD HILLIARD, OH 43026 1-800-733-7473

NOT TO SCALE

SHEET 2 OF 5

ACCEPTABLE FILL MATERIALS: STORMTECH SC-740 CHAMBER SYSTEMS

	MATERIAL LOCATION	DESCRIPTION	AASHTO MATERIAL CLASSIFICATIONS	COMPACTION / DENSITY REQUIREMENT
D	**FINAL FILL:** FILL MATERIAL FOR LAYER 'D' STARTS FROM THE TOP OF THE 'C' LAYER TO THE BOTTOM OF FLEXIBLE PAVEMENT OR UNPAVED FINISHED GRADE ABOVE. NOTE THAT PAVEMENT SUBBASE MAY BE PART OF THE 'D' LAYER	ANY SOIL/ROCK MATERIALS, NATIVE SOILS, OR PER ENGINEER'S PLANS. CHECK PLANS FOR PAVEMENT SUBGRADE REQUIREMENTS.	N/A	PREPARE PER SITE DESIGN ENGINEER'S PLANS. PAVED INSTALLATIONS MAY HAVE STRINGENT MATERIAL AND PREPARATION REQUIREMENTS.
C	**INITIAL FILL:** FILL MATERIAL FOR LAYER 'C' STARTS FROM THE TOP OF THE EMBEDMENT STONE ('B' LAYER) TO 18" (450 mm) ABOVE THE TOP OF THE CHAMBER. NOTE THAT PAVEMENT SUBBASE MAY BE A PART OF THE 'C' LAYER.	GRANULAR WELL-GRADED SOIL/AGGREGATE MIXTURES, <35% FINES OR PROCESSED AGGREGATE. MOST PAVEMENT SUBBASE MATERIALS CAN BE USED IN LIEU OF THIS LAYER.	AASHTO M145[1] A-1, A-2-4, A-3 OR AASHTO M43[1] 3, 357, 4, 467, 5, 56, 57, 6, 67, 68, 7, 78, 8, 89, 9, 10	BEGIN COMPACTIONS AFTER 12" (300 mm) OF MATERIAL OVER THE CHAMBERS IS REACHED. COMPACT ADDITIONAL LAYERS IN 6" (150 mm) MAX LIFTS TO A MIN. 95% PROCTOR DENSITY FOR WELL GRADED MATERIAL AND 95% RELATIVE DENSITY FOR PROCESSED AGGREGATE MATERIALS. ROLLER GROSS VEHICLE WEIGHT NOT TO EXCEED 12,000 lbs (53 kN). DYNAMIC FORCE NOT TO EXCEED 20,000 lbs (89 kN).
B	**EMBEDMENT STONE:** FILL SURROUNDING THE CHAMBERS FROM THE FOUNDATION STONE ('A' LAYER) TO THE 'C' LAYER ABOVE.	CLEAN, CRUSHED, ANGULAR STONE	AASHTO M43[1] 3, 357, 4, 467, 5, 56, 57	NO COMPACTION REQUIRED.
A	**FOUNDATION STONE:** FILL BELOW CHAMBERS FROM THE SUBGRADE UP TO THE FOOT (BOTTOM) OF THE CHAMBER.	CLEAN, CRUSHED, ANGULAR STONE	AASHTO M43[1] 3, 357, 4, 467, 5, 56, 57	PLATE COMPACT OR ROLL TO ACHIEVE A FLAT SURFACE. [2,3]

PLEASE NOTE:
1. THE LISTED AASHTO DESIGNATIONS ARE FOR GRADATIONS ONLY. THE STONE MUST ALSO BE CLEAN, CRUSHED, ANGULAR. FOR EXAMPLE, A SPECIFICATION FOR #4 STONE WOULD STATE: "CLEAN, CRUSHED, ANGULAR NO. 4 (AASHTO M43) STONE".
2. STORMTECH COMPACTION REQUIREMENTS ARE MET FOR 'A' LOCATION MATERIALS WHEN PLACED AND COMPACTED IN 6" (150 mm) (MAX) LIFTS USING TWO FULL COVERAGES WITH A VIBRATORY COMPACTOR.
3. WHERE INFILTRATION SURFACES MAY BE COMPROMISED BY COMPACTION, FOR STANDARD DESIGN LOAD CONDITIONS, A FLAT SURFACE MAY BE ACHIEVED BY RAKING OR DRAGGING WITHOUT COMPACTION EQUIPMENT. FOR SPECIAL LOAD DESIGNS, CONTACT STORMTECH FOR COMPACTION REQUIREMENTS.

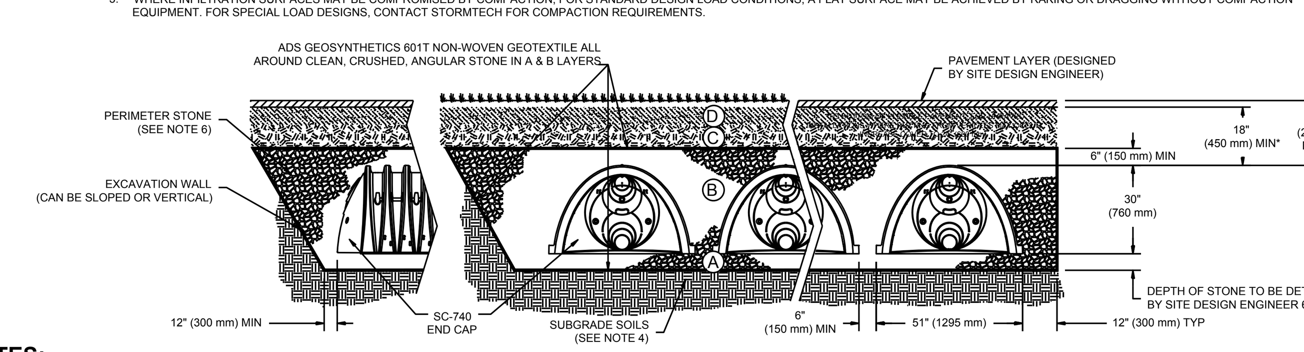

NOTES:

1. SC-740 CHAMBERS SHALL CONFORM TO THE REQUIREMENTS OF ASTM F2418 "STANDARD SPECIFICATION FOR POLYPROPYLENE (PP) CORRUGATED WALL STORMWATER COLLECTION CHAMBERS", OR ASTM F2922 "STANDARD SPECIFICATION FOR POLYETHYLENE (PE) CORRUGATED WALL STORMWATER COLLECTION CHAMBERS".
2. SC-740 CHAMBERS SHALL BE DESIGNED IN ACCORDANCE WITH ASTM F2787 "STANDARD PRACTICE FOR STRUCTURAL DESIGN OF THERMOPLASTIC CORRUGATED WALL STORMWATER COLLECTION CHAMBERS".
3. "ACCEPTABLE FILL MATERIALS" TABLE ABOVE PROVIDES MATERIAL LOCATIONS, DESCRIPTIONS, GRADATIONS, AND COMPACTION REQUIREMENTS FOR FOUNDATION, EMBEDMENT, AND FILL MATERIALS.
4. THE SITE DESIGN ENGINEER IS RESPONSIBLE FOR ASSESSING THE BEARING RESISTANCE (ALLOWABLE BEARING CAPACITY) OF THE SUBGRADE SOILS AND THE DEPTH OF FOUNDATION STONE WITH CONSIDERATION FOR THE RANGE OF EXPECTED SOIL MOISTURE CONDITIONS.
5. PERIMETER STONE MUST BE EXTENDED HORIZONTALLY TO THE EXCAVATION WALL FOR BOTH VERTICAL AND SLOPED EXCAVATION WALLS.
6. ONCE LAYER 'C' IS PLACED, ANY SOIL/MATERIAL CAN BE PLACED IN LAYER 'D' UP TO THE FINISHED GRADE. MOST PAVEMENT SUBBASE SOILS CAN BE USED TO REPLACE THE MATERIAL REQUIREMENTS OF LAYER 'C' OR 'D' AT THE SITE DESIGN ENGINEER'S DISCRETION.

THE MARKETPLACE AT NESHAMINY, BENSALEM, PENNSYLVANIA | DATE: 6-1-16 | DRAWN: CTS | PROJECT #: 148295 | CHECKED: GFI

SHEET 3 OF 5

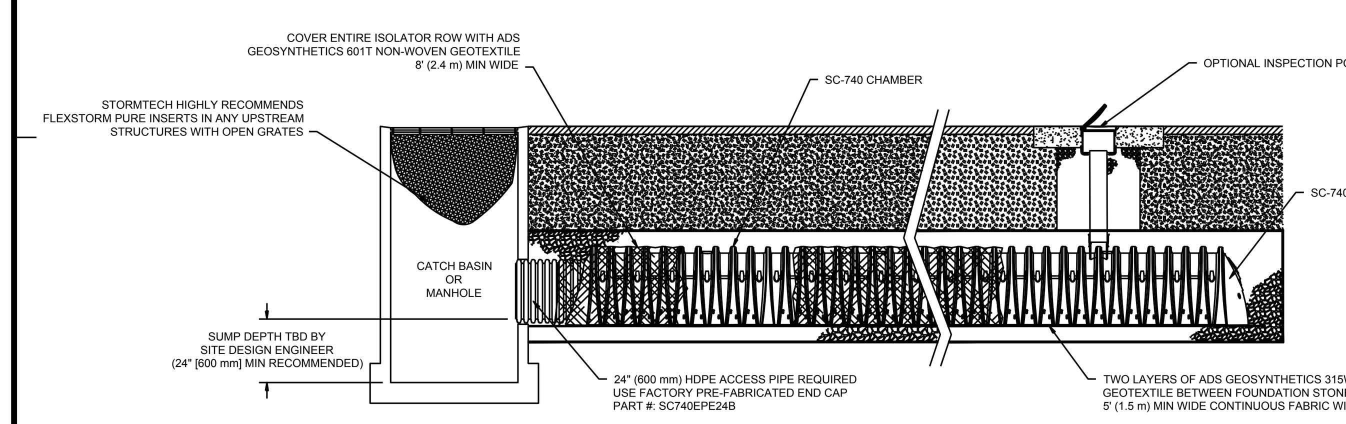

SC-740 ISOLATOR ROW DETAIL
NTS

INSPECTION & MAINTENANCE

STEP 1) INSPECT ISOLATOR ROW FOR SEDIMENT
- A. INSPECTION PORTS (IF PRESENT)
  - A.1. REMOVE/OPEN LID ON NYLOPLAST INLINE DRAIN
  - A.2. REMOVE AND CLEAN FLEXSTORM FILTER IF INSTALLED
  - A.3. USING A FLASHLIGHT AND STADIA ROD, MEASURE DEPTH OF SEDIMENT AND RECORD ON MAINTENANCE LOG
  - A.4. LOWER A CAMERA INTO ISOLATOR ROW FOR VISUAL INSPECTION OF SEDIMENT LEVELS (OPTIONAL)
  - A.5. IF SEDIMENT IS AT, OR ABOVE, 3" (80 mm) PROCEED TO STEP 2. IF NOT, PROCEED TO STEP 3.
- B. ALL ISOLATOR ROWS
  - B.1. REMOVE COVER FROM STRUCTURE AT UPSTREAM END OF ISOLATOR ROW
  - B.2. USING A FLASHLIGHT, INSPECT DOWN THE ISOLATOR ROW THROUGH OUTLET PIPE
    - i) MIRRORS ON POLES OR CAMERAS MAY BE USED TO AVOID A CONFINED SPACE ENTRY
    - ii) FOLLOW OSHA REGULATIONS FOR CONFINED SPACE ENTRY IF ENTERING MANHOLE
  - B.3. IF SEDIMENT IS AT, OR ABOVE, 3" (80 mm) PROCEED TO STEP 2. IF NOT, PROCEED TO STEP 3.

STEP 2) CLEAN OUT ISOLATOR ROW USING THE JETVAC PROCESS
- A. A FIXED CULVERT CLEANING NOZZLE WITH REAR FACING SPREAD OF 45" (1.1 m) OR MORE IS PREFERRED
- B. APPLY MULTIPLE PASSES OF JETVAC UNTIL BACKFLUSH WATER IS CLEAN
- C. VACUUM STRUCTURE SUMP AS REQUIRED

STEP 3) REPLACE ALL COVERS, GRATES, FILTERS, AND LIDS; RECORD OBSERVATIONS AND ACTIONS.

STEP 4) INSPECT AND CLEAN BASINS AND MANHOLES UPSTREAM OF THE STORMTECH SYSTEM.

NOTES

1. INSPECT EVERY 6 MONTHS DURING THE FIRST YEAR OF OPERATION. ADJUST THE INSPECTION INTERVAL BASED ON PREVIOUS OBSERVATIONS OF SEDIMENT ACCUMULATION AND HIGH WATER ELEVATIONS.
2. CONDUCT JETTING AND VACTORING ANNUALLY OR WHEN INSPECTION SHOWS THAT MAINTENANCE IS NECESSARY.

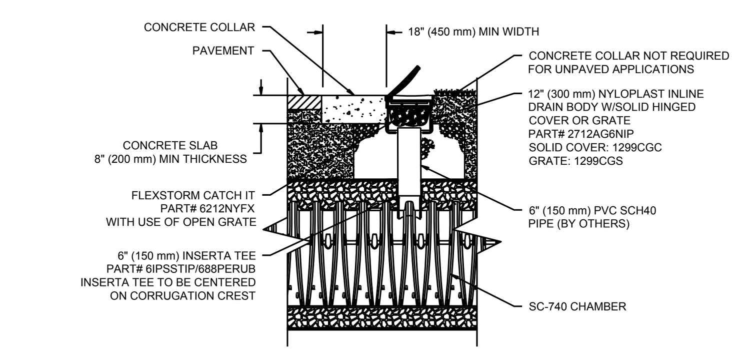

SC-740 6" INSPECTION PORT DETAIL
NTS

THE MARKETPLACE AT NESHAMINY, BENSALEM, PENNSYLVANIA | DATE: 6-1-16 | DRAWN: CTS | PROJECT #: 148295 | CHECKED: GFI

SHEET 4 OF 5

INTENTIONALLY LEFT BLANK

SC-740 TECHNICAL SPECIFICATION

NTS

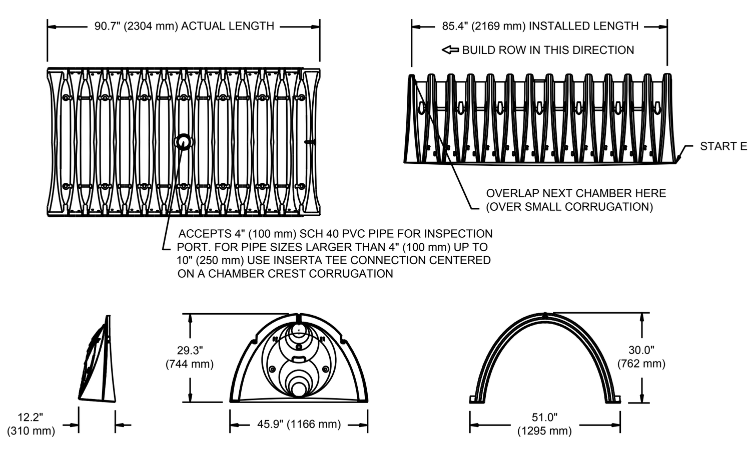

NOMINAL CHAMBER SPECIFICATIONS

SIZE (W X H X INSTALLED LENGTH)	51.0" X 30.0" X 85.4"	(1295 mm X 762 mm X 2169 mm)
CHAMBER STORAGE	45.9 CUBIC FEET	(1.30 m³)
MINIMUM INSTALLED STORAGE*	74.9 CUBIC FEET	(2.12 m³)
WEIGHT	75.0 lbs.	(33.6 kg)

*ASSUMES 6" (152 mm) STONE ABOVE, BELOW, AND BETWEEN CHAMBERS

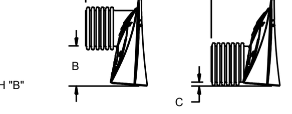

PRE-FAB STUBS AT BOTTOM OF END CAP FOR PART NUMBERS ENDING WITH "B"
PRE-FAB STUBS AT TOP OF END CAP FOR PART NUMBERS ENDING WITH "T"
PRE-CORED END CAPS END WITH "PC"

PART #	STUB	A	B	C
SC740EPE06T / SC740EPE06TPC	6" (150 mm)	10.9" (277 mm)	18.5" (470 mm)	---
SC740EPE06B / SC740EPE06BPC			---	0.5" (13 mm)
SC740EPE08T /SC740EPE08TPC	8" (200 mm)	12.2" (310 mm)	16.5" (419 mm)	---
SC740EPE08B / SC740EPE08BPC			---	0.6" (15 mm)
SC740EPE10T / SC740EPE10TPC	10" (250 mm)	13.4" (340 mm)	14.5" (368 mm)	---
SC740EPE10B / SC740EPE10BPC			---	0.7" (18 mm)
SC740EPE12T / SC740EPE12TPC	12" (300 mm)	14.7" (373 mm)	12.5" (318 mm)	---
SC740EPE12B / SC740EPE12BPC			---	1.2" (30 mm)
SC740EPE15T / SC740EPE15TPC	15" (375 mm)	18.4" (467 mm)	9.0" (229 mm)	---
SC740EPE15B / SC740EPE15BPC			---	1.3" (33 mm)
SC740EPE18T / SC740EPE18TPC	18" (450 mm)	19.7" (500 mm)	5.0" (127 mm)	---
SC740EPE18B / SC740EPE18BPC			---	1.6" (41 mm)
SC740EPE24B*	24" (600 mm)	18.5" (470 mm)	---	0.1" (3 mm)

ALL STUBS, EXCEPT FOR THE SC740EPE24B ARE PLACED AT BOTTOM OF END CAP SUCH THAT THE OUTSIDE DIAMETER OF THE STUB IS FLUSH WITH THE BOTTOM OF THE END CAP. FOR ADDITIONAL INFORMATION CONTACT STORMTECH AT 1-888-892-2694.

* FOR THE SC740EPE24B THE 24" (600 mm) STUB LIES BELOW THE BOTTOM OF THE END CAP APPROXIMATELY 1.75" (44 mm). BACKFILL MATERIAL SHOULD BE REMOVED FROM BELOW THE N-12 STUB SO THAT THE FITTING SITS LEVEL.

NOTE: ALL DIMENSIONS ARE NOMINAL

THE MARKETPLACE AT NESHAMINY, BENSALEM, PENNSYLVANIA | DATE: 6-1-16 | DRAWN: CTS | PROJECT #: 148295 | CHECKED: GFI

SHEET 5 OF 5

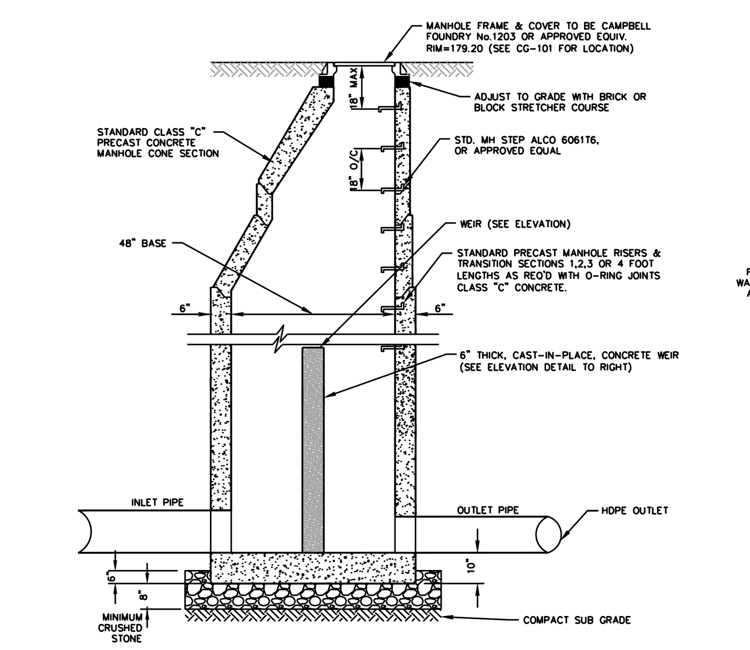

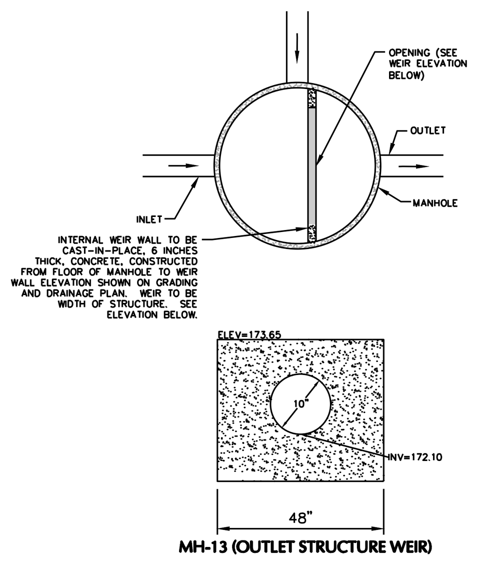

MH-13 (OUTLET STRUCTURE WEIR)

NOTES:
1. DIAMETER OF MANHOLE SHALL BE REVIEWED BY THE CONTRACTOR TO DETERMINE A LEGEND OF STANDARD MANHOLE DIMENSIONS WITH RESPECT TO PROPOSED PIPE SIZES, NUMBER AND GEOMETRY. OVER SIZE MANHOLES SHALL BE PROVIDED IF MINIMUM 6" WALL DIMENSION BETWEEN PIPES IS NOT MANUFACTURED.
2. MANHOLES SHALL BE STANDARD PRECAST CONCRETE UNITS AND SHALL BE DESIGNED AND CONSTRUCTED BY THE MANUFACTURER TO SUPPORT TRUCK HS20 LOADING.

SUBSURFACE INFILTRATION BASIN B OUTLET CONTROL STRUCTURE (MH-13)

NOTES:

1. BEDDING, HAUNCH, INITIAL BACKFILL AND COVER SHALL BE CLASS 1 MATERIAL. CLASS 1 MATERIAL MUST BE EVENLY SPREAD INTO THE HAUNCH AND BETWEEN CORRUGATIONS. IF CLASS 1A MATERIAL IS USED, THE CLASS 1A MATERIAL SHOULD BE SPREAD IN 6-INCH-THICK LIFTS AND NOMINALLY COMPACTED USING A HAND-OPERATED COMPACTION EQUIPMENT. IF CLASS 1B MATERIAL IS USED, THE CLASS 1B MATERIAL SHOULD BE SPREAD IN 6-INCH-THICK LIFTS AND COMPACTED TO AT LEAST 95% OF THE MATERIALS MAX DRY DENSITY.
2. FINAL BACKFILL MATERIAL SHALL BE EITHER CLASS I (A OR B) OR CLASS II MATERIAL. THESE MATERIALS CAN EITHER BE IMPORTED OR PROCESSED FROM ONSITE MATERIAL GENERATED DURING ROCK EXCAVATION.
3. FINAL BACKFILL SHALL BE COMPACTED TO AT LEAST 95% OF THE MATERIAL'S MAXIMUM DRY DENSITY AS DETERMINED BY A MODIFIED PROCTOR COMPACTION TEST (ASTM D1557).
4. THE SEPARATOR FABRIC IS REQUIRED UNLESS OTHERWISE DIRECTED BY THE GEOTECHNICAL ENGINEER. THE NEED FOR A SEPARATOR FABRIC TO PREVENT SOIL PARTICLE MIGRATION SHALL BE DETERMINED BY THE GEOTECHNICAL ENGINEER ONCE GRADATION DATA IS PROVIDED FOR ALL PROPOSED BACKFILL MATERIALS.

GENERAL NOTES:

1. MATERIALS: UNLESS OTHERWISE SPECIFIED ON THE PLANS OR HEREIN, CORRUGATED POLYETHYLENE PIPE SHALL CONFORM TO AASHTO M-294, LATEST EDITION, STANDARD SPECIFICATION FOR CORRUGATED POLYETHYLENE PIPE.
2. RESINS: CORRUGATED POLYETHYLENE PIPE SHALL BE MANUFACTURED FROM HIGH DENSITY POLYETHYLENE VIRGIN COMPOUNDS, AND SHALL CONFORM TO THE REQUIREMENTS OF ASTM D-3350 FOR THE CELL CLASSIFICATION 335400C.
3. COUPLING BANDS: EXCEPT AS OTHERWISE REQUIRED HEREIN, COUPLING BANDS AND OTHER HARDWARE FOR CORRUGATED POLYETHYLENE PIPE SHALL DEMONSTRATE THAT THEY MEET THE SOIL TIGHTNESS REQUIREMENTS OF AASHTO SECTION 26 "STANDARD SPECIFICATIONS FOR HIGHWAY BRIDGES."

   COUPLING BANDS SHALL LAP EQUALLY ON EACH OF THE PIPES BEING CONNECTED TO FORM A TIGHTLY CLOSED JOINT AFTER INSTALLATION.

   THE CORRUGATIONS IN THE BAND SHALL INDEX THE CORRUGATIONS IN THE PIPE ENDS TO ENGAGE AT LEAST TWO FULL CORRUGATIONS FROM THE END OF EACH PIPE.

   WHEN INFILTRATION OR EXFILTRATION IS A CONCERN, THE COUPLING BANDS MAY BE REQUIRED TO HAVE GASKETS. THE GASKET MATERIAL SHALL BE CLOSED-CELL EXPANDED RUBBER OR NEOPRENE.

   OTHER COUPLINGS MAY BE BELL & SPIGOT AND CONFORM TO THE REQUIREMENTS OF AASHTO M294.
4. DESIGNATION OF TYPE: THE PIPE MAY BE ONE OR BOTH OF THE FOLLOWING TYPE:

   TYPE S: THIS PIPE WILL HAVE A FULL CIRCULAR CROSS- SECTION, WITH AN OUTER CORRUGATED PIPE WALL AND A SMOOTH INNER LINER.

   TYPE D: THIS PIPE SHALL CONSIST OF AN ESSENTIALLY SMOOTH WATERWAY BRACED CIRCUMFERENTIALLY WITH CIRCULAR RIBS WHICH ARE FORMED SIMULTANEOUSLY WITH A SMOOTH OUTER WALL.
5. INSTALLATION: CORRUGATED POLYETHYLENE PIPE SHALL BE INSTALLED IN ACCORDANCE WITH TABLE 1 AND ASTM D-2321, LATEST EDITION, "STANDARD PRACTICE FOR UNDERGROUND INSTALLATION OF THERMOPLASTIC PIPE FOR SEWERS AND OTHER GRAVITY FLOW APPLICATIONS."

HIGH DENSITY CORRUGATED POLYETHYLENE PIPE HEIGHT OF COVER H-20 AND E-80 LIVE LOADS

NOMINAL DIAMETER IN. (MM)	MINIMUM COVER IN. & (MM) H-20	E-80
12 (300)	12 (300)	24 (600)
15 (375)	12 (300)	24 (600)
18 (450)	12 (300)	24 (600)
24 (600)	12 (300)	24 (600)
30 (750)	12 (300)	24 (600)
36 (900)	12 (300)	24 (600)
42 (1050)	12 (300)	24 (600)
48 (1200)	12 (300)	24 (600)
60 (1500)	24 (600)	24 (600)

RECOMMENDED MINIMUM TRENCH WIDTH

DIAMETER	O.D.	TRENCH WIDTH
12"	14.45"	31"
15"	17.65"	34"
18"	21.10"	39"
24"	28.30"	48"
30"	36.10"	66"
36"	42.25"	78"
42"	47.00"	83"
48"	53.00"	89"
60"	66.30"	102"

The trench width must be wide enough to accomodate compaction equipment.

MAXIMUM COVER FOR ADS AND MEGAGREEN PIPES (PER ASTM F2648), FT(MM)

DIAMETER OF PIPE IN. (MM)	CLASS 1 COMPACTED FT. (M)	CLASS 2 95% FT. (M)	CLASS 2 90% FT. (M)	CLASS 3 95% FT. (M)
12 (300)	27 (8.2)	21 (6.4)	14 (4.3)	12 (3.6)
15 (375)	27 (8.2)	21 (6.4)	14 (4.3)	13 (3.9)
18 (450)	25 (7.6)	18 (5.5)	13 (3.9)	11 (3.3)
24 (600)	22 (6.7)	16 (4.8)	11 (3.3)	12 (3.6)
30 (750)	16 (4.8)	12 (3.6)	8 (2.4)	6 (1.8)
36 (900)	21 (6.4)	15 (4.5)	10 (3.0)	10 (3.0)
42 (1050)	17 (5.2)	13 (3.9)	9 (2.7)	7 (2.1)
48 (1200)	18 (5.5)	13 (3.9)	9 (2.7)	10 (3.0)
60 (1500)	20 (6.0)	15 (4.5)	10 (3.0)	10 (3.0)

CLASSES OF EMBEDMENT AND BACKFILL MATERIALS

CLASS	TYPE	SOIL GROUP SYMBOL D 2487	DESCRIPTION	PERCENTAGE PASSING SIEVE SIZES 1 1/2 IN. (40 MM)	NO. 4 (4.75 MM)	NO. 200 (0.075 MM)
IA	MANUFACTURED AGGREGATES OPEN-GRADED, CLEAN.	NONE	ANGULAR, CRUSHED STONE OR ROCK, CRUSHED GRAVEL, BROKEN CORAL, CRUSHED SLAG, CINDERS OR SHELLS: LARGE VOID CONTENT, CONTAIN LITTLE OR NO FINES.	100 %	≤ 10 %	<5 %
IB	MANUFACTURED, PROCESSED AGGREGATES; DENSE-GRADED, CLEAN	NONE	ANGULAR, CRUSHED STONE (OR OTHER CLASS IA MATERIALS) AND STONE/SAND MIXTURES WITH GRADATIONS SELECTED TO MINIMIZE MIGRATION OF ADJACENT SOILS; CONTAIN LITTLE OR NO FINES (SEE X1.8.).	100 %	≤ 50 %	<5 %
II	COARSE-GRAINED SOILS, CLEAN	GW	WELL-GRADED GRAVELS AND GRAVEL-SAND MIXTURES; LITTLE OR NO FINES.	100 %	< 50 % "COARSE FRACTION"	<5 %
		GP	POORLY-GRADED GRAVELS AND GRAVEL-SAND MIXTURES; LITTLE OR NO FINES.			
		SW	WELL-GRADED SANDS AND GRAVELY SANDS; LITTLE OR NO FINES.		> 50 % OF "COARSE FRACTION"	
		SP	POORLY-GRADED SANDS AND GRAVEL SANDS; LITTLE OR NO FINES.			
	COARSE-GRAINED SOILS, BORDERLINE CLEAN TO W/ FINES	E.G. GW-GC SP-SM.	SANDS AND GRAVELS WHICH ARE BORDERLINE BETWEEN CLEAN AND WITH FINES.	100 %	VARIES	5 % TO 12 %
III	COARSE-GRAINED SOILS, WITH FINES	GM	SILTY GRAVELS, GRAVEL-SAND SILT MIXTURES.	100 %	< 50 % OF "COARSE FRACTION"	12 % TO 50 %
		GC	CLAYEY GRAVELS, GRAVEL-SAND-CLAY MIXTURES.			
		SM	SILTY SANDS, SAND-SILT MIXTURES.		> 50 % OF "COARSE FRACTION"	
		SC	CLAYEY SANDS, SAND-CLAY MIXTURES.			

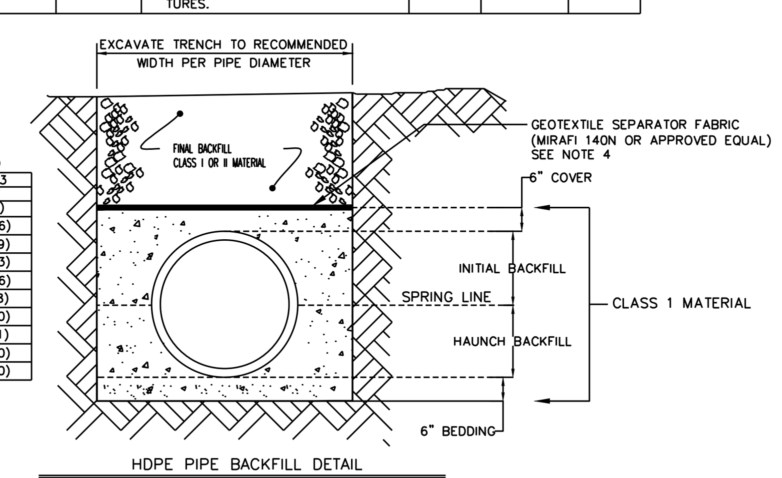

HDPE PIPE BACKFILL DETAIL

NON-PERFORATED HDPE PIPE INSTALLATION DETAIL

SEE CG-101 THROUGH CG-102 FOR ORIFICE SIZE, SHAPE AND ELEVATIONS. (TYP.)

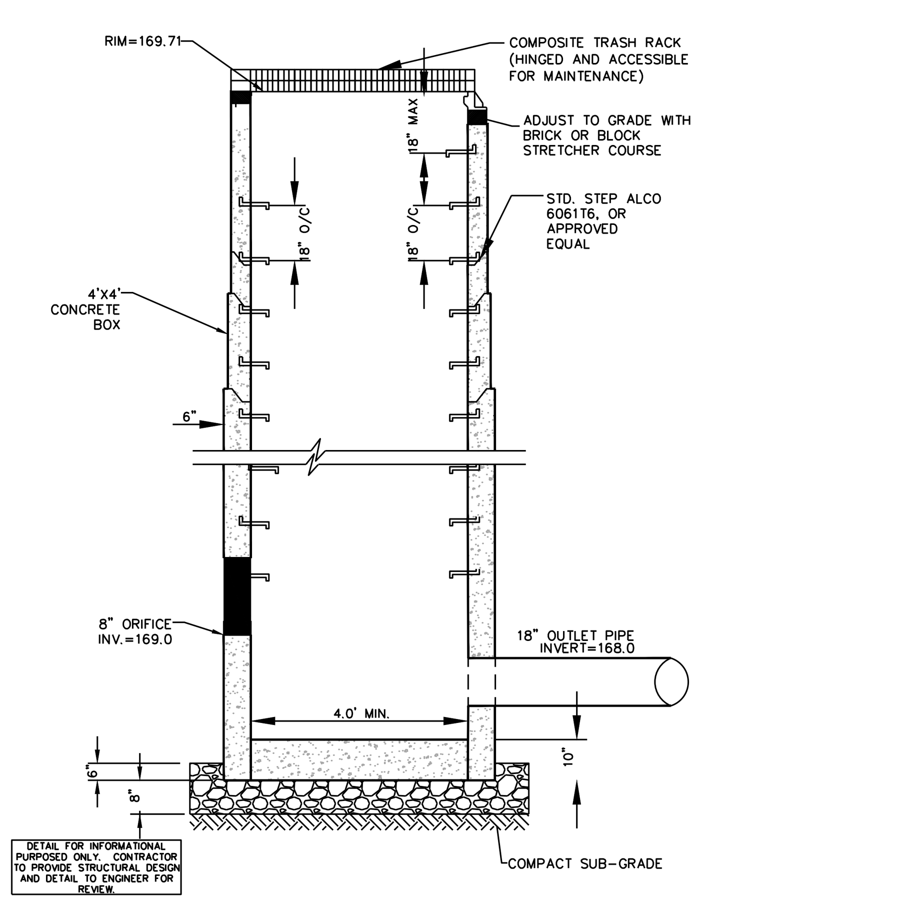

SURFACE INFILTRATION BASIN A OUTLET CONTROL STRUCTURE 1

Date	Description	No.
8/8/2016	REVISIONS PER TOWNSHIP AND COUNTY COMMENTS	1.

REVISIONS

BRIAN M. CONLON — DATE
PROFESSIONAL ENGINEER
PA Lic. No. PE061782

LANGAN
30 South 17th Street, Suite 1300, Philadelphia, PA 19103
T: 215.864.0640 F: 215.864.0671 www.langan.com
NEW JERSEY NEW YORK CONNECTICUT PENNSYLVANIA OHIO VIRGINIA WASHINGTON DC FLORIDA NORTH DAKOTA CALIFORNIA
ABU DHABI ATHENS DOHA DUBAI ISTANBUL
Langan Engineering, Environmental, Surveying and Landscape Architecture, D.P.C.
Langan Engineering and Environmental Services, Inc.
Langan CT, Inc.
Langan International LLC
Collectively known as Langan

Project
THE MARKETPLACE AT NESHAMINY
BENSALEM TOWNSHIP
BUCKS COUNTY — PENNSYLVANIA

Drawing Title
POST CONSTRUCTION STORMWATER MANAGEMENT DETAILS II

Project No. 220048102	Drawing No. CG-502
Date 24 JUNE 2016	
Scale N.T.S.	
Drawn By TFH	
Checked By BMC	SHEET 18 OF 29

© 2014 Langan

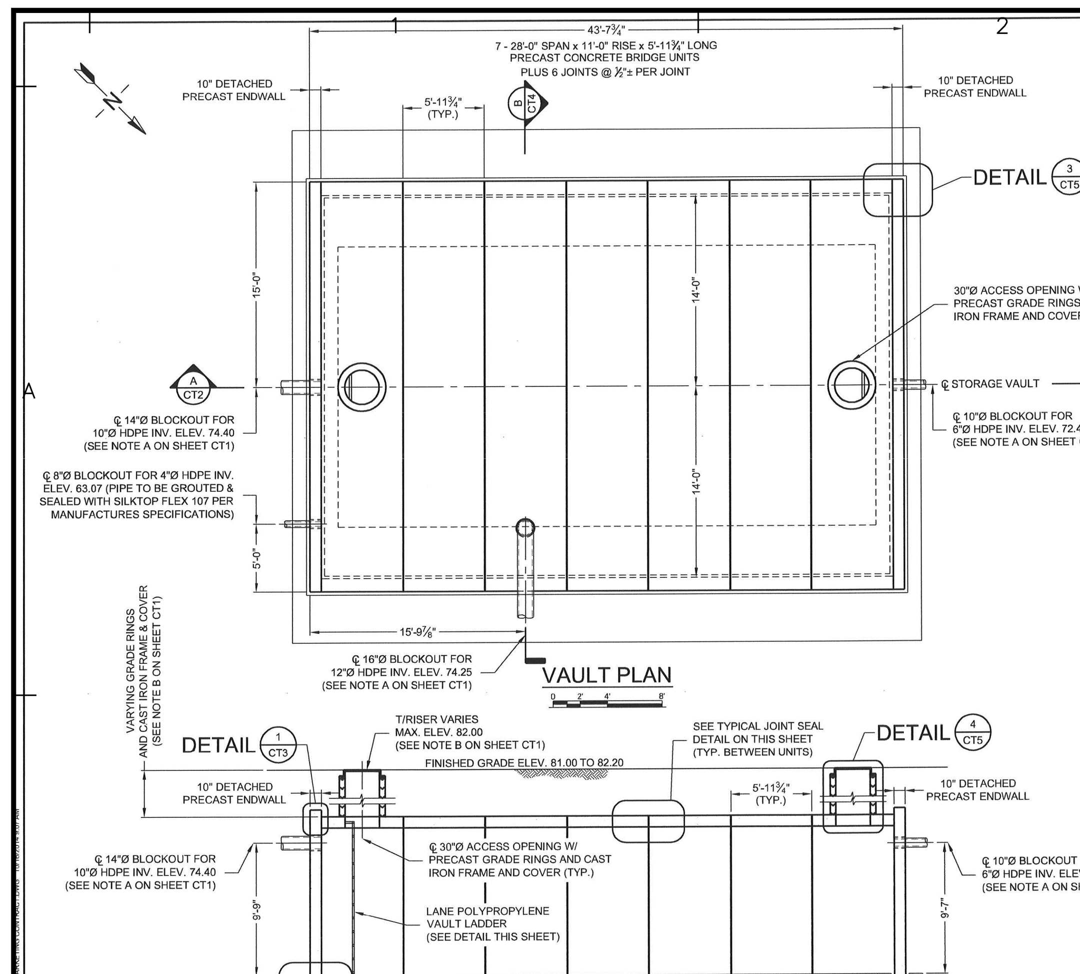

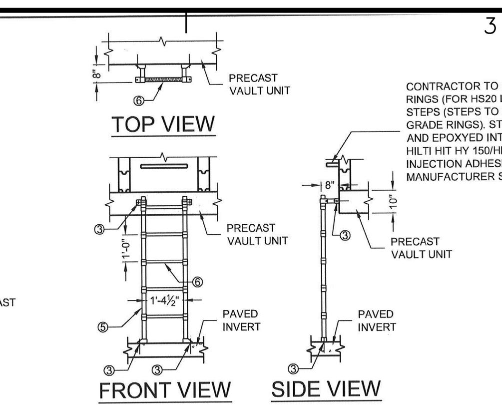

LANE POLYPROPYLENE VAULT LADDER

LADDER NOTES:
1. LADDERS AVAILABLE IN 2 RUNG THROUGH 25 RUNG.
2. POLYPROPYLENE CONFORMS TO ASTM D-4101. LADDERS MEET ALL ALL ASTMC-497 LOAD REQUIREMENTS AND OSHA 1910.26 AND 1910.27 SPECIFICATIONS.
3. FASTEN LADDER TO FLOOR AND WALL WITH ½" x 3¾" ANCHORS. ANCHORS TO BE INSTALLED PER MANUFACTURERS INSTRUCTIONS.
4. STANDARD ADJUSTABLE MOUNTING BRACKET - 8" O.D.
5. ALUMINUM REINFORCED COPOLYMER POLYPROPYLENE RAIL 1 ¾" x 1¾"Ø
6. STEEL REINFORCED COPOLYMER POLYPROPYLENE RUNG 1 ⅝" x 1¼"Ø WITH MOLDED FINGER GRIPS, 12" C.C.
7. LADDER MANUFACTURED BY LANE INTERNATIONAL CORPORATION P.O. BOX 925, TUALATIN, OREGON 800-666-0076

The design and information shown on this drawing is provided as a service to the project owner, engineer and contractor by Contech Engineered Solutions LLC ("Contech"). Neither this drawing, nor any part thereof, may be used, reproduced or modified in any manner without the prior written consent of Contech. Failure to comply is done at the user's own risk and Contech expressly disclaims any liability or responsibility for such use.
If discrepancies between the supplied information upon which the drawing is based and actual field conditions are encountered as site work progresses, these discrepancies must be reported to Contech immediately for re-evaluation of the design. Contech accepts no liability for designs based on missing, incomplete or inaccurate information supplied by others.

MARK	DATE	REVISION DESCRIPTION	BY

CONTECH® ENGINEERED SOLUTIONS LLC
www.ContechES.com
9025 Centre Pointe Dr., Suite 400, West Chester, OH 45069
800-338-1122 513-645-7000 513-645-7993 FAX
CON/STORM™ CONCRETE DETENTION SYSTEMS
PROPOSAL DRAWING

28'-0"SPANx11'-0"RISE CON/SPAN DETENTION SYSTEM-000000-001
SAMPLE PROJECT
ANYTOWN, USA
SITE DESIGNATION: URS

PROJECT No.: SEQ. No.: DATE: 10/16/2014
DESIGNED: DRAWN: JCH
CHECKED: APPROVED:
SHEET NO.: CT2 OF CT7

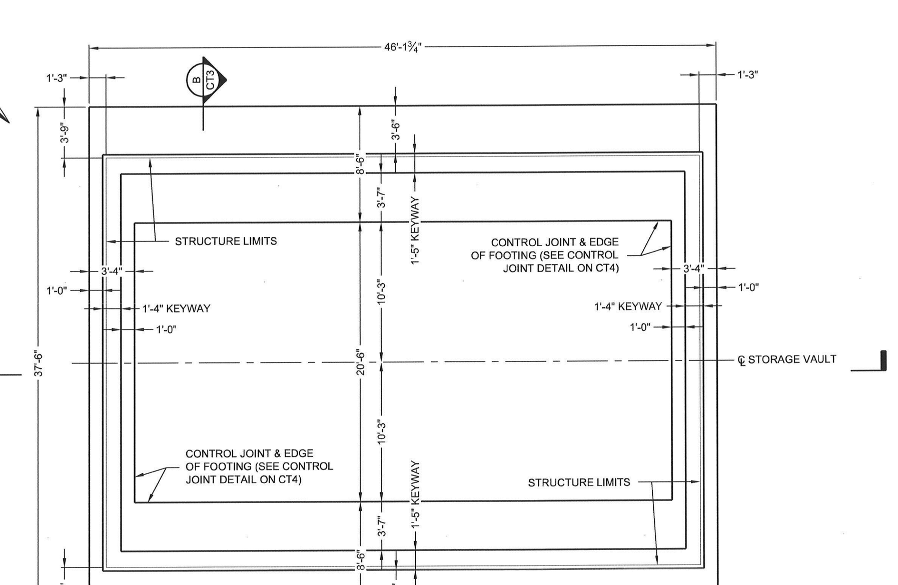

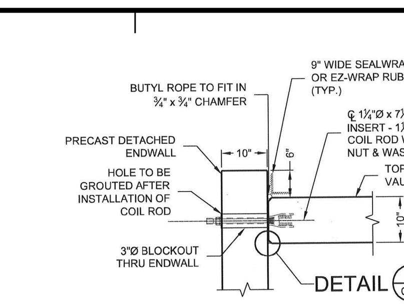

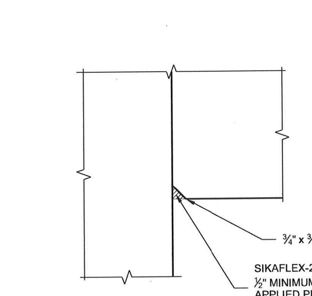

28'-0"SPANx11'-0"RISE CON/SPAN DETENTION SYSTEM-000000-001
SAMPLE PROJECT
ANYTOWN, USA
SITE DESIGNATION: URS
SHEET NO.: CT3 OF CT7

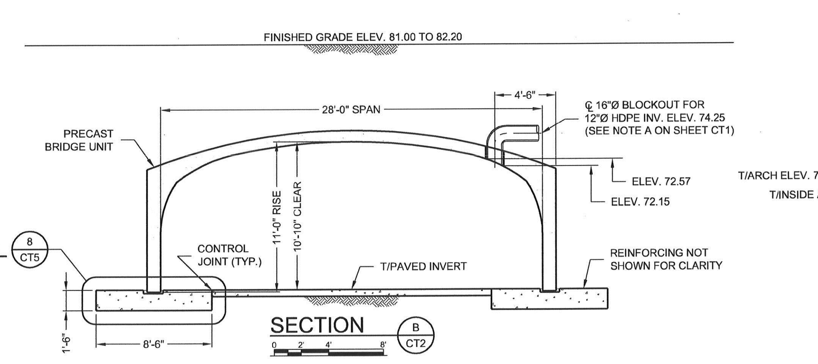

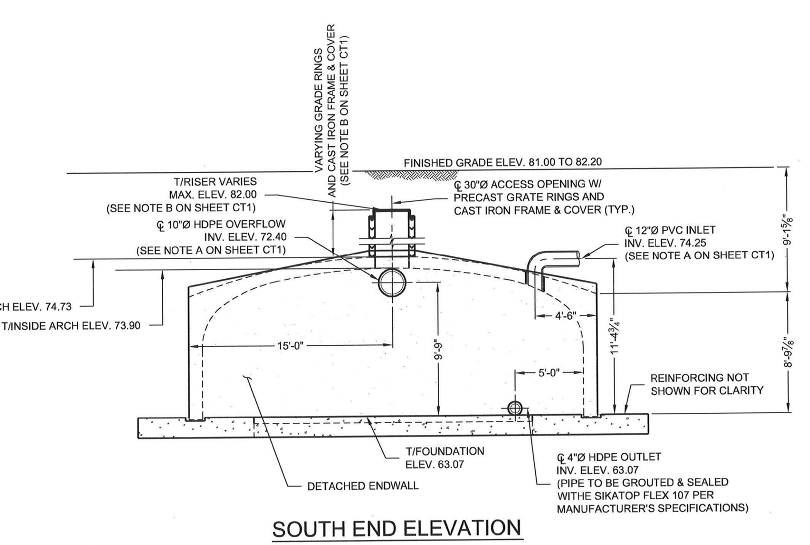

28'-0"SPANx11'-0"RISE CON/SPAN DETENTION SYSTEM-000000-001
SAMPLE PROJECT
ANYTOWN, USA
SITE DESIGNATION: URS
SHEET NO.: CT4 OF CT7

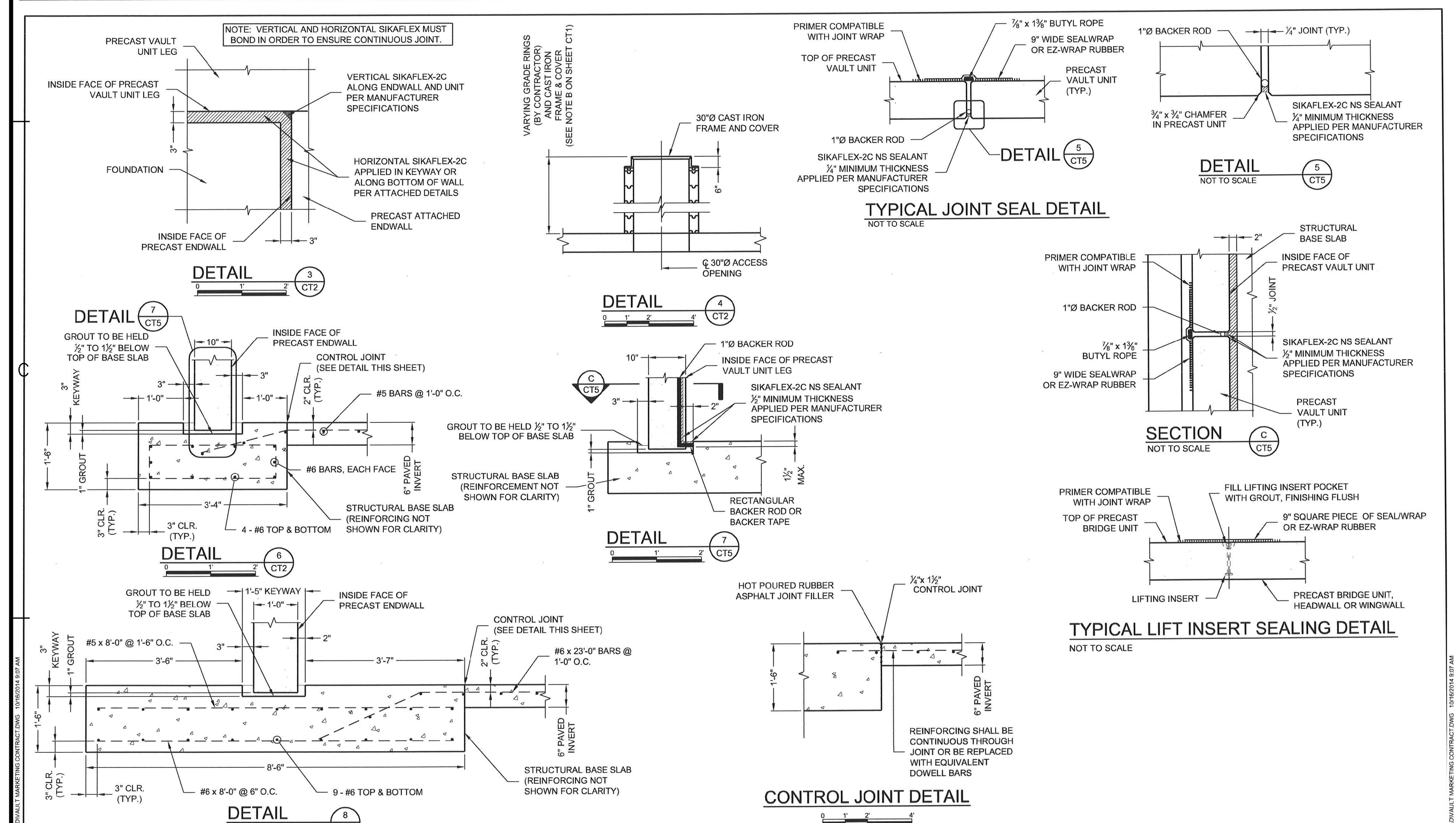

28'-0"SPANx11'-0"RISE CON/SPAN DETENTION SYSTEM-000000-001
SAMPLE PROJECT
ANYTOWN, USA
SITE DESIGNATION: URS
SHEET NO.: CT5 OF CT7

SPECIFICATIONS FOR MANUFACTURE AND INSTALLATION OF CON/SPAN® STORMWATER SYSTEMS

1. DESCRIPTION
THIS WORK SHALL CONSIST OF CONSTRUCTING A CON/SPAN® VAULT IN ACCORDANCE WITH THESE SPECIFICATIONS AND IN REASONABLY CLOSE CONFORMITY WITH THE LINES, GRADES, DESIGN AND DIMENSIONS SHOWN ON THE PLANS OR AS ESTABLISHED BY THE ENGINEER. IN SITUATIONS WHERE TWO OR MORE SPECIFICATIONS APPLY TO THIS WORK, THE MOST STRINGENT REQUIREMENTS SHALL GOVERN.

2. TYPES
PRECAST REINFORCED CONCRETE CON/SPAN® VAULT UNITS MANUFACTURED IN ACCORDANCE WITH THIS SPECIFICATION SHALL BE DESIGNATED BY SPAN AND RISE. PRECAST REINFORCED CONCRETE CON/SPAN® ENDWALLS MANUFACTURED IN ACCORDANCE WITH THIS SPECIFICATION SHALL BE DESIGNATED BY LENGTH AND HEIGHT.

3. MATERIALS - CONCRETE
THE CONCRETE FOR THE STRUCTURES SHALL BE AIR-ENTRAINED WHEN INSTALLED IN AREAS SUBJECT TO FREEZE-THAW CONDITIONS, COMPOSED OF PORTLAND CEMENT, FINE AND COARSE AGGREGATES, ADMIXTURES AND WATER. AIR-ENTRAINED CONCRETE SHALL CONTAIN 6%± 2% AIR. THE AIR ENTRAINING ADMIXTURE SHALL CONFORM TO AASHTO M154.
3.1. PORTLAND CEMENT - SHALL CONFORM TO THE REQUIREMENTS OF ASTM SPECIFICATIONS C150-TYPE I, TYPE II, OR TYPE III CEMENT.
3.2. COARSE AGGREGATE - SHALL CONSIST OF STONE HAVING A MAXIMUM SIZE OF 1". AGGREGATE SHALL MEET REQUIREMENTS FOR ASTM C33.
3.3. WATER REDUCING ADMIXTURE - THE MANUFACTURER MAY SUBMIT FOR APPROVAL BY THE ENGINEER, A WATER-REDUCING ADMIXTURE FOR THE PURPOSE OF INCREASING WORKABILITY AND REDUCING THE WATER REQUIREMENT FOR THE CONCRETE.
3.4. CALCIUM CHLORIDE - THE ADDITION TO THE MIX OF CALCIUM CHLORIDE OR ADMIXTURES CONTAINING CALCIUM CHLORIDE WILL NOT BE PERMITTED.

4. MATERIALS - STEEL REINFORCEMENT AND HARDWARE
ALL REINFORCING STEEL FOR THE STRUCTURES SHALL BE FABRICATED AND PLACED IN ACCORDANCE WITH THE DETAILED SHOP DRAWINGS SUBMITTED BY THE MANUFACTURER.
4.1. STEEL REINFORCEMENT - REINFORCEMENT SHALL CONSIST OF WELDED WIRE FABRIC CONFORMING TO ASTM SPECIFICATION A185 OR A497, OR DEFORMED BILLET STEEL BARS CONFORMING TO ASTM SPECIFICATION A615, GRADE 60. LONGITUDINAL DISTRIBUTION REINFORCEMENT MAY CONSISTS OF WELDED WIRE FABRIC OR DEFORMED BILLET-STEEL BARS.
4.2. HARDWARE - INSERTS FOR ENDWALL CONNECTIONS SHALL BE AISI TYPE 304 STAINLESS STEEL, F-58 EXPANDED COIL INSERTS AS MANUFACTURED BY DAYTON/RICHMOND CONCRETE ACCESSORIES, MIAMISBURG, OHIO, (800)745-3700. COIL RODS AND NUTS USED IN ENDWALL CONNECTIONS SHALL BE AISI TYPE 304 STAINLESS STEEL. WASHERS USED IN ENDWALL CONNECTIONS SHALL BE AISI TYPE 304 STAINLESS STEEL PLATE WASHERS.

REINFORCING BAR SPLICES SHALL BE MADE USING THE DOWEL BAR SPLICER SYSTEM AS MANUFACTURED BY DAYTON/RICHMOND CONCRETE ACCESSORIES, MIAMISBURG, OHIO, (800)745-3700, AND SHALL CONSIST OF THE DOWEL BAR SPLICER (DB-SAE) AND DOWEL-IN (DI).

FERRULE LOOP INSERTS SHALL BE F-64 FERRULE LOOP INSERTS AS MANUFACTURED BY DAYTON/RICHMOND CONCRETE ACCESSORIES, MIAMISBURG, OHIO, (800)745-3700.

HOOK BOLTS USED IN ENDWALL CONNECTIONS SHALL BE ASTM A 307.

5. MANUFACTURE
5.1. MIXTURE - THE AGGREGATES, CEMENT AND WATER SHALL BE PROPORTIONED AND MIXED IN A BATCH MIXER TO PRODUCE A HOMOGENEOUS CONCRETE MEETING THE STRENGTH REQUIREMENTS OF THIS SPECIFICATION. THE PROPORTION OF PORTLAND CEMENT IN THE MIXTURE SHALL NOT BE LESS THAN 564 POUNDS (6 SACKS) PER CUBIC YARD OF CONCRETE.
5.2. CURING - THE PRECAST CONCRETE VAULT UNITS SHALL BE CURED FOR A SUFFICIENT LENGTH OF TIME SO THAT THE CONCRETE WILL DEVELOP THE SPECIFIED COMPRESSIVE STRENGTH IN 28 DAYS OR LESS. ANY ONE OF THE FOLLOWING METHODS OF CURING OR COMBINATIONS THERE OF SHALL BE USED:
5.2.1. STEAM CURING - THE UNITS MAY BE LOW PRESSURE, STEAM CURED BY A SYSTEM THAT WILL MAINTAIN A MOIST ATMOSPHERE.
5.2.2. WATER CURING - THE UNITS MAY BE WATER CURED BY ANY METHOD THAT WILL KEEP THE SECTIONS MOIST.
5.2.3. MEMBRANE CURING - A SEALING MEMBRANE CONFORMING TO THE REQUIREMENTS OF ASTM SPECIFICATION C 309 MAY BE APPLIED AND SHALL BE LEFT INTACT UNTIL THE REQUIRED CONCRETE COMPRESSIVE STRENGTH IS ATTAINED. THE CONCRETE TEMPERATURE AT THE TIME OF APPLICATION SHALL BE WITHIN ± 10% F OF THE ATMOSPHERIC TEMPERATURE. ALL SURFACES SHALL BE KEPT MOIST PRIOR TO THE APPLICATION OF THE COMPOUNDS AND SHALL BE DAMP WHEN THE COMPOUND IS APPLIED.
5.3. FORMS - THE FORMS USED IN MANUFACTURE SHALL BE SUFFICIENTLY RIGID AND ACCURATE TO MAINTAIN THE STRUCTURE DIMENSIONS WITHIN THE PERMISSIBLE VARIATIONS GIVEN IN SECTION 7 OF THESE SPECIFICATIONS. ALL CASTING SURFACES SHALL BE OF A SMOOTH MATERIAL.
5.4. HANDLING - HANDLING DEVICES OR HOLES SHALL BE PERMITTED IN EACH VAULT UNIT FOR THE PURPOSE OF HANDLING AND SETTING.
5.5. STORAGE - THE PRECAST ELEMENTS SHALL BE STORED IN SUCH A MANNER TO PREVENT CRACKING OR DAMAGE. THE UNITS SHALL NOT BE MOVED UNTIL THE CONCRETE COMPRESSIVE STRENGTH HAS REACHED A MINIMUM OF 2500 PSI, AND THEY SHALL NOT BE STORED IN AN UPRIGHT POSITION UNTIL THE CONCRETE COMPRESSIVE STRENGTH IS A MINIMUM OF 4,000 PSI.

6. DESIGN
6.1. THE PRECAST ELEMENT DIMENSION AND REINFORCEMENT DETAILS SHALL BE AS PRESCRIBED IN THE PLAN AND THE FABRICATION DRAWINGS PROVIDED BY THE MANUFACTURER, SUBJECT TO THE PROVISIONS OF SECTION 7, BELOW. THE MINIMUM CONCRETE COMPRESSIVE STRENGTH SHALL BE AS SHOWN ON THE FABRICATION DRAWINGS. THE MINIMUM STEEL YIELD STRENGTH SHALL BE 60,000 PSI, UNLESS OTHERWISE NOTED ON THE SHOP DRAWINGS.
6.2. THE PRECAST ELEMENTS ARE DESIGNED IN ACCORDANCE WITH THE "STANDARD SPECIFICATIONS FOR HIGHWAY BRIDGES" 17TH EDITION, ADOPTED BY THE AMERICAN ASSOCIATION OF STATE HIGHWAY AND TRANSPORTATION OFFICIALS, 2002. A MINIMUM OF 1'-0" OF COVER ABOVE THE CROWN OF THE VAULT UNITS IS REQUIRED IN THE INSTALLED CONDITION. (UNLESS NOTED OTHERWISE ON THE FABRICATION DRAWINGS AND DESIGNED ACCORDINGLY.)
6.3. PLACEMENT OF REINFORCEMENT IN PRECAST VAULT UNITS - THE COVER OF CONCRETE OVER THE OUTSIDE CIRCUMFERENTIAL REINFORCEMENT SHALL BE 2" MINIMUM. THE COVER OF CONCRETE OVER THE INSIDE CIRCUMFERENTIAL REINFORCEMENT SHALL BE 1½" MINIMUM, UNLESS OTHERWISE NOTED ON THE FABRICATION DRAWINGS. THE CLEAR DISTANCE OF THE END CIRCUMFERENTIAL WIRES SHALL NOT BE LESS THAN 1" NOR MORE THAN 2" FROM THE ENDS OF EACH SECTION. REINFORCEMENT SHALL BE ASSEMBLED UTILIZING SINGLE OR MULTIPLE LAYERS OF WELDED WIRE FABRIC (NOT TO EXCEED 3 LAYERS), SUPPLEMENTED WITH A SINGLE LAYER OF DEFORMED BILLET-STEEL BARS, WHEN NECESSARY. WELDED WIRE FABRIC SHALL BE COMPOSED OF CIRCUMFERENTIAL AND LONGITUDINAL WIRES MEETING THE SPACING REQUIREMENTS OF 6.6 BELOW, AND SHALL CONTAIN SUFFICIENT LONGITUDINAL WIRES EXTENDING THROUGH THE VAULT UNIT TO MAINTAIN THE SHAPE AND POSITION OF THE REINFORCEMENT. LONGITUDINAL DISTRIBUTION REINFORCEMENT MAY BE WELDED WIRE FABRIC OR DEFORMED BILLET-STEEL BARS AND SHALL MEET THE SPACING REQUIREMENTS OF 6.6 BELOW. THE ENDS OF THE LONGITUDINAL DISTRIBUTION REINFORCEMENT SHALL BE NOT MORE THAN 3" AND NOT LESS THAN 1½" FROM THE ENDS OF THE VAULT UNIT.
6.4. PLACEMENT OF REINFORCEMENT FOR PRECAST ENDWALLS - THE COVER OF CONCRETE OVER THE LONGITUDINAL AND TRANSVERSE REINFORCEMENT SHALL BE 2" MINIMUM. THE CLEAR DISTANCE FROM THE END OF EACH PRECAST ELEMENT TO THE END TRANSVERSE REINFORCING STEEL SHALL NOT BE LESS THAN 1" NOR MORE THAN 2". REINFORCEMENT SHALL BE ASSEMBLED UTILIZING A SINGLE LAYER OF WELDED WIRE FABRIC, OR A SINGLE LAYER OF DEFORMED BILLET-STEEL BARS. WELDED WIRE FABRIC SHALL BE COMPOSED OF TRANSVERSE AND LONGITUDINAL WIRES MEETING THE SPACING REQUIREMENTS OF 6.7 BELOW, AND SHALL CONTAIN SUFFICIENT LONGITUDINAL WIRES EXTENDING THROUGH THE ELEMENT TO MAINTAIN THE SHAPE AND POSITION OF THE REINFORCEMENT. LONGITUDINAL REINFORCEMENT MAY BE WELDED WIRE FABRIC OR DEFORMED BILLET-STEEL BARS AND SHALL MEET THE SPACING REQUIREMENTS OF 6.7 BELOW. THE ENDS OF THE LONGITUDINAL REINFORCEMENT SHALL BE NOT MORE THAN 3" AND NOT LESS THAN 1½" FROM THE ENDS OF THE WALLS.
6.5. BENDING OF REINFORCEMENT FOR PRECAST VAULT UNITS - THE OUTSIDE AND INSIDE CIRCUMFERENTIAL REINFORCING STEEL FOR THE CORNERS OF THE VAULT SHALL BE BENT TO SUCH AN ANGLE THAT IS APPROXIMATELY EQUAL TO THE CONFIGURATION OF THE VAULT'S OUTSIDE CORNER.
6.6. LAPS, WELDS, AND SPACING FOR PRECAST VAULT UNITS - TENSION SPLICES IN THE CIRCUMFERENTIAL REINFORCEMENT SHALL BE MADE BY LAPPING. LAPS MAY BE TACK WELDED TOGETHER FOR ASSEMBLY PURPOSES. FOR SMOOTH WELDED WIRE FABRIC, THE OVERLAP SHALL MEET THE REQUIREMENTS OF AASHTO 8.30.2 AND 8.32.6. FOR DEFORMED WELDED WIRE FABRIC, THE OVERLAP SHALL MEET THE REQUIREMENTS OF AASHTO 8.30.1 AND 8.32.5. THE OVERLAP OF WELDED WIRE FABRIC SHALL BE MEASURED BETWEEN THE OUTER MOST LONGITUDINAL WIRES OF EACH FABRIC SHEET. FOR DEFORMED BILLET-STEEL BARS, THE OVERLAP SHALL MEET THE REQUIREMENTS OF AASHTO 8.25. FOR SPLICES OTHER THAN TENSION SPLICES, THE OVERLAP SHALL BE A MINIMUM OF 1'-0" FOR WELDED WIRE FABRIC OR DEFORMED BILLET-STEEL BARS. THE SPACING CENTER TO CENTER OF THE CIRCUMFERENTIAL WIRES IN A WIRE FABRIC SHEET SHALL NOT BE LESS THAN 2" NOR MORE THAN 4". THE SPACING CENTER TO CENTER OF THE LONGITUDINAL WIRES SHALL NOT BE MORE THAN 8". THE SPACING CENTER TO CENTER OF THE LONGITUDINAL DISTRIBUTION STEEL FOR EITHER LINE OF REINFORCING IN THE TOP SLAB SHALL BE NOT MORE THAN 1'-4".
6.7. LAPS, WELDS, AND SPACING FOR PRECAST ENDWALLS - SPLICES IN THE REINFORCEMENT SHALL BE MADE BY LAPPING. LAPS MAY BE TACK WELDED TOGETHER FOR ASSEMBLY PURPOSES. FOR SMOOTH WELDED WIRE FABRIC, THE OVERLAP SHALL MEET THE REQUIREMENTS OF AASHTO 8.30.2 AND 8.32.6. FOR DEFORMED WELDED WIRE FABRIC, THE OVERLAP SHALL MEET THE REQUIREMENTS OF AASHTO 8.30.1 AND 8.32.5. FOR DEFORMED BILLET-STEEL BARS, THE OVERLAP SHALL MEET THE REQUIREMENTS OF AASHTO 8.25. THE SPACING CENTER-TO-CENTER OF THE WIRES IN A WIRE FABRIC SHEET SHALL NOT BE LESS THAN 2" NOR MORE THAN 8".

7. PERMISSIBLE VARIATIONS
7.1. VAULT UNITS
7.1.1. INTERNAL DIMENSIONS - THE INTERNAL DIMENSION SHALL VARY NOT MORE THAN 1% FROM THE DESIGN DIMENSIONS NOR MORE THAN 1½" WHICHEVER IS LESS. THE HAUNCH DIMENSIONS SHALL VARY NOT MORE THAN ¾" FROM THE DESIGN DIMENSION.
7.1.2. SLAB AND WALL THICKNESS - THE SLAB AND WALL THICKNESS SHALL NOT BE LESS THAN THAT SHOWN IN THE DESIGN BY MORE THAN ¼ INCH. A THICKNESS MORE THAN THAT REQUIRED IN THE DESIGN SHALL NOT BE CAUSE FOR REJECTION.
7.1.3. LENGTH OF OPPOSITE SURFACES - VARIATIONS IN LAYING LENGTHS OF TWO OPPOSITE SURFACES OF THE VAULT UNIT SHALL NOT BE MORE THAN ½" IN ANY SECTION, EXCEPT WHERE BEVELED ENDS FOR LAYING OF CURVES ARE SPECIFIED BY THE PURCHASER.
7.1.4. LENGTH OF SECTION - THE UNDER RUN IN LENGTH OF A SECTION SHALL NOT BE MORE THAN ½" INCH IN ANY VAULT UNIT.
7.1.5. POSITION OF REINFORCEMENT - THE MAXIMUM VARIATION IN POSITION OF THE REINFORCEMENT SHALL BE ± ½". IN NO CASE SHALL THE COVER OVER THE REINFORCEMENT BE LESS THAN 1½" FOR THE OUTSIDE CIRCUMFERENTIAL STEEL OR BE LESS THAN 1" FOR THE INSIDE CIRCUMFERENTIAL STEEL AS MEASURED TO THE EXTERNAL OR INTERNAL SURFACE OF THE VAULT. THESE TOLERANCES OR COVER REQUIREMENTS DO NOT APPLY TO MATING SURFACES OF THE JOINTS.
7.1.6. AREA OF REINFORCEMENT - THE AREAS OF STEEL REINFORCEMENT SHALL BE THE DESIGN STEEL AREAS AS SHOWN IN THE MANUFACTURER'S SHOP DRAWINGS. STEEL AREAS GREATER THAN THOSE REQUIRED SHALL NOT BE CAUSE FOR REJECTION. THE PERMISSIBLE VARIATION IN DIAMETER OF ANY REINFORCEMENT SHALL CONFORM TO THE TOLERANCES PRESCRIBED IN THE ASTM SPECIFICATION FOR THAT TYPE OF REINFORCEMENT.
7.2. ENDWALLS
7.2.1. WALL THICKNESS - THE WALL THICKNESS SHALL NOT VARY FROM THAT SHOWN IN THE DESIGN BY MORE THAN ½".
7.2.2. LENGTH/ HEIGHT OF WALL SECTIONS - THE LENGTH AND HEIGHT OF THE WALL SHALL NOT VARY FROM THAT SHOWN IN THE DESIGN BY MORE THAN ½".
7.2.3. POSITION OF REINFORCEMENT - THE MAXIMUM VARIATION IN THE POSITION OF THE REINFORCEMENT SHALL BE ± ½". IN NO CASE SHALL THE COVER OVER THE REINFORCEMENT BE LESS THAN 1½".
7.2.4. SIZE OF REINFORCEMENT - THE PERMISSIBLE VARIATION IN DIAMETER OF ANY REINFORCING SHALL CONFORM TO THE TOLERANCES PRESCRIBED IN THE ASTM SPECIFICATION FOR THAT TYPE OF REINFORCING. STEEL AREA GREATER THAN THAT REQUIRED SHALL NOT BE CAUSE FOR REJECTION.

8. TESTING AND INSPECTION
8.1. TYPE OF TEST SPECIMEN - CONCRETE COMPRESSIVE STRENGTH SHALL BE DETERMINED FROM COMPRESSION TESTS MADE ON CYLINDERS OR CORES. FOR CYLINDER TESTING, A MINIMUM OF 4 CYLINDERS SHALL BE TAKEN DURING EACH PRODUCTION RUN. FOR CORE TESTING, ONE CORE SHALL BE CUT FROM EACH OF 3 PRECAST ELEMENTS SELECTED AT RANDOM FROM EACH PRODUCTION GROUP. A PRODUCTION GROUP SHALL BE DEFINED AS 15 OR FEWER VAULT UNITS (OF A PARTICULAR SIZE), OR ENDWALLS IN A CONTINUOUS PRODUCTION RUN. FOR EACH CONTINUOUS PRODUCTION RUN, EACH PRODUCTION GROUP OR FRACTION THERE OF SHALL BE CONSIDERED SEPARATELY FOR THE PURPOSE OF TESTING AND ACCEPTANCE. A PRODUCTION RUN SHALL BE CONSIDERED CONTINUOUS IF NOT INTERRUPTED FOR MORE THAN 3 CONSECUTIVE DAYS.
8.2. COMPRESSION TESTING - CYLINDERS SHALL BE MADE AND TESTED AS PRESCRIBED BY THE ASTM C39 SPECIFICATION. CORES SHALL BE OBTAINED AND TESTED FOR COMPRESSIVE STRENGTH IN ACCORDANCE WITH THE PROVISIONS OF THE ASTM C497 SPECIFICATION.
8.3. ACCEPTABILITY OF CYLINDER TESTS - WHEN THE AVERAGE COMPRESSIVE STRENGTH OF ALL CYLINDERS TESTED IS EQUAL TO OR GREATER THAN THE DESIGN COMPRESSIVE STRENGTH, AND NOT MORE THAN 10% OF THE CYLINDERS TESTED HAVE A COMPRESSIVE STRENGTH LESS THAN THE DESIGN CONCRETE STRENGTH, AND NO CYLINDER TESTED HAS A COMPRESSIVE STRENGTH LESS THAN 80% OF THE DESIGN COMPRESSIVE STRENGTH, THEN THE LOT SHALL BE ACCEPTED. WHEN THE COMPRESSIVE STRENGTH OF THE CYLINDERS TESTED DOES NOT CONFORM TO THIS ACCEPTANCE CRITERIA, THE ACCEPTABILITY OF THE LOT MAY BE DETERMINED AS DESCRIBED IN SECTION 8.4 BELOW.
8.4. ACCEPTABILITY OF CORE TESTS - THE COMPRESSIVE STRENGTH OF THE CONCRETE IN EACH PRODUCTION GROUP AS DEFINED IN 8.1 IS ACCEPTABLE WHEN THE AVERAGE CORE TEST STRENGTH IS EQUAL TO OR GREATER THAN THE DESIGN CONCRETE STRENGTH. WHEN THE COMPRESSIVE STRENGTH OF ANY CORE TESTED IS LESS THAN THE DESIGN CONCRETE STRENGTH, THE PRECAST ELEMENT FROM WHICH THAT CORE WAS TAKEN MAY BE RE-CORED. WHEN THE COMPRESSIVE STRENGTH OF THE RE-CORE IS EQUAL TO OR GREATER THAN THE DESIGN CONCRETE STRENGTH, THE COMPRESSIVE STRENGTH OF THE CONCRETE IN THAT PRODUCTION GROUP IS ACCEPTABLE.
8.4.1. WHEN THE COMPRESSIVE STRENGTH OF ANY RECORE IS LESS THAN THE DESIGN CONCRETE STRENGTH, THE PRECAST ELEMENT FROM WHICH THAT CORE WAS TAKEN SHALL BE REJECTED. TWO PRECAST ELEMENTS FROM THE REMAINDER OF THE GROUP SHALL BE SELECTED AT RANDOM AND ONE CORE SHALL BE TAKEN FROM EACH. IF THE COMPRESSIVE STRENGTH OF BOTH CORES IS EQUAL TO OR GREATER THAN THE DESIGN CONCRETE STRENGTH, THE COMPRESSIVE STRENGTH OF THE REMAINDER OF THAT GROUP IS ACCEPTABLE. IF THE COMPRESSIVE STRENGTH OF EITHER OF THE TWO CORES TESTED IS LESS THAN THE DESIGN CONCRETE STRENGTH, THE REMAINDER OF THE GROUP SHALL BE REJECTED OR, AT THE OPTION OF THE MANUFACTURER, EACH PRECAST ELEMENT OF THE REMAINDER OF THE GROUP SHALL BE CORED AND ACCEPTED INDIVIDUALLY, AND ANY OF THESE ELEMENTS THAT HAVE CORES WITH LESS THAN THE DESIGN CONCRETE STRENGTH SHALL BE REJECTED.
8.4.2. PLUGGING CORE HOLES - THE CORE HOLES SHALL BE PLUGGED AND SEALED BY THE MANUFACTURER IN A MANNER SUCH THAT THE ELEMENTS WILL MEET ALL OF THE TEST REQUIREMENTS OF THIS SPECIFICATION. PRECAST ELEMENTS SO SEALED SHALL BE CONSIDERED SATISFACTORY FOR USE.
8.4.3. TEST EQUIPMENT - EVERY MANUFACTURER FURNISHING VAULT STRUCTURES UNDER THIS SPECIFICATION SHALL FURNISH ALL FACILITIES AND PERSONNEL NECESSARY TO CARRYOUT THE TEST REQUIRED

9. JOINTS
THE VAULT UNITS SHALL BE PRODUCED WITH FLAT BUTT ENDS. THE ENDS OF THE VAULT UNITS SHALL BE SUCH THAT WHEN THE SECTIONS ARE LAID TOGETHER THEY WILL MAKE A CONTINUOUS LINE OF WITH A SMOOTH INTERIOR FREE OF APPRECIABLE IRREGULARITIES, ALL COMPATIBLE WITH THE PERMISSIBLE VARIATIONS IN SECTION 7, ABOVE. THE JOINT WIDTH SHALL NOT EXCEED ¾".

10. WORKMANSHIP AND FINISH
THE PRECAST VAULT UNITS AND ENDWALLS SHALL BE SUBSTANTIALLY FREE OF FRACTURES. THE ENDS OF THE VAULT UNITS SHALL BE NORMAL TO THE WALLS AND CENTERLINE OF THE VAULT SECTION, WITHIN THE LIMITS OF THE VARIATIONS GIVEN IN SECTION 7, ABOVE, EXCEPT WHERE BEVELED ENDS ARE SPECIFIED. THE FACES OF THE ENDWALLS AND VAULT UNITS SHALL BE PARALLEL TO EACH OTHER, WITHIN THE LIMITS OF VARIATIONS GIVEN IN SECTION 7, ABOVE. THE SURFACE OF THE PRECAST ELEMENTS SHALL BE A SMOOTH STEEL FORM OR TROWELED SURFACE. TRAPPED AIR POCKETS CAUSING SURFACE DEFECTS SHALL BE CONSIDERED AS PART OF A SMOOTH, STEEL FORM FINISH.

11. REPAIRS
PRECAST ELEMENTS MAY BE REPAIRED, IF NECESSARY, BECAUSE OF IMPERFECTIONS IN MANUFACTURE OR HANDLING DAMAGE AND WILL BE ACCEPTABLE IF, IN THE OPINION OF THE PURCHASER, THE REPAIRS ARE SOUND, PROPERLY FINISHED AND CURED, AND THE REPAIRED SECTION CONFORMS TO THE REQUIREMENTS OF THIS SPECIFICATION.

12. INSPECTION
THE QUALITY OF MATERIALS, THE PROCESS OF MANUFACTURE, AND THE FINISHED STRUCTURES SHALL BE SUBJECT TO INSPECTION BY THE PURCHASER.

13. REJECTION
THE PRECAST ELEMENTS SHALL BE SUBJECT TO REJECTION ON ACCOUNT OF ANY OF THE SPECIFICATION REQUIREMENTS. INDIVIDUAL PRECAST ELEMENTS MAY BE REJECTED BECAUSE OF ANY OF THE FOLLOWING:
13.1. FRACTURES OR CRACKS PASSING THROUGH THE WALL, EXCEPT FOR A SINGLE END CRACK THAT DOES NOT EXCEED ONE HALF THE THICKNESS OF THE WALL.
13.2. DEFECTS THAT INDICATE PROPORTIONING, MIXING, AND MOLDING NOT IN COMPLIANCE WITH SECTION 5 OF THESE SPECIFICATIONS.
13.3. HONEYCOMBED OR OPEN TEXTURE.
13.4. DAMAGED ENDS, WHERE SUCH DAMAGE WOULD PREVENT MAKING A SATISFACTORY JOINT.

14. MARKING
EACH VAULT UNIT SHALL BE CLEARLY MARKED BY WATERPROOF PAINT. THE FOLLOWING SHALL BE SHOWN ON THE INSIDE OF THE VERTICAL LEG OF THE VAULT SECTION:
VAULT SPAN X VAULT RISE
DATE OF MANUFACTURE
NAME OR TRADEMARK OF THE MANUFACTURER

15. CONSTRUCTION REQUIREMENTS
15.1. FOOTINGS - THE VAULT UNITS AND ENDWALLS SHALL BE INSTALLED ON EITHER PRECAST OR CAST-IN-PLACE CONCRETE FOOTINGS. THE DESIGN SIZE AND ELEVATION OF THE FOOTINGS SHALL BE AS DETERMINED BY THE ENGINEER. A 3" DEEP KEYWAY SHALL BE FORMED IN THE TOP SURFACE OF THE VAULT FOOTING 3" CLEAR OF THE INSIDE AND OUTSIDE FACES OF THE BRIDGE UNITS, UNLESS SPECIFIED OTHERWISE ON THE PLANS. A KEYWAY IS ALSO REQUIRED IN THE FOOTINGS FOR THE ENDWALLS, UNLESS OTHERWISE SPECIFIED. THE FOOTINGS SHALL BE GIVEN A SMOOTH FLOAT FINISH AND SHALL REACH A COMPRESSIVE STRENGTH OF 2,000 PSI BEFORE PLACEMENT OF THE BRIDGE AND ENDWALL ELEMENTS. THE COMPLETED FOOTING SURFACE SHALL BE CONSTRUCTED IN ACCORDANCE WITH GRADES SHOWN ON THE PLANS. WHEN TESTED WITH A 10'-0" STRAIGHT EDGE, THE SURFACE SHALL NOT VARY MORE THAN ¼" IN 10'-0". IF A PRECAST CONCRETE FOOTING IS USED, THE CONTRACTOR SHALL PREPARE A 4" THICK BASE LAYER OF COMPACTED GRANULAR MATERIAL THE FULL WIDTH OF THE FOOTING PRIOR TO PLACING THE PRECAST FOOTING.
15.2. PLACEMENT OF THE VAULT UNITS AND ENDWALLS - THE VAULT UNITS AND ENDWALLS SHALL BE PLACED AS SHOWN ON THE ENGINEER'S PLAN DRAWINGS. SPECIAL CARE SHALL BE TAKEN IN SETTING THE ELEMENTS TO THE TRUE LINE AND GRADE. THE VAULT UNITS AND ENDWALLS SHALL BE SET ON 6" x 6" MASONITE OR STEEL SHIMS. A MINIMUM GAP OF ½" SHALL BE PROVIDED BETWEEN THE FOOTING AND THE BOTTOM OF THE UNIT'S VERTICAL LEGS OR THE ENDWALL. THE GAP SHALL BE FILLED WITH CEMENT GROUT (PORTLAND CEMENT AND WATER OR CEMENT MORTAR COMPOSED OF PORTLAND CEMENT, SAND AND WATER) WITH A MINIMUM 28-DAY COMPRESSIVE STRENGTH OF 3000 PSI. IF UNITS HAVE BEEN SET WITH TEMPORARY TIES (CABLES, BARS, ETC.) GROUT MUST ATTAIN A MINIMUM COMPRESSIVE STRENGTH OF 1500 PSI BEFORE TIES MAY BE REMOVED.
15.3. EXTERNAL PROTECTION OF JOINTS - THE BUTT JOINT MADE BY TWO ADJOINING VAULT UNITS SHALL BE COVERED WITH A ⅞" x 1⅜" PREFORMED BITUMINOUS JOINT SEALANT AND A MINIMUM OF A 9" WIDE JOINT WRAP. THE SURFACE SHALL BE FREE OF DIRT BEFORE APPLYING THE JOINT MATERIAL. A PRIMER COMPATIBLE WITH THE JOINT WRAP TO BE USED SHALL BE APPLIED FOR A MINIMUM WIDTH OF 9" ON EACH SIDE OF THE JOINT. THE EXTERNAL WRAP SHALL BE EITHER EZ-WRAP RUBBER BY PRESS-SEAL GASKET CORPORATION, SEAL WRAP BY MAR MAC MANUFACTURING CO. INC. OR APPROVED EQUAL. THE JOINT SHALL BE COVERED CONTINUOUSLY FROM THE BOTTOM OF ONE VAULT SECTION LEG, ACROSS THE TOP OF THE ARCH AND TO THE OPPOSITE VAULT SECTION LEG. ANY LAPS THAT RESULT IN THE JOINT WRAP SHALL BE A MINIMUM OF 6" LONG WITH THE OVERLAP RUNNING DOWNHILL.

IN ADDITION TO THE JOINTS BETWEEN VAULT UNITS, THE JOINT BETWEEN THE END VAULT UNIT AND THE ENDWALL SHALL ALSO BE SEALED AS DESCRIBED ABOVE. ALSO, IF LIFT HOLES ARE FORMED IN THE ARCH UNITS, THEY SHALL BE PRIMED AND COVERED WITH A 9" x 9" SQUARE OF JOINT WRAP.

DURING THE BACKFILLING OPERATION, CARE SHALL BE TAKEN TO KEEP THE JOINT WRAP IN ITS PROPER LOCATION OVER THE JOINT.

INTERNAL PROTECTION OF JOINTS - CERTAIN VAULTS MAY REQUIRE ADDITIONAL JOINT PROTECTION TO ENSURE THAT THE STRUCTURE IS WATER-TIGHT. VARIOUS JOINT SEALING DETAILS INCLUDING ELASTOMERIC, URETHANE, OR LIQUID SEALING MAY BE SHOWN ON THE PLANS. ANY INTERNAL JOINT SEALING SHALL BE PERFORMED AS INDICATED ON THE CONSTRUCTION PLANS.

15.4. BACKFILL - BACKFILL SHALL BE CONSIDERED AS ALL REPLACED EXCAVATION AND NEW EMBANKMENT ADJACENT TO THE CON/SPAN® VAULT UNITS AND ENDWALLS. THE PROJECT CONSTRUCTION AND MATERIAL SPECIFICATIONS WHICH INCLUDE THE SPECIFICATIONS FOR EXCAVATION FOR STRUCTURES AND ROADWAY EXCAVATION AND EMBANKMENT CONSTRUCTION, SHALL APPLY EXCEPT AS MODIFIED IN THIS SECTION.

NO BACKFILL SHALL BE PLACED AGAINST ANY STRUCTURAL ELEMENTS UNTIL THEY HAVE BEEN APPROVED BY THE ENGINEER.

BACKFILL AGAINST A WATERPROOFED SURFACE SHALL BE PLACED CAREFULLY TO AVOID DAMAGE TO THE WATERPROOFING MATERIAL.

MECHANICAL TAMPERS OR APPROVED COMPACTING EQUIPMENT SHALL BE USED TO COMPACT ALL BACKFILL AND EMBANKMENT IMMEDIATELY ADJACENT TO EACH SIDE AND OVER THE TOP OF EACH VAULT UNIT UNTIL IT IS COVERED TO A MINIMUM DEPTH OF 1'-0", UNLESS THE DESIGN FILL HEIGHT IS LESS THAN 1'-0". THE BACKFILL WITHIN THE CRITICAL BACKFILL ZONE (SHOWN IN THE DIAGRAMS ON THE NEXT SHEET) SHALL BE PLACED IN LIFTS OF 8" OR LESS (LOOSE DEPTH). HEAVY COMPACTION EQUIPMENT SHALL NOT BE OPERATED IN THIS AREA OR OVER THE BRIDGE UNTIL IT IS COVERED TO A DEPTH OF 1'-0", UNLESS THE DESIGN FILL HEIGHT IS LESS THAN 1'-0".

LIGHTWEIGHT DOZERS AND GRADERS MAY BE OPERATED OVER VAULT UNITS HAVING 1'-0" OF COMPACTED COVER, BUT HEAVY EARTH MOVING EQUIPMENT (LARGER THAN A D-4 DOZER WEIGHING IN EXCESS OF 12 TONS AND HAVING TRACK PRESSURES OF 8 PSI OR GREATER) SHALL REQUIRE 2'-0" OF COVER UNLESS THE DESIGN COVER IS LESS THAN 2'-0". IN NO CASE SHALL EQUIPMENT OPERATING IN EXCESS OF THE DESIGN LOAD (HS20 OR HS25) BE PERMITTED OVER THE VAULT UNITS UNLESS APPROVED BY CON/SPAN®.

28'-0"SPANx11'-0"RISE CON/SPAN DETENTION SYSTEM-000000-001
SAMPLE PROJECT
ANYTOWN, USA
SITE DESIGNATION: URS
SHEET NO.: CT6 OF CT7

SPECIFICATIONS FOR MANUFACTURE AND INSTALLATION OF CON/SPAN® STORMWATER SYSTEMS (CONT'D)

ANY ADDITIONAL FILL AND SUBSEQUENT EXCAVATION REQUIRED TO PROVIDE THIS MINIMUM COVER SHALL BE MADE AT NO ADDITIONAL COST TO THE PROJECT.

AS A PRECAUTION AGAINST INTRODUCING UNBALANCED STRESSES IN THE VAULT, WHEN PLACING BACKFILL AT NO TIME SHALL THE DIFFERENCE BETWEEN THE HEIGHTS OF FILL ON OPPOSITE SIDES OF THE VAULT EXCEED 2'-0".

FOR FILL HEIGHTS OVER 12'-0", NO BACKFILLING MAY BEGIN UNTIL A BACKFILL COMPACTION TESTING PLAN HAS BEEN COORDINATED WITH AND APPROVED BY CON/SPAN®. COST OF THE BACKFILL COMPACTION TESTING SHALL BE INCLUDED IN THE COST OF THE PRECAST UNITS. THIS INCLUDED COST APPLIES ONLY TO PROJECTS WITH FILL HEIGHTS OVER 12'-0" (AS MEASURED FROM TOP CROWN OF ARCH TO FINISHED GRADE).

16. QUALITY ASSURANCE
THE PRECASTER SHALL DEMONSTRATE ADHERENCE TO THE STANDARDS SET FORTH IN THE NPCA QUALITY CONTROL MANUAL. THE PRECASTER SHALL MEET EITHER SECTION 16.1 OR 16.2.
16.1. CERTIFICATION - THE PRECASTER SHALL BE CERTIFIED BY THE PRECAST/PRESTRESSED CONCRETE INSTITUTE PLANT CERTIFICATION PROGRAM OR THE NATIONAL PRECAST CONCRETE ASSOCIATION'S PLANT CERTIFICATION PROGRAM PRIOR TO AND DURING PRODUCTION OF THE PRODUCTS COVERED BY THIS SPECIFICATION.
16.2. QUALIFICATIONS, TESTING AND INSPECTION
16.2.1. THE PRECASTER SHALL HAVE BEEN IN THE BUSINESS OF PRODUCING PRECAST CONCRETE PRODUCTS SIMILAR TO THOSE SPECIFIED FOR A MINIMUM OF 3 YEARS. HE SHALL MAINTAIN A PERMANENT QUALITY CONTROL DEPARTMENT OR RETAIN AN INDEPENDENT TESTING AGENCY ON A CONTINUING BASIS. THE AGENCY SHALL ISSUE A REPORT, CERTIFIED BY A LICENSED ENGINEER, DETAILING THE ABILITY OF THE PRECASTER TO PRODUCE QUALITY PRODUCTS CONSISTENT WITH INDUSTRY STANDARDS.
16.2.2. THE PRECASTER SHALL SHOW THAT THE FOLLOWING TESTS ARE PERFORMED IN ACCORDANCE WITH THE ASTM STANDARDS INDICATED. TESTS SHALL BE PERFORMED FOR EACH 150 CUBIC YARDS OF CONCRETE PLACED, BUT NOT LESS FREQUENTLY THAN ONCE PER PRODUCTION RUN, AS DEFINED IN SECTION 8 OF THESE SPECIFICATIONS.
16.2.2.1. AIR CONTENT: C231 OR C173
16.2.2.2. COMPRESSIVE STRENGTH: C39, C497
16.2.3. THE PRECASTER SHALL PROVIDE DOCUMENTATION DEMONSTRATING COMPLIANCE WITH THIS SECTION TO CON/SPAN® AT REGULAR INTERVALS OR UPON REQUEST.
16.2.4. THE OWNER MAY PLACE AN INSPECTOR IN THE PLANT WHEN THE PRODUCTS COVERED BY THIS SPECIFICATION ARE BEING MANUFACTURED.

BACKFILL DESCRIPTION (AASHTO M 145-91)

GROUP CLASSIFICATION	A-1		A-3	A-2				A-4
	A-1-A	A-1-B		A-2-4	A-2-5	A-2-6	A-2-7	
SIEVE ANALYSIS, PERCENT PASSING (100% PASSING 3" SIEVE)								
NO. 10	50 MAX.							
NO. 40	30 MAX.	50 MAX.	51 MIN.					
NO. 200	15 MAX.	25 MAX.	10 MAX.	35 MAX.	35 MAX.	35 MAX.	35 MAX.	36 MIN.
CHARACTERISTICS OF FRACTION PASSING NO. 40								
LIQUID LIMIT				40 MAX.	41 MIN.	40 MAX.	41 MIN.	40 MAX.
PLASTICITY INDEX	6 MAX.		N.P.	10 MAX.	10 MAX.	11 MIN.	11 MIN.	10 MAX.
USUAL TYPES OF SIGNIFICANT CONSTITUENT MATERIALS	STONE FRAGMENTS, GRAVEL & SAND		FINE SAND	SILTY OR CLAYEY GRAVEL AND SAND				SILTY SOILS
GENERAL RATING AS SUBGRADE	EXCELLENT TO GOOD							FAIR TO POOR

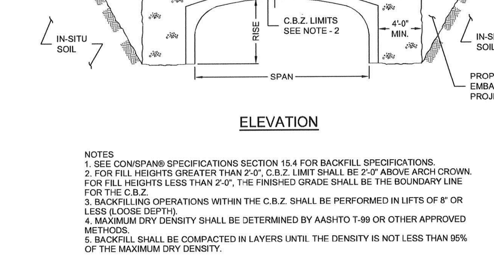

ELEVATION

NOTES
1. SEE CON/SPAN® SPECIFICATIONS SECTION 15.4 FOR BACKFILL SPECIFICATIONS.
2. FOR FILL HEIGHTS GREATER THAN 2'-0", C.B.Z. LIMIT SHALL BE 2'-0" ABOVE ARCH CROWN. FOR FILL HEIGHTS LESS THAN 2'-0", THE FINISHED GRADE SHALL BE THE BOUNDARY LINE FOR THE C.B.Z.
3. BACKFILLING OPERATIONS WITHIN THE C.B.Z. SHALL BE PERFORMED IN LIFTS OF 8" OR LESS (LOOSE DEPTH).
4. MAXIMUM DRY DENSITY SHALL BE DETERMINED BY AASHTO T-99 OR OTHER APPROVED METHODS.
5. BACKFILL SHALL BE COMPACTED IN LAYERS UNTIL THE DENSITY IS NOT LESS THAN 95% OF THE MAXIMUM DRY DENSITY.

SPAN	FILL HEIGHT	ACCEPTABLE MATERIAL INSIDE C.B.Z.	ACCEPTABLE MATERIAL INSIDE C.B.Z.
≤ 24'-0"	≥ 12'-0"	A1, A3	**
≤ 24'-0"	< 12'-0"	A1, A2, A3, A4	**
> 24'-0"	ALL	A1, A3	**

** EMBANKMENT MATERIAL PER PROJECT SPECIFICATIONS

BACKFILL REQUIREMENTS

NOTES
GENERAL NOTES:
1. THIS VAULT HAS BEEN DESIGNED FOR GENERAL SITE CONDITIONS. THE PROJECT ENGINEER SHALL BE RESPONSIBLE FOR THE STRUCTURE'S SUITABILITY TO THE EXISTING SITE CONDITIONS AND FOR THE HYDRAULIC EVALUATION -- INCLUDING CONFIRMATION OF SOIL CONDITIONS.
2. PRIOR TO CONSTRUCTION, CONTRACTOR MUST VERIFY ALL ELEVATIONS SHOWN THROUGH THE ENGINEER.
3. ONLY CONTECH CONSTRUCTION PRODUCTS INC. THE CON/SPAN® APPROVED PRECASTER IN STATE MAY PROVIDE THE STRUCTURE DESIGNED IN ACCORDANCE WITH THESE PLANS.
4. MAXIMUM WEIGHT OF PRECAST UNIT EQUALS XX.X TONS.

DESIGN DATA
DESIGN LOADING:
VAULT UNITS: HS20-44
DESIGN FILL HEIGHT: 1'-0" MIN. TO 2'-0" MAX.
FROM TOP OF CROWN TO TOP OF PAVEMENT.
DESIGN METHOD: LOAD FACTOR PER AASHTO SPECIFICATION
ASSUMED NET ALLOWABLE SOIL BEARING PRESSURE: XXXX PSF*
STORAGE VOLUME PROVIDED = X,XXX FT

*FOUNDATION EXCAVATION AND SUBGRADE PREPARATION SHALL BE IN ACCORDANCE WITH THE GEOTECHNICAL REPORT FOR THIS PROJECT PREPARED BY EARTH TECH INC. DATED XX/XX/XX

MATERIALS
PRECAST UNITS SHALL BE CONSTRUCTED AND INSTALLED IN ACCORDANCE WITH CON/SPAN® SPECIFICATIONS. CONCRETE FOR FOOTINGS SHALL HAVE A MINIMUM COMPRESSIVE STRENGTH OF 4000 PSI. REINFORCING STEEL FOR FOOTINGS SHALL CONFORM TO ASTM A615 OR A996-GRADE 60.

STORAGE VAULT GENERAL NOTES
A. ALL PIPE/STRUCTURE CONNECTIONS TO BE FIT WITH A NON-SHRINK GROUT. EXACT BLOCKOUT SIZE PER MANUFACTURER SPECIFICATIONS.
B. DIMENSIONS AND ELEVATIONS TO BE FIELD ADJUSTED TO MATCH FINISHED GRADE.
C. MAXIMUM ELEVATION FOR STORAGE VAULT LOCATED AT T/INSIDE ARCH ELEV. XX.X

28'-0"SPANx11'-0"RISE CON/SPAN DETENTION SYSTEM-000000-001
SAMPLE PROJECT
ANYTOWN, USA
SITE DESIGNATION: URS
SHEET NO.: CT7 OF CT7

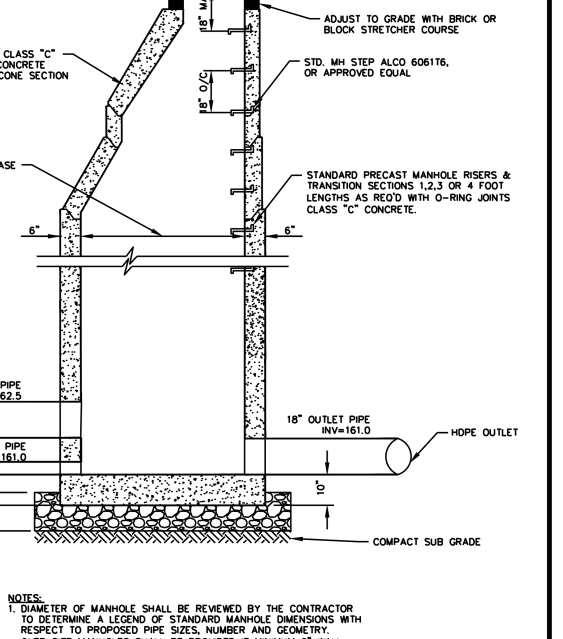

NOTES:
1. DIAMETER OF MANHOLE SHALL BE REVIEWED BY THE CONTRACTOR TO DETERMINE A LEGEND OF STANDARD MANHOLE DIMENSIONS WITH RESPECT TO PROPOSED PIPE SIZES, NUMBER AND GEOMETRY. OVER SIZE MANHOLES SHALL BE PROVIDED IF MINIMUM 6" WALL DIMENSION BETWEEN PIPES IS NOT MANUFACTURED.
2. MANHOLES SHALL BE STANDARD PRECAST CONCRETE UNITS AND SHALL BE DESIGNED AND CONSTRUCTED BY THE MANUFACTURER TO SUPPORT TRUCK HS20 LOADING.

SUBSURFACE DETENTION BASIN B OUTLET CONTROL STRUCTURE (MH-7)

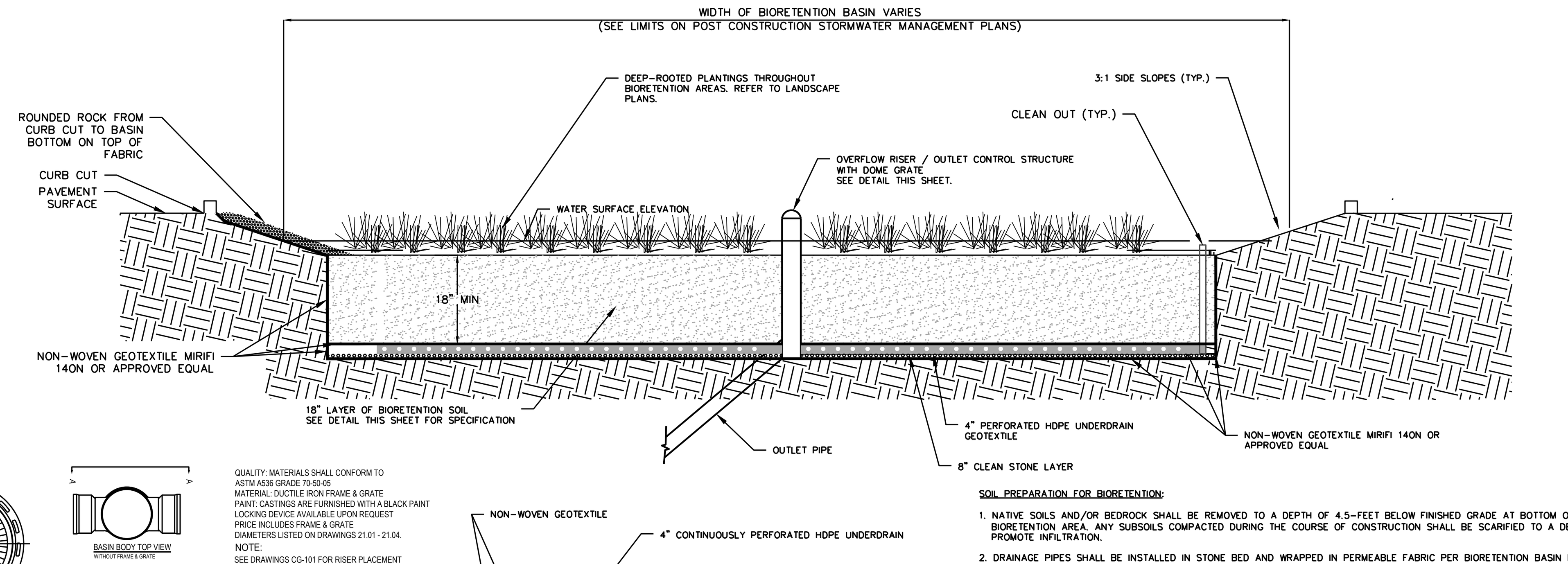

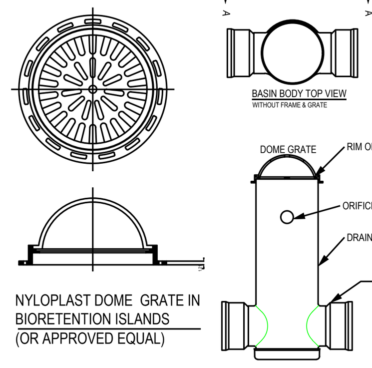

QUALITY: MATERIALS SHALL CONFORM TO ASTM A536 GRADE 70-50-05
MATERIAL: DUCTILE IRON FRAME & GRATE
PAINT: CASTINGS ARE FURNISHED WITH A BLACK PAINT
LOCKING DEVICE AVAILABLE UPON REQUEST
PRICE INCLUDES FRAME & GRATE
DIAMETERS LISTED ON DRAWINGS 21.01 - 21.04.
NOTE:
SEE DRAWINGS CG-101 FOR RISER PLACEMENT AND DIAMETER SIZE.

NYLOPLAST DOME GRATE IN BIORETENTION ISLANDS (OR APPROVED EQUAL)

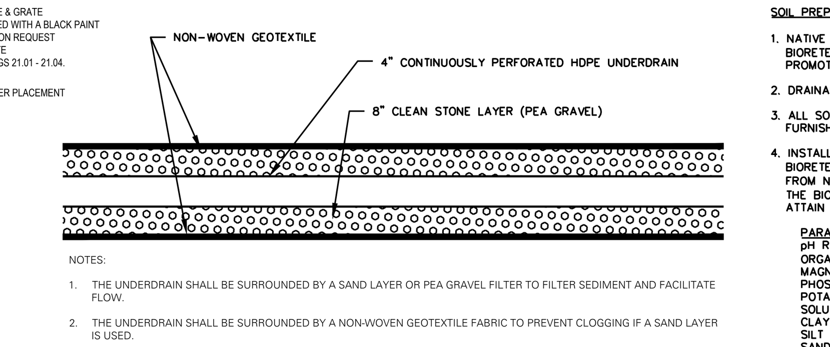

NOTES:
1. THE UNDERDRAIN SHALL BE SURROUNDED BY A SAND LAYER OR PEA GRAVEL FILTER TO FILTER SEDIMENT AND FACILITATE FLOW.
2. THE UNDERDRAIN SHALL BE SURROUNDED BY A NON-WOVEN GEOTEXTILE FABRIC TO PREVENT CLOGGING IF A SAND LAYER IS USED.
3. THE UNDERDRAIN SHALL BE CONTINUOUSLY PERFORATED WITH A SMOOTH INTERIOR.
4. THE UNDERDRAIN SHALL HAVE A MINIMUM INSIDE DIAMETER OF 4 INCHES.
5. HIGH-DENSITY POLYETHYLENE PIPE, IF USED, MUST MEET THE SPECIFICATIONS OF AASHTO M252, TYPE S OR AASHTO M294, TYPE S.

SOIL PREPARATION FOR BIORETENTION:
1. NATIVE SOILS AND/OR BEDROCK SHALL BE REMOVED TO A DEPTH OF 4.5-FEET BELOW FINISHED GRADE AT BOTTOM OF THE BIORETENTION AREA. ANY SUBSOILS COMPACTED DURING THE COURSE OF CONSTRUCTION SHALL BE SCARIFIED TO A DEPTH OF 12" TO PROMOTE INFILTRATION.
2. DRAINAGE PIPES SHALL BE INSTALLED IN STONE BED AND WRAPPED IN PERMEABLE FABRIC PER BIORETENTION BASIN DETAIL.
3. ALL SOILS SHALL MEET REMEDIATION STANDARDS OF THE STATE AND FOR THE PROPOSED USE PROOF OF COMPLIANCE SHALL BE FURNISHED BY THE CONTRACTOR PRIOR TO DELIVERY OF SOIL TO SITE.
4. INSTALL THE BIORETENTION SOIL MIX* OVER THE EXPOSED SUBBASE TO THE DEPTH INDICATED IN CROSS SECTIONAL DETAIL. THE BIORETENTION SOIL MIX SHOULD BE FREE OF STONES, STUMPS, ROOTS OR OTHER MATERIAL OVER 1" IN DIAMETER. BRUSH OR SEEDS FROM NOXIOUS WEEDS SHOULD NOT BE PRESENT IN THE SOIL. SOIL SHALL BE PLACED IN 12-18" LIFTS THAT ARE LOOSELY COMPACTED. THE BIORETENTION SOILS SHALL HAVE THE FOLLOWING CHARACTERISTICS AND SAND/SILT/CLAY RANGES SHOULD BE ADJUSTED TO ATTAIN SPECIFIED PERMEABILITY RATES FOR THE PROJECT.

PARAMETER	VALUE
pH RANGE	5.2-6.0
ORGANIC MATTER	1.5-4% (BY WEIGHT)
MAGNESIUM	35 LBS PER ACRE
PHOSPHOROUS	75 LBS PER ACRE
POTASSIUM	85 LBS PER ACRE
SOLUBLE SALTS	<500 PPM
CLAY	<10%
SILT	15-15%
SAND	65-75%

*SUBMIT SAMPLE AND COMPLETE SOIL TEST RESULTS FOR BIORETENTION SOIL MIX TO LANDSCAPE ARCHITECT FOR REVIEW AND APPROVAL PRIOR TO INSTALLATION.

BIO-RETENTION DETAIL (TYP.)

EACH INSPECTION/MAINTENANCE EVENT FOR THE FOLLOWING SCHEDULE SHALL BE ACCOMPANIED BY A WRITTEN REPORT DOCUMENTING THE INSPECTION AND REPAIRS.

INLETS AND MANHOLES MAINTENANCE:

Inlets should be inspected quarterly and cleaned out at least annually. Debris from the sump in the inlets and manholes should be collected and disposed of properly.

SURFACE INFILTRATION MAINTENANCE:

The surface infiltration basins should be inspected quarterly and after major storms. Detailed inspections by a qualified inspector should occur at least annually to ensure that the bioretention basins are operating as designed and to schedule maintenance that the bioretention basins may require. If possible, inspections should be made during wet weather to ensure that the facility is maintaining desirable retention times. In addition to regularly scheduled inspections, deficiencies should be noted during any visits by maintenance personnel.

All basin components expected to receive and/or trap debris and sediment must be inspected for clogging and excessive debris and sediment accumulation at least four times annually as well as after every storm exceeding one inch of rainfall. Such components may include bottoms, riprap, and inflow points. Sediment removal should take place when the basin is thoroughly dry. Disposal of debris and trash should be done at suitable disposal/recycling sites and in compliance with all applicable local, state and federal waste regulations.

Vegetation
Vegetation in the basin should be maintained and mowed or trimmed as necessary to sustain the system. Vegetative cover should stay above 95%. Basins with less than 95% coverage should be revegetated in accordance with landscape plans, details and notes. While vegetation is being established, pruning and weeding may be required to eliminate invasive exotic plants. Weeds should be removed regularly during the growing season by hand. Detritus may also need to be removed approximately twice per year. Perennial and meadow grasses may be cut back to no less than 8" height in late winter using a brush hog type machine; standard lawn mowers may not be used in any meadow areas or basin bottoms. Care should be taken to avoid cutting woody species that were interplanted in the basin bottom, when cutting back the meadow species. During the establishment period and periods of extended drought, the bioretention basins may require watering. Trees and shrubs should be inspected twice per year to evaluate health.

Vegetated areas must also be inspected at least annually for erosion and scour. The structures must be inspected for unwanted tree growth at least once a year. When establishing or restoring vegetation, biweekly inspections of vegetation health should be performed during the first growing season or until the vegetation is established. Once established, inspections of vegetation health, density and diversity should be performed at least twice annually during both the growing and non-growing season. If vegetation has greater than 50 percent damage, the area should be reestablished in accordance with the original plans, details and notes and the inspection requirements presented above.

BIO-RETENTION FACILITY MAINTENANCE:

While vegetation is being established, pruning and weeding may be required. Detritus may also need to be removed every year. Perennial plantings may be cut down at the end of the growing season. Mulch should be re-spread when erosion is evident and be replensihed as needed. Once every 2 to 3 years the entire area may require mulch replacement. Bioretention areas should be inspected at least two times per year for sediment buildup, erosion, vegetative conditions, etc. During periods of extended drought, bioretention areas may require watering. Trees and shrubs should be inspected twice per year to evaluate health.

OUTLET CONTROL STRUCTURE MAINTENANCE:

All structural components must be inspected for cracking, subsidence, spalling, erosion, and deterioration at least annually. The outlet structures should be inspected after heavy rains to see if any erosion around or below the structure has taken place or if the orifices have been blocked by debris. All needed repairs should be performed immediately to prevent further damage.

CONSTRUCTION INSPECTION:
Inspection during critical stages of implementation of PCSM Plan for which a licensed professional or designee will be present on site:

- Installation of the subsurface detention system, including the excavation, the pipe installation, the outlet control installation; and Installation of the bioretention areas, including the preparation of the scarified bottom, the installation of the geotextile, the placement of clean-washed stone, the placement of underdrains and connection to overflow and the installation of the vegetation.

SUBSURFACE INFILTRATION BED:

All bed bottoms should be at level grade.
All Catch basins and inlets should be inspected and cleaned at least 2 times per year

Subsurface Detention Maintenance Guidelines	
Activity	Schedule
Regularly clean out gutters and catch basins to reduce sediment load to system. Clean intermediate sump boxes, replace filters, and otherwise clean pretreatment areas in directly connected systems.	As needed
Inspect and clean as needed all components of and connections to subsurface detention system.	Biannually
Maintain records of all inspections and maintenance activity.	Ongoing

BMP MAINTENANCE AND INSPECTION SCHEDULE

Date	Description	No.
8/8/2016	REVISIONS PER TOWNSHIP AND COUNTY COMMENTS	1.

REVISIONS

BRIAN M. CONLON DATE
PROFESSIONAL ENGINEER
PA Lic. No. PE061782

LANGAN
30 South 17th Street, Suite 1300, Philadelphia, PA 19103
T: 215.864.0640 F: 215.864.0671 www.langan.com
NEW JERSEY NEW YORK CONNECTICUT PENNSYLVANIA OHIO VIRGINIA WASHINGTON DC FLORIDA NORTH DAKOTA CALIFORNIA
ABU DHABI ATHENS DOHA DUBAI ISTANBUL
Langan Engineering, Environmental, Surveying and Landscape Architecture, D.P.C.
Langan Engineering and Environmental Services, Inc.
Langan CT, Inc.
Langan International LLC
Collectively known as Langan

Project
THE MARKETPLACE AT NESHAMINY
BENSALEM TOWNSHIP
BUCKS COUNTY PENNSYLVANIA

Drawing Title
POST CONSTRUCTION STORMWATER MANAGEMENT DETAILS III

Project No. 220048102	Drawing No.
Date 24 JUNE 2016	CG-503
Scale N.T.S.	
Drawn By TFH	
Checked By BMC	SHEET 19 OF 29

© 2014 Langan

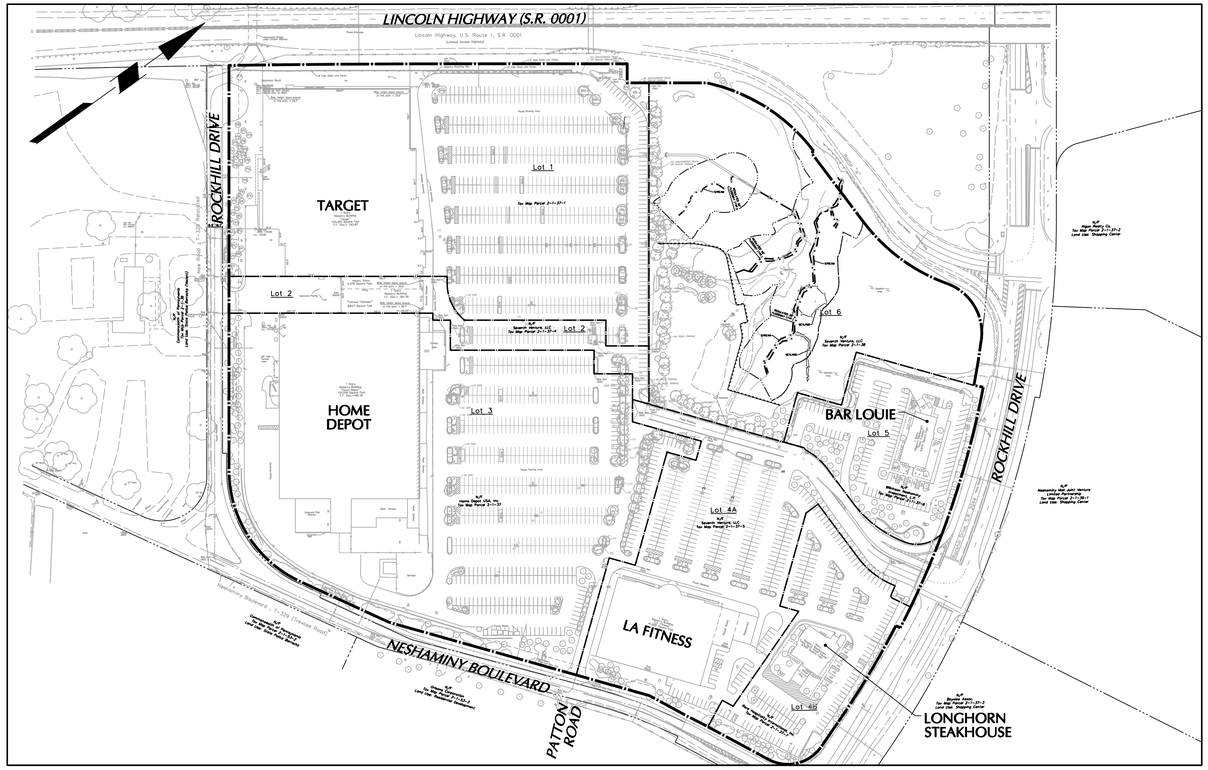

EXISTING CONDITIONS PLAN
SCALE 1" = 150'

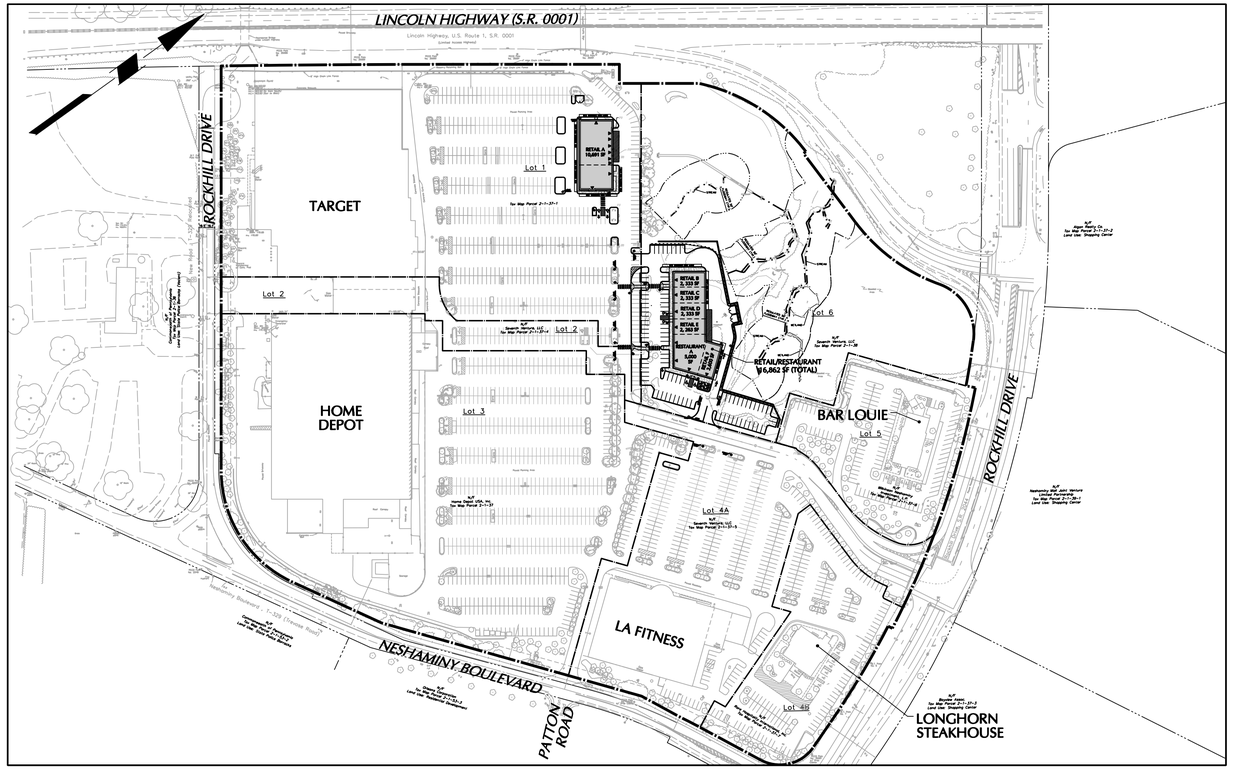

PROPOSED SITE PLAN
SCALE 1" = 150'

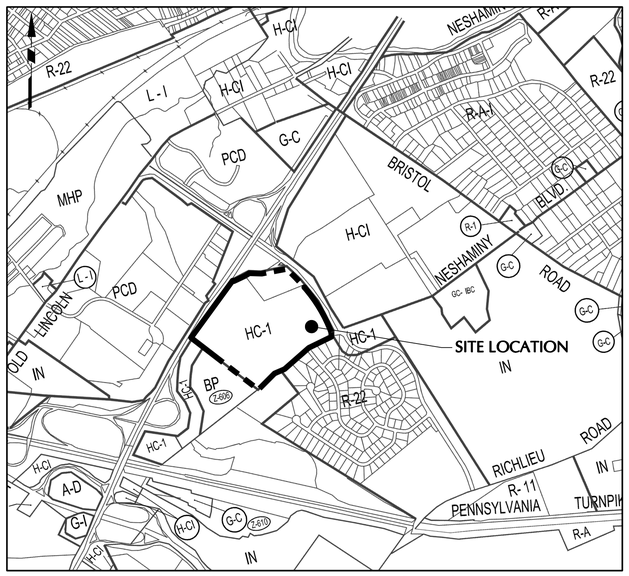

ZONING MAP - BENSALEM TOWNSHIP BUCKS COUNTY, PA
SCALE 1" = 1000'

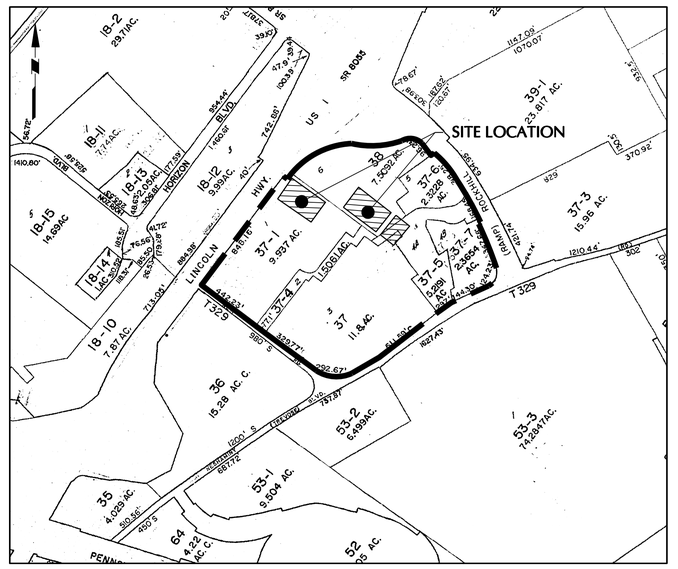

TAX MAP - BENSALEM TOWNSHIP BUCKS COUNTY, PA
SCALE 1" = 500'

No.	Description	Date
1.	REVISIONS PER TOWNSHIP AND COUNTY COMMENTS	8/8/2016

REVISIONS

BRIAN M. CONLON — DATE
PROFESSIONAL ENGINEER
PA Lic. No. PE061782

LANGAN
30 South 17th Street, Suite 1300, Philadelphia, PA 19103
T: 215.864.0640 F: 215.864.0671 www.langan.com
NEW JERSEY NEW YORK CONNECTICUT PENNSYLVANIA OHIO
VIRGINIA WASHINGTON DC FLORIDA NORTH DAKOTA CALIFORNIA
ABU DHABI ATHENS DOHA DUBAI ISTANBUL
Langan Engineering, Environmental, Surveying and Landscape Architecture, D.P.C.
Langan Engineering and Environmental Services, Inc.
Langan CT, Inc.
Langan International LLC
Collectively known as Langan

Project
THE MARKETPLACE AT NESHAMINY
BENSALEM TOWNSHIP
BUCKS COUNTY PENNSYLVANIA

Drawing Title
TAX MAP, ZONING MAP AND ADJACENT PROPERTY OWNER LIST

Project No. 220048101	Drawing No. GI-101
Date 24 JUNE 2016	
Scale AS NOTED	
Drawn By TFH	
Checked By	SHEET 2 OF 29

© 2016 Langan

CONSTRUCTION SEQUENCE - STAGE I:

1. ALL EARTH DISTURBANCE ACTIVITIES SHALL PROCEED IN ACCORDANCE WITH THE FOLLOWING SEQUENCE. EACH STAGE SHALL BE COMPLETED AND IMMEDIATELY STABILIZED BEFORE ANY FOLLOWING STAGE IS INITIATED. CLEARING, GRUBBING AND TOPSOIL STRIPPING SHALL BE LIMITED TO THOSE AREAS DESCRIBED IN EACH STAGE.
2. AT LEAST 7 DAYS BEFORE STARTING ANY EARTH DISTURBANCE ACTIVITIES, INCLUDING CLEARING AND GRUBBING, THE OWNER AND/OR OPERATOR SHALL INVITE ALL CONTRACTORS, THE LANDOWNER, ALL APPROPRIATE MUNICIPAL OFFICIALS, THE E&S PLAN PREPARER, PCSM PLAN PREPARER, THE LICENSED PROFESSIONAL RESPONSIBLE FOR OVERSIGHT OF CRITICAL STAGES OF IMPLEMENTATION OF THE PCSM PLAN, AND A REPRESENTATIVE OF THE BUCKS COUNTY CONSERVATION DISTRICT TO AN ON-SITE PRE-CONSTRUCTION MEETING.
3. AT LEAST 3 DAYS BEFORE STARTING ANY EARTH DISTURBANCE ACTIVITIES, ALL CONTRACTORS INVOLVED IN THOSE ACTIVITIES SHALL NOTIFY THE PENNSYLVANIA ONE CALL SYSTEM INCORPORATED AT 1-800-242-1776 FOR THE LOCATION OF EXISTING UNDERGROUND UTILITIES.
4. MARK OUT THE LIMIT OF DISTURBANCE FOR CONSTRUCTION ACTIVITIES AS SHOWN ON DRAWINGS. THE LIMIT OF DISTURBANCE MUST BE CLEARLY DELINEATED BY SURVEY STAKE OR CONSTRUCTION FENCING. ALSO INSTALL TREE PROTECTION FENCING AT ALL AREAS NECESSARY.
5. INSTALL TEMPORARY CONSTRUCTION FENCE AS SHOWN ON THIS SHEET AND AS DIRECTED BY THE CONSTRUCTION MANAGER AND/OR TOWNSHIP/COUNTY OFFICIALS. FENCE LOCATION MUST PROTECT THE PUBLIC FROM LAND DISTURBANCE ACTIVITIES AND MAINTAIN SAFE VEHICULAR TRAFFIC PATTERNS.
6. INSTALL COMPOST FILTER SOCK AND INLET PROTECTION ON EXISTING INLETS AS SHOWN ON THE PLANS.
7. INSTALL STABILIZED CONSTRUCTION ENTRANCE AS SHOWN ON THIS SHEET AND IN ACCORDANCE WITH THE CONSTRUCTION ENTRANCE DETAIL SHOWN ON DRAWING NO. CE-501.
8. REMOVE EXISTING FEATURES TO LIMITS INDICATED ON DEMOLITION PLAN, CD-101. CONTRACTOR SHALL COORDINATE WITH APPROPRIATE UTILITY COMPANIES AND PROPERTY OWNER SO AS TO NOT INTERRUPT UTILITY SERVICE TO THE EXISTING TENANTS. NOTE THAT DRAINAGE STRUCTURES AND PIPES SHOULD NOT BE REMOVED UNTIL INDICATED ON DRAWINGS.
9. WHEN NO WORK IS TO BE PERFORMED ON ANY AREA, IT SHALL BE PROTECTED IMMEDIATELY BY TEMPORARY SEEDING, MULCHING OR SODDING.
10. BEFORE DISPOSING OF SOIL OR RECEIVING BORROW FOR THE SITE, THE OPERATOR MUST ASSURE THAT EACH SPOIL OR BORROW AREA HAS AN EROSION AND SEDIMENT CONTROL PLAN APPROVED BY THE PENNSYLVANIA DEPARTMENT OF ENVIRONMENTAL PROTECTION AND WHICH IS BEING IMPLEMENTED AND MAINTAINED ACCORDING TO CHAPTER 102 REGULATIONS.
11. REFER TO DRAWINGS FOR SOIL EROSION AND SEDIMENT CONTROL MAINTENANCE PROGRAM.

GENERAL SITE NOTES:

1. THE CONTRACTOR SHALL FURNISH, INSTALL, TEST AND COMPLETE ALL WORK TO THE SATISFACTION OF THE ENGINEER AND OWNER IN ACCORDANCE WITH THE CONTRACT DOCUMENTS. THE CONTRACTOR IS SOLELY RESPONSIBLE FOR MEANS AND METHODS OF CONSTRUCTION; AS SUCH, THESE PLANS DO NOT COMPLETELY REPRESENT, NOR ARE THEY INTENDED TO REPRESENT, ALL SPECIFIC INSTRUCTIONS REQUIRED FOR SITEWORK CONSTRUCTION. THE CONTRACTOR IS RESPONSIBLE TO CONSTRUCT ALL IMPROVEMENTS DEPICTED ON THESE PLANS IN ACCORDANCE WITH ALL APPLICABLE RULES, REGULATIONS AND LAWS IN EFFECT AT THE TIME OF CONSTRUCTION.
2. THE CONTRACTOR SHALL ACCEPT THE SITE AS IS. THE CONTRACTOR SHALL ASSESS CONDITIONS, AND THE KIND, QUALITY AND QUANTITY OF WORK REQUIRED. THE OWNER AND ENGINEER MAKE NO GUARANTEE IN REGARD TO THE ACCURACY OF ANY INFORMATION THAT WAS OBTAINED DURING INVESTIGATIONS. THE CONTRACTOR SHALL: MAKE A THOROUGH SITE INSPECTION IN ORDER TO FIELD CHECK EXISTING SITE CONDITIONS; CORRELATE CONDITIONS WITH THE DRAWINGS; AND, RESOLVE ANY POSSIBLE CONSTRUCTION CONFLICTS WITH THE OWNER AND ENGINEER PRIOR TO COMMENCEMENT OF WORK. THE CONTRACTOR SHALL PERFORM ADDITIONAL TOPOGRAPHIC SURVEYS HE/SHE DEEMS NECESSARY, PROVIDED THEY ARE COORDINATED WITH THE OWNER. ANY CONDITIONS DETERMINED BY THE CONTRACTOR THAT DIFFER FROM THE INFORMATION SHOWN ON THE DRAWINGS THAT ARE NOT BROUGHT TO THE ATTENTION OF THE OWNER AND ENGINEER PRIOR TO THE START OF WORK SHALL NOT BE CONSIDERED GROUNDS FOR ADDITIONAL PAYMENT OR CHANGES TO THE CONTRACT DURATION, OR ANY OTHER CLAIMS AGAINST THE OWNER OR OWNER'S ENGINEER.
3. THE CONTRACTOR SHALL, WHEN HE/SHE DEEMS NECESSARY, PROVIDE A WRITTEN REQUEST FOR INFORMATION (RFI) TO THE OWNER AND/OR OWNER'S DESIGNATED REPRESENTATIVE, AND ENGINEER PRIOR TO THE CONSTRUCTION OF ANY SPECIFIC SITEWORK ITEM. THE (RFI) SHALL BE IN A FORM ACCEPTABLE TO OWNER AND/OR OWNER'S DESIGNATED REPRESENTATIVE, AND ENGINEER AND SHALL ALLOW FOR A MINIMUM OF THREE WORK DAYS FOR A WRITTEN REPLY. RFIS SHALL BE NUMBERED CONSECUTIVELY BY DATE SUBMITTED. THE CONTRACTOR SHALL BE SOLELY RESPONSIBLE FOR SITEWORK ITEMS CONSTRUCTED DIFFERENTLY THAN INTENDED OR AS DEPICTED ON THE PLANS.
4. INFORMATION RELATED TO ELEVATIONS AND PROPOSED UTILITIES (SUCH AS ROADWAY GRADES, INVERT ELEVATIONS, RIM ELEVATIONS, GRATE ELEVATIONS, BUILDING FINISHED FLOOR ELEVATIONS, ETC.) MAY BE FOUND IN MORE THAN ONE LOCATION IN THE CONTRACT DOCUMENTS. THE CONTRACTOR SHALL SUFFICIENTLY REVIEW ALL PLANS, PROFILES AND ANY OTHER INFORMATION IN THE CONTRACT DOCUMENTS FOR CONSISTENCY PRIOR TO BID. ANY INCONSISTENCIES OR DISCREPANCIES THAT ARE FOUND BY THE CONTRACTOR OR HIS ASSIGNS SHALL BE IMMEDIATELY BROUGHT TO THE ATTENTION OF THE OWNER AND ENGINEER IN WRITING, IN THE FORMAT OF AN RFI PRIOR TO BID.
5. THERE ARE ADDITIONAL NOTES, SPECIFICATIONS AND REQUIREMENTS CONTAINED THROUGHOUT THE PLAN SET AS WELL AS REFERENCES TO SPECIFICATIONS FROM APPLICABLE GOVERNING AUTHORITIES AND INDUSTRY STANDARDS. IT IS THE CONTRACTOR'S RESPONSIBILITY TO OBTAIN, REVIEW AND ADHERE TO ALL THESE DOCUMENTS.
6. CONTRACTOR IS SPECIFICALLY CAUTIONED THAT ALL CONSTRUCTION STAKEOUT FOR THIS PROJECT MUST BE COMPLETED FROM THE SITE SPECIFIC SURVEY CONTROL (HORIZONTAL AND VERTICAL) UPON WHICH THE DESIGN IS BASED. THE CONTRACTOR SHOULD NOT RELY ON OR RE-ESTABLISH SURVEY CONTROL BY GPS OR OTHER METHODS FOR USE IN CONSTRUCTION STAKEOUT OR ANY OTHER PURPOSE FOR THIS PROJECT. ANY DISCREPANCIES BETWEEN THE EXISTING HORIZONTAL OR VERTICAL DATA SHOWN ON THESE DRAWINGS AND THAT ENCOUNTERED IN THE FIELD MUST BE REPORTED TO THE DESIGN TEAM PRIOR TO CONSTRUCTION FOR RESOLUTION.

GENERAL E&S NOTES

1. A COPY OF THE APPROVED EROSION AND SEDIMENT CONTROL PLAN MUST BE AVAILABLE AT THE PROJECT SITE AT ALL TIMES. THE BUCKS COUNTY CONSERVATION DISTRICT SHALL BE NOTIFIED OF ANY CHANGES TO THE APPROVED PLAN PRIOR TO IMPLEMENTATION OF THOSE CHANGES. THE DISTRICT MAY REQUIRE A WRITTEN SUBMITTAL OF THOSE CHANGES FOR REVIEW AND APPROVAL AT ITS DISCRETION.
2. IMMEDIATELY UPON DISCOVERING UNFORESEEN CIRCUMSTANCES POSING THE POTENTIAL FOR ACCELERATED EROSION AND/OR SEDIMENT POLLUTION, THE OPERATOR SHALL IMPLEMENT APPROPRIATE BEST MANAGEMENT PRACTICES TO MINIMIZE THE POTENTIAL FOR ACCELERATED EROSION AND/OR SEDIMENT POLLUTION AND NOTIFY THE BUCKS COUNTY CONSERVATION DISTRICT.
3. ALL PUMPING OF SEDIMENT LADEN WATER SHALL BE THROUGH A SEDIMENT CONTROL BMP, SUCH AS A PUMPED WATER FILTER BAG OR EQUIVALENT SEDIMENT REMOVAL FACILITY, OVER UNDISTURBED VEGETATED AREAS.
4. FAILURE TO CORRECTLY INSTALL E&S BMPS, FAILURE TO PREVENT SEDIMENT-LADEN RUNOFF FROM LEAVING THE EARTH DISTURBANCE ACTIVITY, OR FAILURE TO TAKE IMMEDIATE CORRECTIVE ACTION TO RESOLVE FAILURE OF E&S BMPS MAY RESULT IN ADMINISTRATIVE, CIVIL, AND/OR CRIMINAL PENALTIES BEING INSTITUTED BY THE DEPARTMENT AS DEFINED IN SECTION 602 OF THE PENNSYLVANIA CLEAN STREAMS LAW. THE CLEAN STREAMS LAW PROVIDES FOR UP TO $10,000 PER DAY IN CIVIL PENALTIES, UP TO $10,000 IN SUMMARY CRIMINAL PENALTIES, AND UP TO $25,000 IN MISDEMEANOR CRIMINAL PENALTIES FOR EACH VIOLATION.
5. ALL BUILDING MATERIALS AND WASTES SHALL BE REMOVED FROM THE SITE AND RECYCLED OR DISPOSED OF IN ACCORDANCE WITH THE DEPARTMENT'S SOLID WASTE MANAGEMENT REGULATIONS AT 25 PA. CODE 260.1 ET SEQ., 271.1., AND 287.1 ET SEQ. NO BUILDING MATERIALS OR WASTES OR UNUSED BUILDING MATERIALS SHALL BE BURNED, BURIED, DUMPED, OR DISCHARGED AT THE SITE.
6. THE CONTRACTOR WILL BE RESPONSIBLE FOR THE REMOVAL OF ANY EXCESS MATERIAL AND MAKE SURE THE SITE(S)RECEIVING THE EXCESS HAS AN APPROVED AND FULLY IMPLEMENTED EROSION AND SEDIMENT CONTROL PLAN THAT MEETS THE CONDITIONS OF CHAPTER 102 AND/OR OTHER STATE OR FEDERAL REGULATIONS.
7. CLEAN FILL IS DEFINED AS: UNCONTAMINATED, NON-WATER SOLUBLE, NON-DECOMPOSABLE, INERT, SOLID MATERIAL. THE TERM INCLUDES SOIL, ROCK, STONE, DREDGED MATERIAL, USED ASPHALT, AND BRICK, BLOCK OR CONCRETE FROM CONSTRUCTION AND DEMOLITION ACTIVITIES THAT IS SEPARATE FROM OTHER WASTE AND IS RECOGNIZABLE AS SUCH. THE TERM DOES NOT INCLUDE MATERIALS PLACED IN OR ON THE WATERS OF THE COMMONWEALTH UNLESS OTHERWISE AUTHORIZED. (THE TERM "USED ASPHALT" DOES NOT INCLUDE MILLED ASPHALT OR ASPHALT THAT HAS BEEN PROCESSED FOR RE-USE.).
8. ANY PLACEMENT OF CLEAN FILL THAT HAS BEEN AFFECTED BY A SPILL OR RELEASE OF A REGULATED SUBSTANCE MUST USE FORM FP-001 TO CERTIFY THE ORIGIN OF THE FILL MATERIAL AND THE RESULTS OF THE ANALYTICAL TESTING TO QUALIFY THE MATERIAL AS CLEAN FILL. FORM FP-001 MUST BE RETAINED BY THE OWNER OF THE PROPERTY RECEIVING THE FILL.
9. ENVIRONMENTAL DUE DILIGENCE MUST BE PERFORMED TO DETERMINE IF THE FILL MATERIALS ASSOCIATED WITH THE PROJECT QUALIFY AS CLEAN FILL. ENVIRONMENTAL DUE DILIGENCE IS DEFINED AS: INVESTIGATIVE TECHNIQUES, INCLUDING, BUT NOT LIMITED TO, VISUAL PROPERTY INSPECTIONS, ELECTRONIC DATA BASE SEARCHES, REVIEW OF PROPERTY OWNERSHIP, REVIEW OF PROPERTY USE HISTORY, SANBORN MAPS, ENVIRONMENTAL QUESTIONNAIRES, TRANSACTION SCREENS, ANALYTICAL TESTING, ENVIRONMENTAL ASSESSMENTS OR AUDITS. ANALYTICAL TESTING IS NOT A REQUIRED PART OF DUE DILIGENCE UNLESS VISUAL INSPECTION AND/OR REVIEW OF THE PAST LAND USE OF THE PROPERTY INDICATES THAT THE FILL MAY HAVE BEEN SUBJECTED TO A SPILL OR RELEASE OF A REGULATED SUBSTANCE. IF THE FILL MAY HAVE BEEN AFFECTED BY A SPILL OR RELEASE OF A REGULATED SUBSTANCE, IT MUST BE TESTED TO DETERMINE IF IT QUALIFIES AS CLEAN FILL. TESTING SHOULD BE PERFORMED IN ACCORDANCE WITH APPENDIX A OF THE DEPARTMENT'S POLICY "MANAGEMENT OF CLEAN FILL."

		LIMITATIONS (SEE "SOIL LIMITATIONS AND RESOLUTIONS" NOTES FOR RESOLUTIONS)									TYPICAL DEPTHS	
MAP SYMBOL	SOIL TYPE AND CHARACTERISTICS	CORROSIVE TO CONCRETE	CORROSIVE TO STEEL	DWELLINGS WITH BASEMENTS	DWELLINGS WITHOUT BASEMENTS	LAWNS, LANDSCAPING, AND GOLF FAIRWAYS	LOCAL ROADS AND STREETS	SHALLOW EXCAVATIONS	SMALL COMMERCIAL BUILDINGS	UNPAVED LOCAL ROADS AND STREETS	DEPTH TO WATER TABLE	DEPTH TO BEDROCK
GrB	GLENVILLE SILT LOAM, 3 TO 8 PERCENT SLOPES	MODERATE	HIGH	VERY LIMITED	SOMEWHAT LIMITED	SOMEWHAT LIMITED	VERY LIMITED	VERY LIMITED	SOMEWHAT LIMITED	VERY LIMITED	6" TO 36"	15" TO 30" TO FRAGIPAN 60" TO 99" TO PARALITHIC
CdB	CHESTER SILT LOAM, 3 TO 8 PERCENT SLOPES	HIGH	MODERATE	NOT LIMITED	NOT LIMITED	SOMEWHAT LIMITED	VERY LIMITED	SOMEWHAT LIMITED	SOMEWHAT LIMITED	VERY LIMITED	>80"	> 80"
UfB	UDORTHENTS, SCHIST AND GNEISS	MODERALTE	LOW	SOMEWHAT LIMITED	SOMEWHAT LIMITED	SOMEWHAT LIMITED	VERY LIMITED	SOMEWHAT LIMITED	SOMEWHAT LIMITED	SOMEWHAT LIMITED	60"	40" TO 72" TO PARALITHIC
UkB	URBAN LAND-CHESTER COMPLEX, 0-8% SLOPES	N/A	N/A	N/A	N/A	N/A	N/A	N/A	N/A	N/A	>80"	72" TO 99" TO PARALITHIC

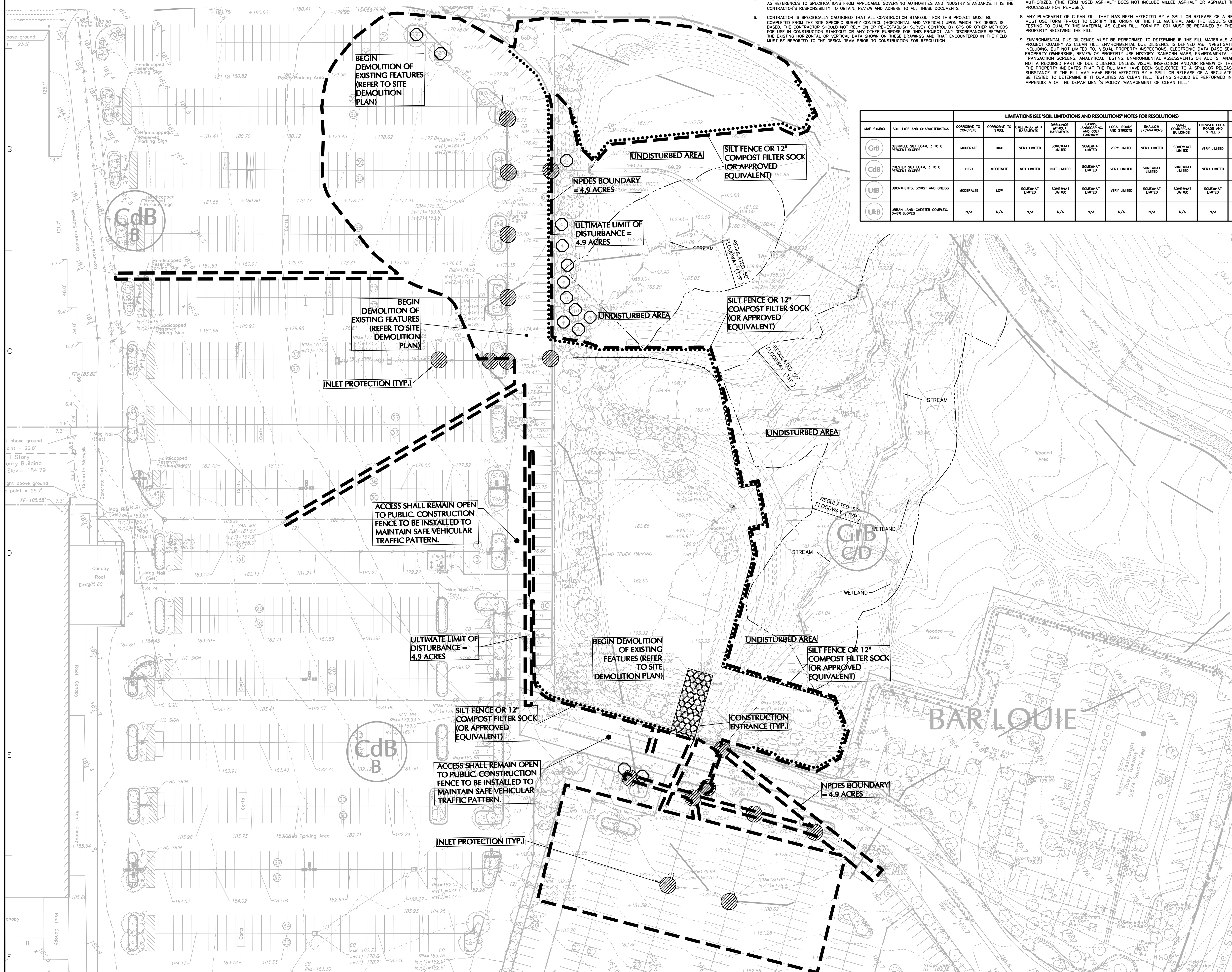

ACT 287 AS AMENDED

IT IS THE CONTRACTOR'S RESPONSIBILITY TO COMPLY WITH THE PENNSYLVANIA ACT 181 OF 2006 AND TO CONTACT THE "ONE CALL SYSTEM" THREE (3) WORKING DAYS (UNLESS OTHERWISE NOTED) PRIOR TO START OF CONSTRUCTION.

PENNSYLVANIA ONE CALL 1-800-242-1776
SERIAL NO. 20101102688

AQUA PENNSYLVANIA INC.
762 W LANCASTER AVE
BRYN MAWR, PA. 19010
(610) 562-1402

VERIZON PENNSYLVANIA
900 RACE STREET, 6TH FLOOR
PHILADELPHIA, PA 19107
(215) 351-8947

AT&T LOCAL SERVICES
2315 SALEM RD A10
CONYERS, GA. 33013
(770) 929-4584

COMCAST CABLE COMMUNICATIONS INC.
55 INDUSTRIAL DR
IVYLAND, PA. 18974
(215) 918-3137

PECO ENERGY COMPANY
400 PARK AVE
WARMINSTER, PA 18974
(215) 956-3121

BUCKS COUNTY WATER AND SEWER AUTHORITY
1275 ALMSHOUSE RD
WARRINGTON, PA 18976
(800) 222-2068

BENSALEM TOWNSHIP
3800 HULMEVILLE RD
BENSALEM, PA 19020
(215) 633-3733

REFER TO DETAIL SHEET CE-501 FOR EROSION & SEDIMENT CONTROL NOTES & DETAILS

IN AREAS OF EXCAVATION, ALL EXISTING UTILITIES TO REMAIN SHALL BE CHECKED FOR PROPER COVER AS REQUIRED BY THE UTILITY OWNER. SHOULD MINIMUM COVER NOT EXIST, THE CONTRACTOR SHALL BE RESPONSIBLE TO COORDINATE WITH SAID UTILITY COMPANY TO LOWER THE UTILITY TO PROVIDE PROPER COVER.

AFTER THE ENTIRE SITE IS STABILIZED, CONTRACTOR SHOULD ADJUST ALL GRADES, AND ALL PROPOSED AND EXISTING STORM DRAINAGE PIPES, TO MATCH WITH THOSE ON FINAL APPROVED SET OF PLANS (AS PER DRAWING CG-101).

THE EXISTING SUBGRADE OF THE SUBSURFACE AND SURFRACE STORMWATER MANAGEMENT INFILTRATION SYSTEMS SHALL NOT BE COMPACTED OR SUBJECT TO EXCESSIVE CONSTRUCTION EQUIPMENT. CONTRACTOR TO USE LIGHTWEIGHT CONSTRUCTION EQUIPMENT AND OPERATE MACHINERY FROM OUTSIDE THE FOOTPRINT OF THE SUBSURFACE BASIN WHENEVER POSSIBLE. SEE CG-101, CG-102, CE-102, CE-103, AND CE-104 FOR LIMITS OF BASIN.

BUILDING PAD SUBGRADE ELEVATIONS SHOWN ARE APPROXIMATE AND REPRESENT A 6" STONE BASE AND A 6" FLOOR SLAB. ACTUAL SUBGRADE ELEVATIONS SHOULD BE CONFIRMED WITH PROJECT ARCHITECT AND GEOTECHNICAL REPORT.

LEGEND

- PROPERTY LINE
- COMPOST FILTER SOCK
- CONST. FENCE
- LIMIT OF DISTURBANCE
- NPDES PERMIT BOUNDARY
- EXISTING WATER LINE
- PROPOSED WATER LINE
- EXISTING SAN SEWER
- PROPOSED SAN SEWER
- EXISTING STORM SEWER
- EXISTING ELECTRIC
- EXISTING TELEPHONE
- EXISTING GAS
- EXISTING CONTOUR
- PROPOSED CONTOUR
- CONSTRUCTION ENTRANCE
- INLET PROTECTION
- SOIL TYPE
- SOIL BOUNDARY LINE
- PROPOSED STORM PIPE
- PROPOSED STORM INLET
- PROPOSED STORM MANHOLE
- DRAINAGE BOUNDARY
- MILLINGS STOCKPILE

PENNSYLVANIA ONE CALL SYSTEM, INC. 1-800-242-1776 STOP - CALL BEFORE YOU DIG!

CALL BEFORE YOU DIG IN PA, TOLL FREE 1 - 800 - 242-1776
FOR FREE MARKOUTS TO LOCATE UNDERGROUND UTILITIES
" IT'S THE LAW "

MAINTENANCE PROGRAM

1. UNTIL THE SITE IS STABILIZED, ALL EROSION AND SEDIMENT CONTROL BMPS MUST BE MAINTAINED PROPERLY. MAINTENANCE MUST INCLUDE INSPECTIONS OF ALL EROSION AND SEDIMENT CONTROL BMPS AFTER EACH RUNOFF EVENT AND ON A WEEKLY BASIS. ALL PREVENTATIVE AND REMEDIAL MAINTENANCE WORK, INCLUDING CLEANOUT, REPAIR, REPLACEMENT, RE-GRADING, RESEEDING, RE-MULCHING AND RE-NETTING MUST BE PERFORMED IMMEDIATELY. IF EROSION AND SEDIMENT CONTROL BMPS FAIL TO PERFORM AS EXPECTED, REPLACEMENT BMPS OR MODIFICATIONS OF THOSE INSTALLED WILL BE REQUIRED.
2. ANY SEDIMENT REMOVED FROM BMPS DURING CONSTRUCTION WILL BE RETURNED TO UPLAND AREAS ON SITE AND INCORPORATED INTO THE SITE GRADING.
3. A LOG SHOWING THE DATES THAT E&S BMPS WERE INSPECTED AS WELL AS ANY DEFICIENCIES FOUND AND THE DATE THAT THEY WERE CORRECTED SHALL BE MAINTAINED ON THE SITE AND BE MADE AVAILABLE TO THE BUCKS COUNTY CONSERVATION DISTRICT OR OTHER REGULATORY AGENCY OFFICIALS AT THE TIME OF INSPECTION.

LOCATION MAP

1"=2000'

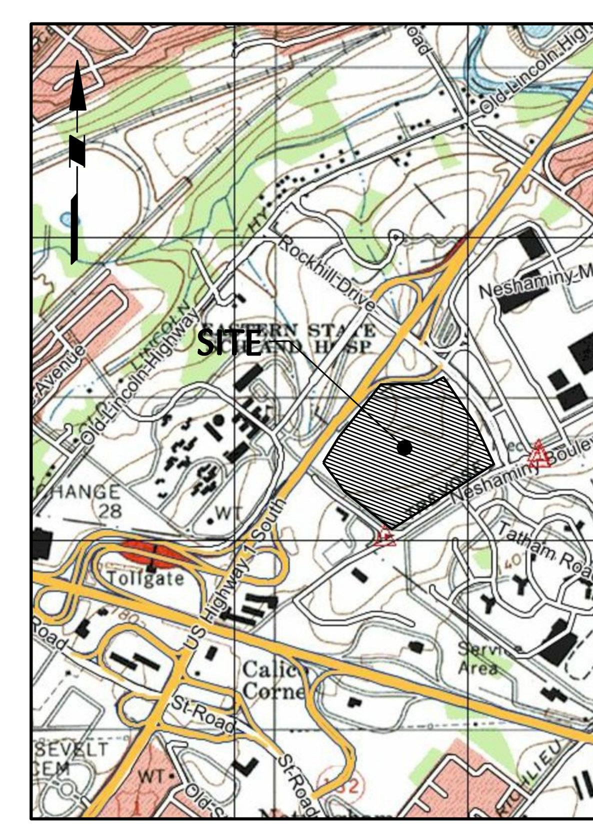

USGS MAP

1"=1500'

50 0 25 50
SCALE IN FEET

8/8/2016	REVISIONS PER TOWNSHIP AND COUNTY COMMENTS	1.
Date	Description	No.

REVISIONS

BRIAN M. CONLON — DATE
PROFESSIONAL ENGINEER
PA Lic. No. PE061782

LANGAN
30 South 17th Street, Suite 1300, Philadelphia, PA 19103
T: 215.864.0640 F: 215.864.0671 www.langan.com
NEW JERSEY NEW YORK CONNECTICUT PENNSYLVANIA OHIO VIRGINIA WASHINGTON DC FLORIDA NORTH DAKOTA CALIFORNIA
ABU DHABI ATHENS DOHA DUBAI ISTANBUL
Langan Engineering, Environmental, Surveying and Landscape Architecture, D.P.C.
Langan Engineering and Environmental Services, Inc.
Langan CT, Inc.
Langan International LLC
Collectively known as Langan

Project
THE MARKETPLACE AT NESHAMINY
BENSALEM TOWNSHIP
BUCKS COUNTY — PENNSYLVANIA

Drawing Title
SOIL EROSION AND SEDIMENT CONTROL PLAN - STAGE I

Project No. 220048102	Drawing No.
Date 24 JUNE 2016	CE-101
Scale 1"=50'	
Drawn By TFH	
Checked By BMC	SHEET 20 OF 29

© 2014 Langan

Filename: \\langan.com\data\PH\data1\220048102\Cadd Data - 220048102\SheetFiles\2016.08.08 - NPDES Revised Submission\220048102-CE-101.dwg Date: 8/15/2016 Time: 09:27 User: ddonchez Style Table: Langan.stb Layout: Ce-101

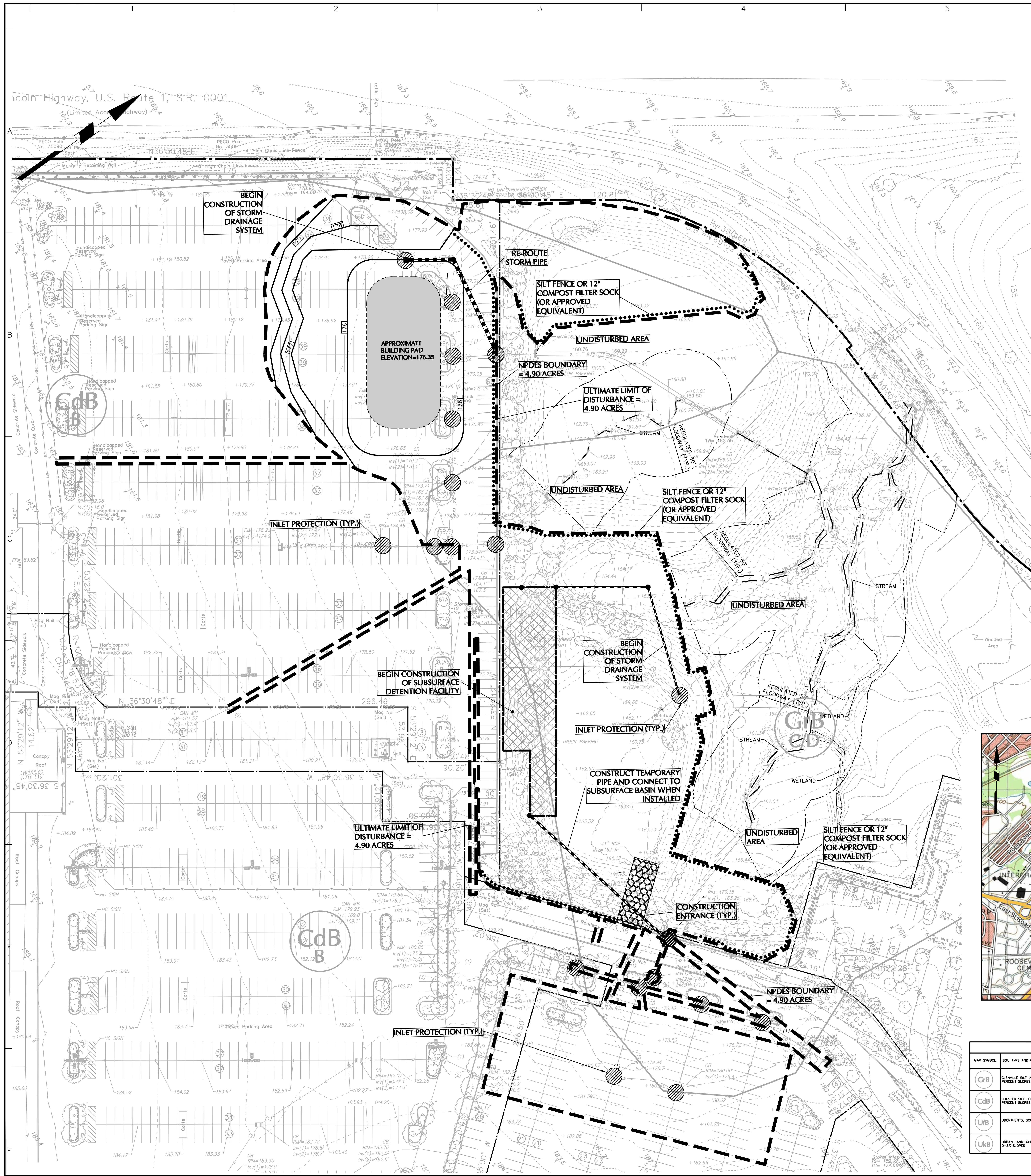

GENERAL E&S NOTES

1. A COPY OF THE APPROVED EROSION AND SEDIMENT CONTROL PLAN MUST BE AVAILABLE AT THE PROJECT SITE AT ALL TIMES. THE BUCKS COUNTY CONSERVATION DISTRICT SHALL BE NOTIFIED OF ANY CHANGES TO THE APPROVED PLAN PRIOR TO IMPLEMENTATION OF THOSE CHANGES. THE DISTRICT MAY REQUIRE A WRITTEN SUBMITTAL OF THOSE CHANGES FOR REVIEW AND APPROVAL AT ITS DISCRETION.
2. IMMEDIATELY UPON DISCOVERING UNFORESEEN CIRCUMSTANCES POSING THE POTENTIAL FOR ACCELERATED EROSION AND/OR SEDIMENT POLLUTION, THE OPERATOR SHALL IMPLEMENT APPROPRIATE BEST MANAGEMENT PRACTICES TO MINIMIZE THE POTENTIAL FOR ACCELERATED EROSION AND/OR SEDIMENT POLLUTION AND NOTIFY THE BUCKS COUNTY CONSERVATION DISTRICT.
3. ALL PUMPING OF SEDIMENT LADEN WATER SHALL BE THROUGH A SEDIMENT CONTROL BMP, SUCH AS A PUMPED WATER FILTER BAG OR EQUIVALENT SEDIMENT REMOVAL FACILITY, OVER UNDISTURBED VEGETATED AREAS.
4. FAILURE TO CORRECTLY INSTALL E&S BMPS, FAILURE TO PREVENT SEDIMENT-LADEN RUNOFF FROM LEAVING THE EARTH DISTURBANCE ACTIVITY, OR FAILURE TO TAKE IMMEDIATE CORRECTIVE ACTION TO RESOLVE FAILURE OF E&S BMPS MAY RESULT IN ADMINISTRATIVE, CIVIL, AND/OR CRIMINAL PENALTIES BEING INSTITUTED BY THE DEPARTMENT AS DEFINED IN SECTION 602 OF THE PENNSYLVANIA CLEAN STREAMS LAW. THE CLEAN STREAMS LAW PROVIDES FOR UP TO $10,000 PER DAY IN CIVIL PENALTIES, UP TO $10,000 IN SUMMARY CRIMINAL PENALTIES, AND UP TO $25,000 IN MISDEMEANOR CRIMINAL PENALTIES FOR EACH VIOLATION.
5. ALL BUILDING MATERIALS AND WASTES SHALL BE REMOVED FROM THE SITE AND RECYCLED OR DISPOSED OF IN ACCORDANCE WITH THE DEPARTMENT'S SOLID WASTE MANAGEMENT REGULATIONS AT 25 PA. CODE 260.1 ET SEQ., 271.1., AND 287.1 ET SEQ. NO BUILDING MATERIALS OR WASTES OR UNUSED BUILDING MATERIALS SHALL BE BURNED, BURIED, DUMPED, OR DISCHARGED AT THE SITE.
6. THE CONTRACTOR WILL BE RESPONSIBLE FOR THE REMOVAL OF ANY EXCESS MATERIAL AND MAKE SURE THE SITE(S)RECEIVING THE EXCESS HAS AN APPROVED AND FULLY IMPLEMENTED EROSION AND SEDIMENT CONTROL PLAN THAT MEETS THE CONDITIONS OF CHAPTER 102 AND/OR OTHER STATE OR FEDERAL REGULATIONS.
7. CLEAN FILL IS DEFINED AS: UNCONTAMINATED, NON-WATER SOLUBLE, NON-DECOMPOSABLE, INERT, SOLID MATERIAL. THE TERM INCLUDES SOIL, ROCK, STONE, DREDGED MATERIAL, USED ASPHALT, AND BRICK, BLOCK OR CONCRETE FROM CONSTRUCTION AND DEMOLITION ACTIVITIES THAT IS SEPARATE FROM OTHER WASTE AND IS RECOGNIZABLE AS SUCH. THE TERM DOES NOT INCLUDE MATERIALS PLACED IN OR ON THE WATERS OF THE COMMONWEALTH UNLESS OTHERWISE AUTHORIZED. (THE TERM "USED ASPHALT" DOES NOT INCLUDE MILLED ASPHALT OR ASPHALT THAT HAS BEEN PROCESSED FOR RE-USE.).
8. ANY PLACEMENT OF CLEAN FILL THAT HAS BEEN AFFECTED BY A SPILL OR RELEASE OF A REGULATED SUBSTANCE MUST USE FORM FP-001 TO CERTIFY THE ORIGIN OF THE FILL MATERIAL AND THE RESULTS OF THE ANALYTICAL TESTING TO QUALIFY THE MATERIAL AS CLEAN FILL. FORM FP-001 MUST BE RETAINED BY THE OWNER OF THE PROPERTY RECEIVING THE FILL.
9. ENVIRONMENTAL DUE DILIGENCE MUST BE PERFORMED TO DETERMINE IF THE FILL MATERIALS ASSOCIATED WITH THE PROJECT QUALIFY AS CLEAN FILL. ENVIRONMENTAL DUE DILIGENCE IS DEFINED AS: INVESTIGATIVE TECHNIQUES, INCLUDING, BUT NOT LIMITED TO, VISUAL PROPERTY INSPECTIONS, ELECTRONIC DATA BASE SEARCHES, REVIEW OF PROPERTY OWNERSHIP, REVIEW OF PROPERTY USE HISTORY, SANBORN MAPS, ENVIRONMENTAL QUESTIONNAIRES, TRANSACTION SCREENS, ANALYTICAL TESTING, ENVIRONMENTAL ASSESSMENTS OR AUDITS. ANALYTICAL TESTING IS NOT A REQUIRED PART OF DUE DILIGENCE UNLESS VISUAL INSPECTION AND/OR REVIEW OF THE PAST LAND USE OF THE PROPERTY INDICATES THAT THE FILL MAY HAVE BEEN SUBJECTED TO A SPILL OR RELEASE OF A REGULATED SUBSTANCE.
IF THE FILL MAY HAVE BEEN AFFECTED BY A SPILL OR RELEASE OF A REGULATED SUBSTANCE, IT MUST BE TESTED TO DETERMINE IF IT QUALIFIES AS CLEAN FILL. TESTING SHOULD BE PERFORMED IN ACCORDANCE WITH APPENDIX A OF THE DEPARTMENT'S POLICY "MANAGEMENT OF CLEAN FILL."

GENERAL SITE NOTES:

1. THE CONTRACTOR SHALL FURNISH, INSTALL, TEST AND COMPLETE ALL WORK TO THE SATISFACTION OF THE ENGINEER AND OWNER IN ACCORDANCE WITH THE CONTRACT DOCUMENTS. THE CONTRACTOR IS SOLELY RESPONSIBLE FOR MEANS AND METHODS OF CONSTRUCTION; AS SUCH, THESE PLANS DO NOT COMPLETELY REPRESENT, NOR ARE THEY INTENDED TO REPRESENT, ALL SPECIFIC INSTRUCTIONS REQUIRED FOR SITEWORK CONSTRUCTION. THE CONTRACTOR IS RESPONSIBLE TO CONSTRUCT ALL IMPROVEMENTS DEPICTED ON THESE PLANS IN ACCORDANCE WITH ALL APPLICABLE RULES, REGULATIONS AND LAWS IN EFFECT AT THE TIME OF CONSTRUCTION.
2. THE CONTRACTOR SHALL ACCEPT THE SITE AS IS. THE CONTRACTOR SHALL ASSESS CONDITIONS, AND THE KIND, QUALITY AND QUANTITY OF WORK REQUIRED. THE OWNER AND ENGINEER MAKE NO GUARANTEE IN REGARD TO THE ACCURACY OF ANY INFORMATION THAT WAS OBTAINED DURING INVESTIGATIONS. THE CONTRACTOR SHALL: MAKE A THOROUGH SITE INSPECTION IN ORDER TO FIELD CHECK EXISTING SITE CONDITIONS; CORRELATE CONDITIONS WITH THE DRAWINGS; AND, RESOLVE ANY POSSIBLE CONSTRUCTION CONFLICTS WITH THE OWNER AND ENGINEER PRIOR TO COMMENCEMENT OF WORK. THE CONTRACTOR SHALL PERFORM ADDITIONAL TOPOGRAPHIC SURVEYS HE/SHE DEEMS NECESSARY, PROVIDED THEY ARE COORDINATED WITH THE OWNER. ANY CONDITIONS DETERMINED BY THE CONTRACTOR THAT DIFFER FROM THE INFORMATION SHOWN ON THE DRAWINGS THAT ARE NOT BROUGHT TO THE ATTENTION OF THE OWNER AND ENGINEER PRIOR TO THE START OF WORK SHALL NOT BE CONSIDERED GROUNDS FOR ADDITIONAL PAYMENT OR CHANGES TO THE CONTRACT DURATION, OR ANY OTHER CLAIMS AGAINST THE OWNER OR OWNER'S ENGINEER.
3. THE CONTRACTOR SHALL, WHEN HE/SHE DEEMS NECESSARY, PROVIDE A WRITTEN REQUEST FOR INFORMATION (RFI) TO THE OWNER AND/OR OWNER'S DESIGNATED REPRESENTATIVE, AND ENGINEER PRIOR TO THE CONSTRUCTION OF ANY SPECIFIC SITEWORK ITEM. THE (RFI) SHALL BE IN A FORM ACCEPTABLE TO OWNER AND/OR OWNER'S DESIGNATED REPRESENTATIVE, AND ENGINEER AND SHALL ALLOW FOR A MINIMUM OF THREE WORK DAYS FOR A WRITTEN REPLY. RFIS SHALL BE NUMBERED CONSECUTIVELY BY DATE SUBMITTED. THE CONTRACTOR SHALL BE SOLELY RESPONSIBLE FOR SITEWORK ITEMS CONSTRUCTED DIFFERENTLY THAN INTENDED OR AS DEPICTED ON THE PLANS.
4. INFORMATION RELATED TO ELEVATIONS AND PROPOSED UTILITIES (SUCH AS ROADWAY GRADES, INVERT ELEVATIONS, RIM ELEVATIONS, GRATE ELEVATIONS, BUILDING FINISHED FLOOR ELEVATIONS, ETC.) MAY BE FOUND IN MORE THAN ONE LOCATION IN THE CONTRACT DOCUMENTS. THE CONTRACTOR SHALL SUFFICIENTLY REVIEW ALL PLANS, PROFILES AND ANY OTHER INFORMATION IN THE CONTRACT DOCUMENTS FOR CONSISTENCY PRIOR TO BID. ANY INCONSISTENCIES OR DISCREPANCIES THAT ARE FOUND BY THE CONTRACTOR OR HIS ASSIGNS SHALL BE IMMEDIATELY BROUGHT TO THE ATTENTION OF THE OWNER AND ENGINEER IN WRITING, IN THE FORMAT OF AN RFI PRIOR TO BID.
5. THERE ARE ADDITIONAL NOTES, SPECIFICATIONS AND REQUIREMENTS CONTAINED THROUGHOUT THE PLAN SET AS WELL AS REFERENCES TO SPECIFICATIONS FROM APPLICABLE GOVERNING AUTHORITIES AND INDUSTRY STANDARDS. IT IS THE CONTRACTOR'S RESPONSIBILITY TO OBTAIN, REVIEW AND ADHERE TO ALL THESE DOCUMENTS.
6. CONTRACTOR IS SPECIFICALLY CAUTIONED THAT ALL CONSTRUCTION STAKEOUT FOR THIS PROJECT MUST BE COMPLETED FROM THE SITE SPECIFIC SURVEY CONTROL (HORIZONTAL AND VERTICAL) UPON WHICH THE DESIGN IS BASED. THE CONTRACTOR SHOULD NOT RELY ON OR RE-ESTABLISH SURVEY CONTROL BY GPS OR OTHER METHODS FOR USE IN CONSTRUCTION STAKEOUT OR ANY OTHER PURPOSE FOR THIS PROJECT. ANY DISCREPANCIES BETWEEN THE EXISTING HORIZONTAL OR VERTICAL DATA SHOWN ON THESE DRAWINGS AND THAT ENCOUNTERED IN THE FIELD MUST BE REPORTED TO THE DESIGN TEAM PRIOR TO CONSTRUCTION FOR RESOLUTION.

BUILDING PAD SUBGRADE ELEVATIONS SHOWN ARE APPROXIMATE AND REPRESENT A 6" STONE BASE AND A 6" FLOOR SLAB. ACTUAL SUBGRADE ELEVATIONS SHOULD BE CONFIRMED WITH PROJECT ARCHITECT AND GEOTECHNICAL REPORT.

AFTER THE ENTIRE SITE IS STABILIZED, CONTRACTOR SHOULD ADJUST ALL GRADES, AND ALL PROPOSED AND EXISTING STORM DRAINAGE PIPES, TO MATCH WITH THOSE ON FINAL APPROVED SET OF PLANS (AS PER DRAWING CG-101).

IN AREAS OF EXCAVATION, ALL EXISTING UTILITIES TO REMAIN SHALL BE CHECKED FOR PROPER COVER AS REQUIRED BY THE UTILITY OWNER. SHOULD MINIMUM COVER NOT EXIST, THE CONTRACTOR SHALL BE RESPONSIBLE TO COORDINATE WITH SAID UTILITY COMPANY TO LOWER THE UTILITY TO PROVIDE PROPER COVER.

REFER TO DETAIL SHEET CE-501 FOR EROSION & SEDIMENT CONTROL NOTES & DETAILS

REFER TO DETAIL SHEET CE-501 FOR EROSION & SEDIMENT CONTROL NOTES & DETAILS

ACT 287 AS AMENDED

IT IS THE CONTRACTOR'S RESPONSIBILITY TO COMPLY WITH THE PENNSYLVANIA ACT 181 OF 2006 AND TO CONTACT THE "ONE CALL SYSTEM" THREE (3) WORKING DAYS (UNLESS OTHERWISE NOTED) PRIOR TO START OF CONSTRUCTION.

PENNSYLVANIA ONE CALL 1-800-242-1776
SERIAL NO. 20101102688

AQUA PENNSYLVANIA INC.
762 W LANCASTER AVE
BRYN MAWR, PA. 19010
(610) 562-1402

VERIZON PENNSYLVANIA
900 RACE STREET, 6TH FLOOR
PHILADELPHIA, PA 19107
(215) 351-8947

AT&T LOCAL SERVICES
2315 SALEM RD A10
CONYERS, GA. 33013
(770) 929-4584

COMCAST CABLE COMMUNICATIONS INC.
55 INDUSTRIAL DR
IVYLAND, PA. 18974
(215) 918-3137

PECO ENERGY COMPANY
400 PARK AVE
WARMINSTER, PA 18974
(215) 956-3121

BUCKS COUNTY WATER AND SEWER AUTHORITY
1275 ALMSHOUSE RD
WARRINGTON, PA 18976
(800) 222-2068

BENSALEM TOWNSHIP
3800 HULMEVILLE RD
BENSALEM, PA 19020
(215) 633-3733

MAINTENANCE PROGRAM

1. UNTIL THE SITE IS STABILIZED, ALL EROSION AND SEDIMENT CONTROL BMPS MUST BE MAINTAINED PROPERLY. MAINTENANCE MUST INCLUDE INSPECTIONS OF ALL EROSION AND SEDIMENT CONTROL BMPS AFTER EACH RUNOFF EVENT AND ON A WEEKLY BASIS. ALL PREVENTATIVE AND REMEDIAL MAINTENANCE WORK, INCLUDING CLEANOUT, REPAIR, REPLACEMENT, RE-GRADING, RESEEDING, RE-MULCHING AND RE-NETTING MUST BE PERFORMED IMMEDIATELY. IF EROSION AND SEDIMENT CONTROL BMPS FAIL TO PERFORM AS EXPECTED, REPLACEMENT BMPS OR MODIFICATIONS OF THOSE INSTALLED WILL BE REQUIRED.
2. ANY SEDIMENT REMOVED FROM BMPS DURING CONSTRUCTION WILL BE RETURNED TO UPLAND AREAS ON SITE AND INCORPORATED INTO THE SITE GRADING.
3. A LOG SHOWING THE DATES THAT E&S BMPS WERE INSPECTED AS WELL AS ANY DEFICIENCIES FOUND AND THE DATE THAT THEY WERE CORRECTED SHALL BE MAINTAINED ON THE SITE AND BE MADE AVAILABLE TO THE BUCKS COUNTY CONSERVATION DISTRICT OR OTHER REGULATORY AGENCY OFFICIALS AT THE TIME OF INSPECTION.

CONSTRUCTION SEQUENCE - STAGE II:

1. ALL EARTH DISTURBANCE ACTIVITIES SHALL PROCEED IN ACCORDANCE WITH THE FOLLOWING SEQUENCE. EACH STAGE SHALL BE COMPLETED AND IMMEDIATELY STABILIZED BEFORE ANY FOLLOWING STAGE IS INITIATED. CLEARING, GRUBBING AND TOPSOIL STRIPPING SHALL BE LIMITED TO THOSE AREAS DESCRIBED IN EACH STAGE.
2. AT LEAST 7 DAYS BEFORE STARTING ANY EARTH DISTURBANCE ACTIVITIES, INCLUDING CLEARING AND GRUBBING, THE OWNER AND/OR OPERATOR SHALL INVITE ALL CONTRACTORS, THE LANDOWNER, ALL APPROPRIATE MUNICIPAL OFFICIALS, THE E&S PLAN PREPARER, THE PCSM PLAN PREPARER, THE LICENSED PROFESSIONAL RESPONSIBLE FOR OVERSIGHT OF CRITICAL STAGES OF IMPLEMENTATION OF THE PCSM PLAN, AND A REPRESENTATIVE OF THE BUCKS COUNTY CONSERVATION DISTRICT TO AN ON-SITE PRE-CONSTRUCTION MEETING.
3. AT LEAST 3 DAYS BEFORE STARTING ANY EARTH DISTURBANCE ACTIVITIES, ALL CONTRACTORS INVOLVED IN THOSE ACTIVITIES SHALL NOTIFY THE PENNSYLVANIA ONE CALL SYSTEM INCORPORATED AT 1-800-242-1776 FOR THE LOCATION OF EXISTING UNDERGROUND UTILITIES.
4. BEGIN CONSTRUCTION OF SUBSURFACE DETENTION SYSTEM IN BASIN 1. BASIN SHALL BE COMPLETED AND TEMPORARY PIPE INSTALLED TO CONNECT DRAINAGE PRIOR TO FILLING IN THE BASIN.
5. FOR THE TARGET PARKING LOT PAD, WORK CAN BEGIN. ROUGH GRADE SOIL IN BUILDING PAD, PARKING, AND DRIVEWAY AREAS TO SUBGRADE ELEVATIONS. THE ELEVATIONS SHOWN REPRESENT APPROXIMATE SUBGRADE ELEVATIONS. REFER TO THE GEOTECHNICAL REPORT.
6. UPON COMPLETION OF THE SUBSURFACE INFILTRATION SYSTEM, AVOID EXCESS COMPACTION USING SUITABLE EQUIPMENT.
7. INSTALLATION OF UTILITIES MAY COMMENCE AT THIS STAGE IF PREFERRED BY THE CONTRACTOR. TRENCH EXCAVATION SHALL BE LIMITED TO THE LENGTH OF PIPE THAT CAN BE COMPLETED IN ONE DAY.
8. WHEN NO WORK IS TO BE PERFORMED ON ANY AREA, IT SHALL BE PROTECTED IMMEDIATELY BY TEMPORARY SEEDING, MULCHING OR SODDING.
9. REFER TO DRAWINGS FOR SOIL EROSION AND SEDIMENT CONTROL MAINTENANCE PROGRAM.
10. CONTRACTOR MUST PERIODICALLY WET-DOWN EXPOSED SOILS OR BARE GROUND TO PREVENT THE WIND FROM BLOWING DUST PARTICLES FROM THE CONSTRUCTION SITE TO NEIGHBORING AREAS.
11. INSTALL THE NECESSARY UNDERGROUND UTILITIES AS FOLLOWS:
    a. LIMIT DAILY TRENCH EXCAVATION TO THE LENGTH OF PIPE WHICH CAN BE COMPLETED THE SAME DAY.
    b. WATER THAT ACCUMULATES IN THE OPEN TRENCH WILL BE COMPLETELY REMOVED BY PUMPING USING A SEDIMENT FILTER BAG BEFORE PIPE PLACEMENT AND/OR BACKFILLING BEGINS.
    c. ALL PROPOSED INLETS INSTALLED THAT MAY POTENTIALLY RECEIVE SEDIMENT-LADEN RUNOFF FROM DISTURBED AREAS DURING THE CONSTRUCTION PERIOD, MUST BE PROTECTED WITH INLET PROTECTION.

THE EXISTING SUBGRADE OF THE SUBSURFACE AND SURFRACE STORMWATER MANAGEMENT INFILTRATION SYSTEMS SHALL NOT BE COMPACTED OR SUBJECT TO EXCESSIVE CONSTRUCTION EQUIPMENT. CONTRACTOR TO USE LIGHTWEIGHT CONSTRUCTION EQUIPMENT AND OPERATE MACHINERY FROM OUTSIDE THE FOOTPRINT OF THE SUBSURFACE BASIN WHENEVER POSSIBLE. SEE CG-101, CG-102, CE-102, CE-103, AND CE-104 FOR LIMITS OF BASIN.

LEGEND

PROPERTY LINE
COMPOST FILTER SOCK
CONST. FENCE
LIMIT OF DISTURBANCE
NPDES PERMIT BOUNDARY
EXISTING WATER LINE
PROPOSED WATER LINE
EXISTING SAN SEWER
PROPOSED SAN SEWER
EXISTING STORM SEWER
EXISTING ELECTRIC
EXISTING TELEPHONE
EXISTING GAS
EXISTING CONTOUR
PROPOSED CONTOUR
CONSTRUCTION ENTRANCE
INLET PROTECTION
SOIL TYPE
SOIL BOUNDARY LINE
PROPOSED STORM PIPE
PROPOSED STORM INLET
PROPOSED STORM MANHOLE
DRAINAGE BOUNDARY

PENNSYLVANIA ONE CALL SYSTEM, INC. 1-800-242-1776 STOP - CALL BEFORE YOU DIG!

CALL BEFORE YOU DIG IN PA, TOLL FREE 1 - 800 - 242-1776
FOR FREE MARKOUTS TO LOCATE UNDERGROUND UTILITIES
" IT'S THE LAW "

BUILDING PAD SUBGRADE ELEVATIONS SHOWN ARE APPROXIMATE AND REPRESENT A 6" STONE BASE AND A 6" FLOOR SLAV. ACTUAL SUBGRADE ELEVATIONS SHOULD BE CONFIRMED WITH PROJECT ARCHITECT AND GEOTECHNICAL REPORT.

THE EXISTING SUBGRADE FOR THE STORMWATER MANAGEMENT SYSTEM SHALL NOT BE CONPACTED OR SUBJECT TO EXCESSIVE CONSTRUCTION EQUIPMENT. CONTRACTOR TO USE LIGHTWEIGHT CONSTRUCTION EQUIPMENT AND OPERATE MACHINERY FROM OUTSIDE THE BASIN WHENEVER POSSIBLE.

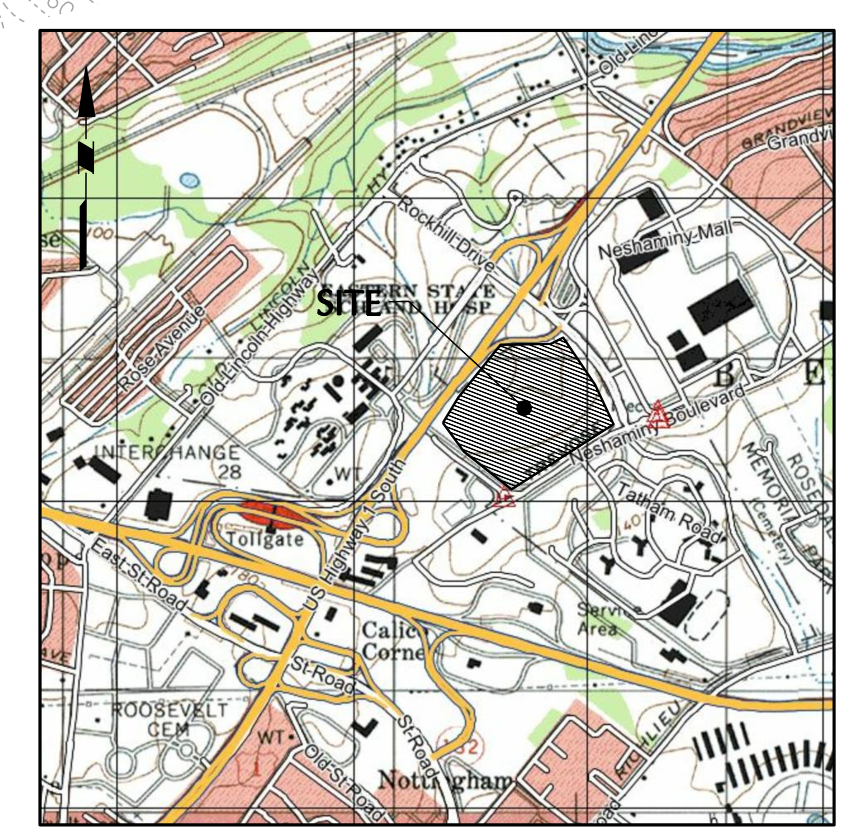

USGS MAP
1"=1500'

		LIMITATIONS (SEE "SOIL LIMITATIONS AND RESOLUTIONS" NOTES FOR RESOLUTIONS)									TYPICAL DEPTHS	
MAP SYMBOL	SOIL TYPE AND CHARACTERISTICS	CORROSIVE TO CONCRETE	CORROSIVE TO STEEL	DWELLINGS WITH BASEMENTS	DWELLINGS WITHOUT BASEMENTS	LAWNS, LANDSCAPING, AND GOLF FAIRWAYS	LOCAL ROADS AND STREETS	SHALLOW EXCAVATIONS	SMALL COMMERCIAL BUILDINGS	UNPAVED LOCAL ROADS AND STREETS	DEPTH TO WATER TABLE	DEPTH TO BEDROCK
GrB	GLENVILLE SILT LOAM, 3 TO 8 PERCENT SLOPES	MODERATE	HIGH	VERY LIMITED	SOMEWHAT LIMITED	SOMEWHAT LIMITED	VERY LIMITED	VERY LIMITED	SOMEWHAT LIMITED	VERY LIMITED	6" TO 36"	15" TO 30" TO FRAGIPAN 60" TO 99" TO PARALITHIC
CdB	CHESTER SILT LOAM, 3 TO 8 PERCENT SLOPES	HIGH	MODERATE	NOT LIMITED	NOT LIMITED	SOMEWHAT LIMITED	VERY LIMITED	SOMEWHAT LIMITED	SOMEWHAT LIMITED	VERY LIMITED	>80"	> 80"
UfB	UDORTHENTS, SCHIST AND GNEISS	MODERALTE	LOW	SOMEWHAT LIMITED	SOMEWHAT LIMITED	SOMEWHAT LIMITED	VERY LIMITED	SOMEWHAT LIMITED	SOMEWHAT LIMITED	SOMEWHAT LIMITED	60"	40" TO 72" TO PARALITHIC
UkB	URBAN LAND-CHESTER COMPLEX, 0-8% SLOPES	N/A	N/A	N/A	N/A	N/A	N/A	N/A	N/A	N/A	>80"	72" TO 99" TO PARALITHIC

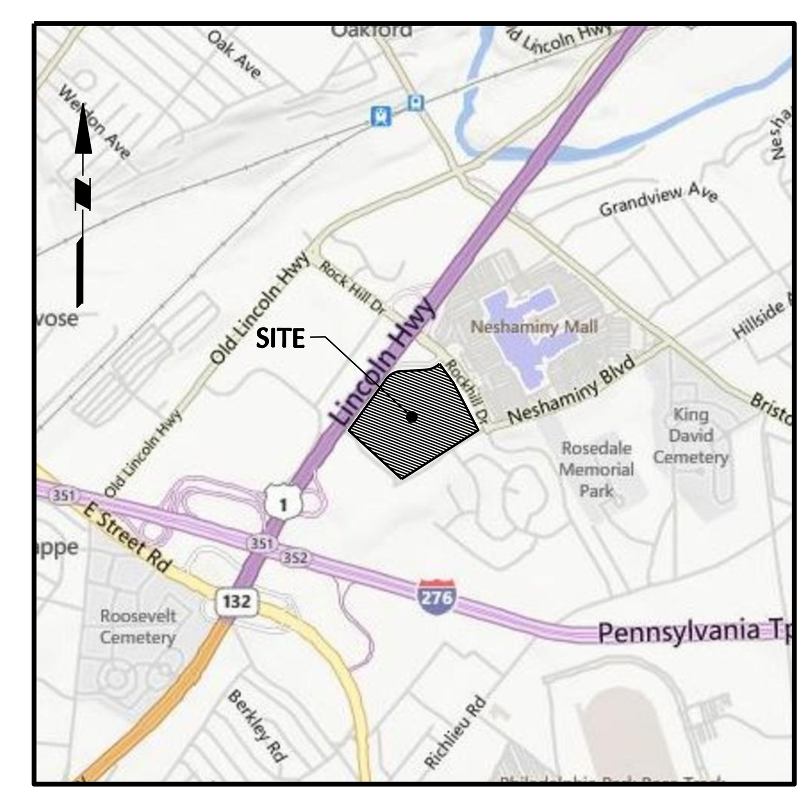

LOCATION MAP
1"=2000'

50 0 25 50
SCALE IN FEET

Date	Description	No.
8/8/2016	REVISIONS PER TOWNSHIP AND COUNTY COMMENTS	1.

REVISIONS

BRIAN M. CONLON — DATE
PROFESSIONAL ENGINEER
PA Lic. No. PE061782

LANGAN
30 South 17th Street, Suite 1300, Philadelphia, PA 19103
T: 215.864.0640 F: 215.864.0671 www.langan.com
NEW JERSEY NEW YORK CONNECTICUT PENNSYLVANIA OHIO
VIRGINIA WASHINGTON DC FLORIDA NORTH DAKOTA CALIFORNIA
ABU DHABI ATHENS DOHA DUBAI ISTANBUL

Langan Engineering, Environmental, Surveying and Landscape Architecture, D.P.C.
Langan Engineering and Environmental Services, Inc.
Langan CT, Inc.
Langan International LLC
Collectively known as Langan

Project
THE MARKETPLACE AT NESHAMINY
BENSALEM TOWNSHIP
BUCKS COUNTY — PENNSYLVANIA

Drawing Title
SOIL EROSION AND SEDIMENT CONTROL PLAN - STAGE II

Project No. 220048102
Date 24 JUNE 2016
Scale 1"=50'
Drawn By TFH
Checked By BMC
Drawing No. CE-102
SHEET 21 OF 29

© 2014 Langan

Filename: \\langan.com\data\PH\data1\220048102\Cadd Data - 220048102\SheetFiles\2016.08.08 - NPDES Revised Submission\220048102-CE-102.dwg Date: 8/15/2016 Time: 09:29 User: ddonchez Style Table: Langan.stb Layout: Ce-102

BUILDING PAD SUBGRADE ELEVATIONS SHOWN ARE APPROXIMATE AND REPRESENT A 6" STONE BASE AND A 6" FLOOR SLAB. ACTUAL SUBGRADE ELEVATIONS SHOULD BE CONFIRMED WITH PROJECT ARCHITECT AND GEOTECHNICAL REPORT.

IN AREAS OF EXCAVATION, ALL EXISTING UTILITIES TO REMAIN SHALL BE CHECKED FOR PROPER COVER AS REQUIRED BY THE UTILITY OWNER. SHOULD MINIMUM COVER NOT EXIST, THE CONTRACTOR SHALL BE RESPONSIBLE TO COORDINATE WITH SAID UTILITY COMPANY TO LOWER THE UTILITY TO PROVIDE PROPER COVER.

REFER TO DETAIL SHEET CE-501 FOR EROSION & SEDIMENT CONTROL NOTES & DETAILS

REFER TO DETAIL SHEET CE-501 FOR EROSION & SEDIMENT CONTROL NOTES & DETAILS

AFTER THE ENTIRE SITE IS STABILIZED, CONTRACTOR SHOULD ADJUST ALL GRADES, AND ALL PROPOSED AND EXISTING STORM DRAINAGE PIPES, TO MATCH WITH THOSE ON FINAL APPROVED SET OF PLANS (AS PER DRAWING CG-101).

BUILDING PAD SUBGRADE ELEVATIONS SHOWN ARE APPROXIMATE AND REPRESENT A 6" STONE BASE AND A 6" FLOOR SLAV. ACTUAL SUBGRADE ELEVATIONS SHOULD BE CONFIRMED WITH PROJECT ARCHITECT AND GEOTECHNICAL REPORT.

THE EXISTING SUBGRADE OF THE SUBSURFACE AND SURFRACE STORMWATER MANAGEMENT INFILTRATION SYSTEMS SHALL NOT BE COMPACTED OR SUBJECT TO EXCESSIVE CONSTRUCTION EQUIPMENT. CONTRACTOR TO USE LIGHTWEIGHT CONSTRUCTION EQUIPMENT AND OPERATE MACHINERY FROM OUTSIDE THE FOOTPRINT OF THE SUBSURFACE BASIN WHENEVER POSSIBLE. SEE CG-101, CG-102, CE-102, CE-103, AND CE-104 FOR LIMITS OF BASIN.

MAP SYMBOL	SOIL TYPE AND CHARACTERISTICS	LIMITATIONS (SEE "SOIL LIMITATIONS AND RESOLUTIONS" NOTES FOR RESOLUTIONS)									TYPICAL DEPTHS	
		CORROSIVE TO CONCRETE	CORROSIVE TO STEEL	DWELLINGS WITH BASEMENTS	DWELLINGS WITHOUT BASEMENTS	LAWNS, LANDSCAPING, AND GOLF FAIRWAYS	LOCAL ROADS AND STREETS	SHALLOW EXCAVATIONS	SMALL COMMERCIAL BUILDINGS	UNPAVED LOCAL ROADS AND STREETS	DEPTH TO WATER TABLE	DEPTH TO BEDROCK
GrB	GLENVILLE SILT LOAM, 3 TO 8 PERCENT SLOPES	MODERATE	HIGH	VERY LIMITED	SOMEWHAT LIMITED	SOMEWHAT LIMITED	VERY LIMITED	VERY LIMITED	SOMEWHAT LIMITED	VERY LIMITED	6" TO 36"	15" TO 30" TO FRAGIPAN 60" TO 99" TO PARALITHIC
CdB	CHESTER SILT LOAM, 3 TO 8 PERCENT SLOPES	HIGH	MODERATE	NOT LIMITED	NOT LIMITED	SOMEWHAT LIMITED	VERY LIMITED	SOMEWHAT LIMITED	SOMEWHAT LIMITED	VERY LIMITED	>80"	> 80"
UfB	UDORTHENTS, SCHIST AND GNEISS	MODERALTE	LOW	SOMEWHAT LIMITED	SOMEWHAT LIMITED	SOMEWHAT LIMITED	VERY LIMITED	SOMEWHAT LIMITED	SOMEWHAT LIMITED	SOMEWHAT LIMITED	60"	40" TO 72" TO PARALITHIC
UkB	URBAN LAND-CHESTER COMPLEX, 0-8% SLOPES	N/A	N/A	N/A	N/A	N/A	N/A	N/A	N/A	N/A	>80"	72" TO 99" TO PARALITHIC

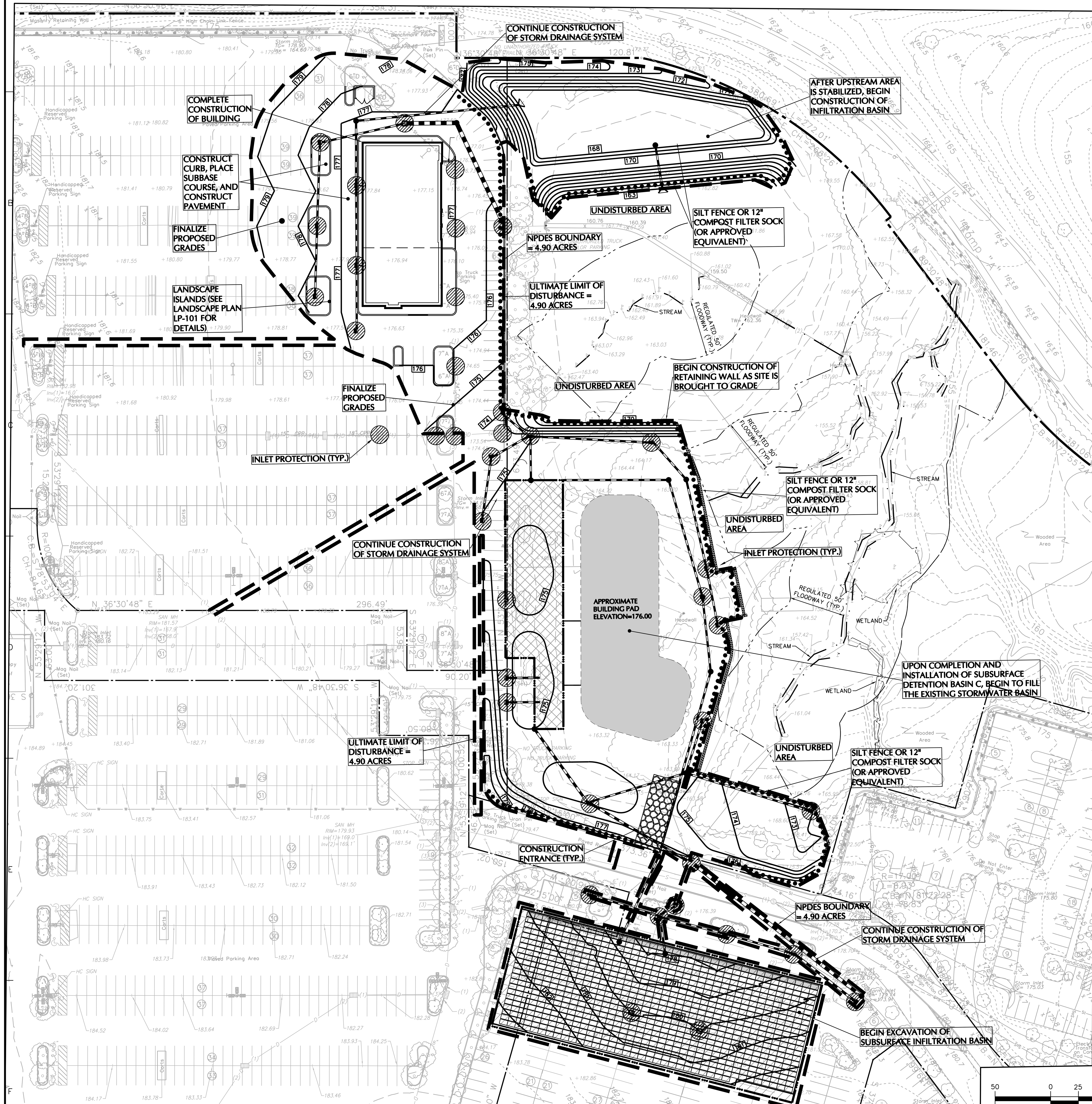

BIORETENTION CONSTRUCTION SEQUENCE

1. AREAS FOR BIORETENTION SHALL BE CLEARLY MARKED BEFORE ANY SITE WORK BEGINS TO AVOID SOIL DISTURBANCE AND COMPACTION DURING CONSTRUCTION. PROVIDE PHOTO DEMONSTRATING THAT BIORETENTION PERIMETER IS STAKED AND DOCUMENT ALL PHOTO AND MEASUREMENTS IN THE CONSTRUCTION CERTIFICATION FORMS.
2. TAKE PHOTO VERIFYING THAT THE BIORETENTION AREAS ARE STAKED.
3. COMPLETE SITE ELEVATION GRADING AND STABILIZE THE SOIL DISTURBED WITHIN THE LIMITS OF DISTURBANCE. STABILIZE GRADING WITHIN THE LIMIT OF DISTURBANCE EXCEPT WITH THE BIORETENTION AREAS. DO NOT FINALIZE BIORETENTION EXCAVATION AND CONSTRUCTION UNTIL THE DRAINAGE AREA IS FULLY STABILIZED.
4. TAKE PHOTO SHOWING THE BOTTOM OF THE FLAT, SCARIFIED, NON-COMPACTED SUBGRADE SOILS BEFORE INSTALLATION OF GEOTEXTILE.
5. EXCAVATE BIORETENTION TO PROPOSED BOTTOM ELEVATION (SEE POST CONSTRUCTION STORMWATER MANAGEMENT AND LANDSCAPE PLANS). THE BOTTOM OF THE BIORETENTION AREA SHALL BE AT A LEVEL GRADE. SCARIFY THE EXISTING SOIL SURFACES. DO NOT COMPACT IN-SITU SOILS.
6. TAKE PHOTO SHOWING INSTALLATION OF GEOTEXTILE LAYER ABOVE STONE LAYER.
7. TAKE PHOTO SHOW BASIN AFTER INSTALLATION OF BIORETENTION SOILS AND FINE GRADING.
8. TAKE PHOTO SHOWING THE BIORETENTION AREA AFTER PLANTING OF VEGETATION.
9. TAKE PHOTO SHOWING OUTLET CONTROL STRUCTURE, INCLUDING INTERNAL WEIRS, ORIFICES AND OUTLET PIPES.
10. TAKE MEASUREMENTS AS REQUIRED BY THE CONSTRUCTION CERTIFICATION FORM.
11. INSTALL UNDERDRAINS AND RISERS AS SHOWN ON THE POST CONSTRUCTION STORMWATER MANAGEMENT DRAWINGS AND DETAILS. CONNECT UNDERDRAINS INTO OUTLET STRUCTURES AS SHOWN ON THE POST CONSTRUCTION STORMWATER MANAGEMENT PLANS.
12. TAKE PHOTO SHOWING INSTALLATION OF STONE AND PERFORATED PIPE UNDERDRAINS.
13. TAKE PHOTO SHOWING CONNECTION OF UNDERDRAIN TO OVERFLOW SYSTEM.
14. COMPLETE FINAL GRADING TO ACHIEVE PROPOSED DESIGN ELEVATIONS.
15. CONSTRUCT INFLOW PIPES BUT DO NOT ALLOW RUNOFF TO ENTER THE BIORETENTION AREAS AT THIS STAGE.
16. PRESOAK BIORETENTION SOIL AT LEAST ONE DAY PRIOR TO FINAL GRADING AND LANDSCAPING TO ALLOW FOR SETTLEMENT.
17. INSTALL BIORETENTION SOILS AS SHOWN ON PLAN AND SPECIFICATIONS AS INDICATED ON THE LANDSCAPE PLANS AND DETAILS. BACKFILL THE EXCAVATED AREA AS SOON AS THE SUBGRADE PREPARATION IS COMPLETE TO AVOID ACCUMULATION OF DEBRIS. PLACE BIORETENTION SOIL IN 12-18 INCHES LIFTS AND TAMP LIGHTLY. OVERFILLING IS RECOMMENDED TO ACCOUNT FOR SETTLEMENT.
18. BIORETENTION SOILS SHALL NOT BE SUBJECT TO EXCESSIVE CONSTRUCTION EQUIPMENT ONCE INSTALLED. IF IT IS ESSENTIAL THAT EQUIPMENT BE USED IN THIS AREA, ALL EQUIPMENT MUST BE APPROVED BY THE ENGINEER. USE OF EQUIPMENT WITH NARROW TRACKS OR TIRES, RUBBER TIRES WITH LARGE LUGS, OR HIGH PRESSURE TIRES SHALL NOT BE USED.
19. AFTER ALLOWING FOR SETTLEMENT, COMPLETE FINAL GRADING WITHIN ABOUT 2 INCHES OF THE PROPOSED DESIGN ELEVATIONS.
20. INSTALL PLANTINGS AND SEED MIX AS INDICATED ON THE LANDSCAPE DRAWINGS.
21. WATER VEGETATION AT THE END OF EACH DAY FOR TWO WEEKS AFTER PLANTING IS COMPLETED. WATER VEGETATION REGULARLY DURING FIRST YEAR TO ENSURE SUCCESSFUL ESTABLISHMENT.
22. AFTER BIORETENTION AREAS ARE COMPLETED, THESE AREAS SHALL BE CLEARLY MARKED TO AVOID FURTHER SOIL DISTURBANCE AND COMPACTION.
23. PROTECT BIORETENTION FROM SEDIMENT AT ALL TIMES DURING CONSTRUCTION.
24. WHEN THE SITE IS FULLY VEGETATED AND THE SOIL MANTLE STABILIZED THE ENGINEER SHALL BE NOTIFIED AND SHALL INSPECT THE BIORETENTION DRAINAGE AREAS AT HIS / HER DISCRETION BEFORE THE AREA IS BROUGHT ONLINE AND SEDIMENT CONTROL DEVISE ARE REMOVED.

GENERAL E&S NOTES

1. A COPY OF THE APPROVED EROSION AND SEDIMENT CONTROL PLAN MUST BE AVAILABLE AT THE PROJECT SITE AT ALL TIMES. THE BUCKS COUNTY CONSERVATION DISTRICT SHALL BE NOTIFIED OF ANY CHANGES TO THE APPROVED PLAN PRIOR TO IMPLEMENTATION OF THOSE CHANGES. THE DISTRICT MAY REQUIRE A WRITTEN SUBMITTAL OF THOSE CHANGES FOR REVIEW AND APPROVAL AT ITS DISCRETION.
2. IMMEDIATELY UPON DISCOVERING UNFORESEEN CIRCUMSTANCES POSING THE POTENTIAL FOR ACCELERATED EROSION AND/OR SEDIMENT POLLUTION, THE OPERATOR SHALL IMPLEMENT APPROPRIATE BEST MANAGEMENT PRACTICES TO MINIMIZE THE POTENTIAL FOR ACCELERATED EROSION AND/OR SEDIMENT POLLUTION AND NOTIFY THE BUCKS COUNTY CONSERVATION DISTRICT.
3. ALL PUMPING OF SEDIMENT LADEN WATER SHALL BE THROUGH A SEDIMENT CONTROL BMP, SUCH AS A PUMPED WATER FILTER BAG OR EQUIVALENT SEDIMENT REMOVAL FACILITY, OVER UNDISTURBED VEGETATED AREAS.
4. FAILURE TO CORRECTLY INSTALL E&S BMPS, FAILURE TO PREVENT SEDIMENT-LADEN RUNOFF FROM LEAVING THE EARTH DISTURBANCE ACTIVITY, OR FAILURE TO TAKE IMMEDIATE CORRECTIVE ACTION TO RESOLVE FAILURE OF E&S BMPS MAY RESULT IN ADMINISTRATIVE, CIVIL, AND/OR CRIMINAL PENALTIES BEING INSTITUTED BY THE DEPARTMENT AS DEFINED IN SECTION 602 OF THE PENNSYLVANIA CLEAN STREAMS LAW. THE CLEAN STREAMS LAW PROVIDES FOR UP TO $10,000 PER DAY IN CIVIL PENALTIES, UP TO $10,000 IN SUMMARY CRIMINAL PENALTIES, AND UP TO $25,000 IN MISDEMEANOR CRIMINAL PENALTIES FOR EACH VIOLATION.
5. ALL BUILDING MATERIALS AND WASTES SHALL BE REMOVED FROM THE SITE AND RECYCLED OR DISPOSED OF IN ACCORDANCE WITH THE DEPARTMENT'S SOLID WASTE MANAGEMENT REGULATIONS AT 25 PA. CODE 260.1 ET SEQ., 271.1., AND 287.1 ET SEQ. NO BUILDING MATERIALS OR WASTES OR UNUSED BUILDING MATERIALS SHALL BE BURNED, BURIED, DUMPED, OR DISCHARGED AT THE SITE.
6. THE CONTRACTOR WILL BE RESPONSIBLE FOR THE REMOVAL OF ANY EXCESS MATERIAL AND MAKE SURE THE SITE(S)RECEIVING THE EXCESS HAS AN APPROVED AND FULLY IMPLEMENTED EROSION AND SEDIMENT CONTROL PLAN THAT MEETS THE CONDITIONS OF CHAPTER 102 AND/OR OTHER STATE OR FEDERAL REGULATIONS.
7. CLEAN FILL IS DEFINED AS: UNCONTAMINATED, NON-WATER SOLUBLE, NON-DECOMPOSABLE, INERT, SOLID MATERIAL. THE TERM INCLUDES SOIL, ROCK, STONE, DREDGED MATERIAL, USED ASPHALT, AND BRICK, BLOCK OR CONCRETE FROM CONSTRUCTION AND DEMOLITION ACTIVITIES THAT IS SEPARATE FROM OTHER WASTE AND IS RECOGNIZABLE AS SUCH. THE TERM DOES NOT INCLUDE MATERIALS PLACED IN OR ON THE WATERS OF THE COMMONWEALTH UNLESS OTHERWISE AUTHORIZED. (THE TERM "USED ASPHALT" DOES NOT INCLUDE MILLED ASPHALT OR ASPHALT THAT HAS BEEN PROCESSED FOR RE-USE.).
8. ANY PLACEMENT OF CLEAN FILL THAT HAS BEEN AFFECTED BY A SPILL OR RELEASE OF A REGULATED SUBSTANCE MUST USE FORM FP-001 TO CERTIFY THE ORIGIN OF THE FILL MATERIAL AND THE RESULTS OF THE ANALYTICAL TESTING TO QUALIFY THE MATERIAL AS CLEAN FILL. FORM FP-001 MUST BE RETAINED BY THE OWNER OF THE PROPERTY RECEIVING THE FILL.
9. ENVIRONMENTAL DUE DILIGENCE MUST BE PERFORMED TO DETERMINE IF THE FILL MATERIALS ASSOCIATED WITH THE PROJECT QUALIFY AS CLEAN FILL. ENVIRONMENTAL DUE DILIGENCE IS DEFINED AS: INVESTIGATIVE TECHNIQUES, INCLUDING, BUT NOT LIMITED TO, VISUAL PROPERTY INSPECTIONS, ELECTRONIC DATA BASE SEARCHES, REVIEW OF PROPERTY OWNERSHIP, REVIEW OF PROPERTY USE HISTORY, SANBORN MAPS, ENVIRONMENTAL QUESTIONNAIRES, TRANSACTION SCREENS, ANALYTICAL TESTING, ENVIRONMENTAL ASSESSMENTS OR AUDITS. ANALYTICAL TESTING IS NOT A REQUIRED PART OF DUE DILIGENCE UNLESS VISUAL INSPECTION AND/OR REVIEW OF THE PAST LAND USE OF THE PROPERTY INDICATES THAT THE FILL MAY HAVE BEEN SUBJECTED TO A SPILL OR RELEASE OF A REGULATED SUBSTANCE.
IF THE FILL MAY HAVE BEEN AFFECTED BY A SPILL OR RELEASE OF A REGULATED SUBSTANCE, IT MUST BE TESTED TO DETERMINE IF IT QUALIFIES AS CLEAN FILL. TESTING SHOULD BE PERFORMED IN ACCORDANCE WITH APPENDIX A OF THE DEPARTMENT'S POLICY 'MANAGEMENT OF CLEAN FILL."

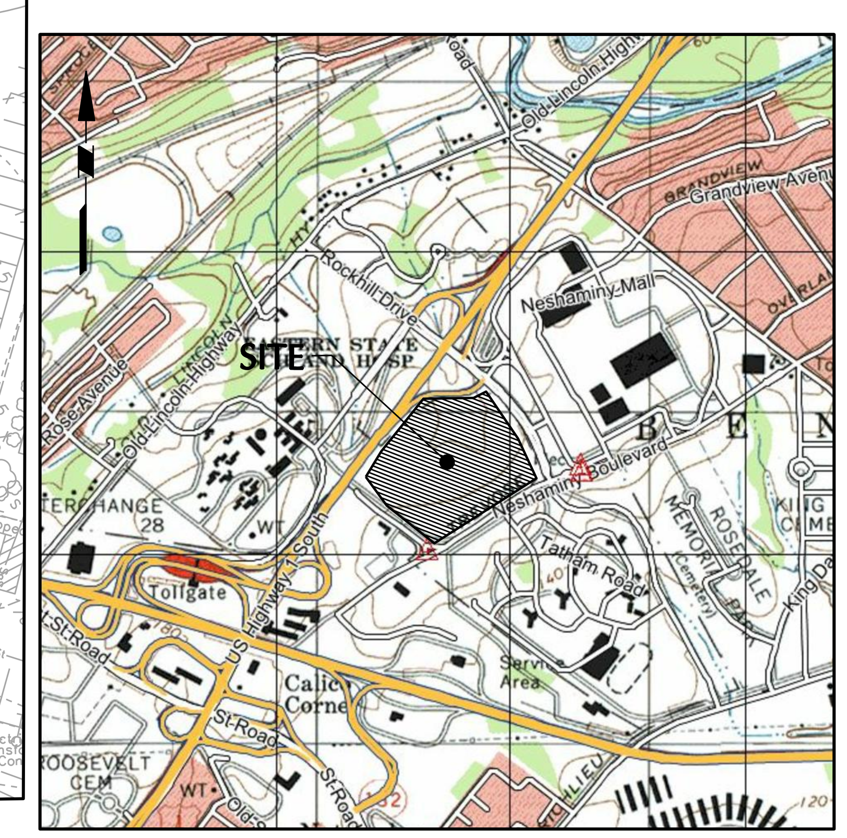

USGS MAP

1"=1500'

CONSTRUCTION SEQUENCE - STAGE III:

1. ALL EARTH DISTURBANCE ACTIVITIES SHALL PROCEED IN ACCORDANCE WITH THE FOLLOWING SEQUENCE. EACH STAGE SHALL BE COMPLETED AND IMMEDIATELY STABILIZED BEFORE ANY FOLLOWING STAGE IS INITIATED. CLEARING, GRUBBING AND TOPSOIL STRIPPING SHALL BE LIMITED TO THOSE AREAS DESCRIBED IN EACH STAGE.
2. AT LEAST 7 DAYS BEFORE STARTING ANY EARTH DISTURBANCE ACTIVITIES, INCLUDING CLEARING AND GRUBBING, THE OWNER AND/OR OPERATOR SHALL INVITE ALL CONTRACTORS, THE LANDOWNER, ALL APPROPRIATE MUNICIPAL OFFICIALS, THE E&S PLAN PREPARER, THE PCSM PLAN PREPARER, THE LICENSED PROFESSIONAL RESPONSIBLE FOR OVERSIGHT OF CRITICAL STAGES OF IMPLEMENTATION OF THE PCSM PLAN, AND A REPRESENTATIVE OF THE BUCKS COUNTY CONSERVATION DISTRICT TO AN ON-SITE PRE-CONSTRUCTION MEETING.
3. AT LEAST 3 DAYS BEFORE STARTING ANY EARTH DISTURBANCE ACTIVITIES, ALL CONTRACTORS INVOLVED IN THOSE ACTIVITIES SHALL NOTIFY THE PENNSYLVANIA ONE CALL SYSTEM INCORPORATED AT 1-800-242-1776 FOR THE LOCATION OF EXISTING UNDERGROUND UTILITIES.
4. FOR THE TARGET PARKING LOT PAD, BEGIN CONSTRUCTION OF FOUNDATION ELEMENTS FOR BUILDING.
5. BEGIN CONSTRUCTION OF BUILDINGS. BEGIN OR CONTINUE INSTALLATION OF UTILITIES INCLUDING BUT NOT LIMITED TO GAS, ELECTRIC, TELEPHONE, WATER, SANITARY SEWER AND REMAINING STORM DRAINAGE WITH INLET PROTECTION.
6. INSTALL CONCRETE CURBING WITHIN PARKING AREAS AND DRIVEWAYS.
7. PRIOR TO CONSTRUCTION OF BIO-RETENTION AREAS, SEE BIO-RETENTION CONSTRUCTION SEQUENCE ON THIS DRAWING.
8. INSTALL PAVING STONE BASE AND PAVING BINDER COURSE.
9. FINALIZE GRADING OF BUILDING PADS AND STABILIZE.
10. COMPLETE CONSTRUCTION AND STABILIZATION OF THE STORM DRAINAGE SYSTEM.
11. UPON COMPLETION OF THE SURFACE INFILTRATION SYSTEM, AVOID EXCESS COMPACTION USING SUITABLE EQUIPMENT AND PLACE COMPOST FILTER SOCK ALONG THE PERIMETER OF THE BOTTOM ELEVATION.
12. PRIOR TO WEARING COURSE PAVING, SIGNAGE AND STRIPING, ALL OTHER CONSTRUCTION MUST BE COMPLETED, INCLUDING BUT NOT LIMITED TO BUILDINGS, DRIVEWAYS, LANDSCAPING, GRADING AND CONCRETE WORK.
13. PLACE WEARING COURSE FOR ALL AREAS THAT ARE COMPLETED. BEGIN STRIPING OF PARKING AREAS AND ACCESS DRIVES.
14. UPON COMPLETION OF SUBSURFACE BASIN C, BEGIN EARTHWORK ACTIVITIES TO FILL IN THE EXISTING BASIN. SUBSURFACE INFILTRATION BASIN A CAN BE EXCAVATED AT THIS TIME.
15. INSTALL RETAINING WALL AND STORM DRAINAGE SYSTEM AS SITE IS BROUGHT TO GRADE. INLET PROTECTION SHOULD BE INSTALLED ON ALL INLETS.
16. UPON COMPLETION OF THE SUBSURFACE INFILTRATION SYSTEM, AVOID EXCESS COMPACTION USING SUITABLE EQUIPMENT.
17. INSTALLATION OF UTILITIES MAY COMMENCE AT THIS STAGE IF PREFERRED BY THE CONTRACTOR. TRENCH EXCAVATION SHALL BE LIMITED TO THE LENGTH OF PIPE THAT CAN BE COMPLETED IN ONE DAY.
18. WHEN NO WORK IS TO BE PERFORMED ON ANY AREA, IT SHALL BE PROTECTED IMMEDIATELY BY TEMPORARY SEEDING, MULCHING OR SODDING.
19. REFER TO DRAWINGS FOR SOIL EROSION AND SEDIMENT CONTROL MAINTENANCE PROGRAM.
20. CONTRACTOR MUST PERIODICALLY WET-DOWN EXPOSED SOILS OR BARE GROUND TO PREVENT THE WIND FROM BLOWING DUST PARTICLES FROM THE CONSTRUCTION SITE TO NEIGHBORING AREAS.
21. INSTALL THE NECESSARY UNDERGROUND UTILITIES AS FOLLOWS:
    a. LIMIT DAILY TRENCH EXCAVATION TO THE LENGTH OF PIPE WHICH CAN BE COMPLETED THE SAME DAY.
    b. WATER THAT ACCUMULATES IN THE OPEN TRENCH WILL BE COMPLETELY REMOVED BY PUMPING USING A SEDIMENT FILTER BAG BEFORE PIPE PLACEMENT AND/OR BACKFILLING BEGINS.
    c. ALL PROPOSED INLETS INSTALLED THAT MAY POTENTIALLY RECEIVE SEDIMENT-LADEN RUNOFF FROM DISTURBED AREAS DURING THE CONSTRUCTION PERIOD, MUST BE PROTECTED WITH INLET PROTECTION.

GENERAL SITE NOTES:

1. THE CONTRACTOR SHALL FURNISH, INSTALL, TEST AND COMPLETE ALL WORK TO THE SATISFACTION OF THE ENGINEER AND OWNER IN ACCORDANCE WITH THE CONTRACT DOCUMENTS. THE CONTRACTOR IS SOLELY RESPONSIBLE FOR MEANS AND METHODS OF CONSTRUCTION; AS SUCH, THESE PLANS DO NOT COMPLETELY REPRESENT, NOR ARE THEY INTENDED TO REPRESENT, ALL SPECIFIC INSTRUCTIONS REQUIRED FOR SITEWORK CONSTRUCTION. THE CONTRACTOR IS RESPONSIBLE TO CONSTRUCT ALL IMPROVEMENTS DEPICTED ON THESE PLANS IN ACCORDANCE WITH ALL APPLICABLE RULES, REGULATIONS AND LAWS IN EFFECT AT THE TIME OF CONSTRUCTION.
2. THE CONTRACTOR SHALL ACCEPT THE SITE AS IS. THE CONTRACTOR SHALL ASSESS CONDITIONS, AND THE KIND, QUALITY AND QUANTITY OF WORK REQUIRED. THE OWNER AND ENGINEER MAKE NO GUARANTEE IN REGARD TO THE ACCURACY OF ANY INFORMATION THAT WAS OBTAINED DURING INVESTIGATIONS. THE CONTRACTOR SHALL: MAKE A THOROUGH SITE INSPECTION IN ORDER TO FIELD CHECK EXISTING SITE CONDITIONS; CORRELATE CONDITIONS WITH THE DRAWINGS; AND, RESOLVE ANY POSSIBLE CONSTRUCTION CONFLICTS WITH THE OWNER AND ENGINEER PRIOR TO COMMENCEMENT OF WORK. THE CONTRACTOR SHALL PERFORM ADDITIONAL TOPOGRAPHIC SURVEYS HE/SHE DEEMS NECESSARY, PROVIDED THEY ARE COORDINATED WITH THE OWNER. ANY CONDITIONS DETERMINED BY THE CONTRACTOR THAT DIFFER FROM THE INFORMATION SHOWN ON THE DRAWINGS THAT ARE NOT BROUGHT TO THE ATTENTION OF THE OWNER AND ENGINEER PRIOR TO THE START OF WORK SHALL NOT BE CONSIDERED GROUNDS FOR ADDITIONAL PAYMENT OR CHANGES TO THE CONTRACT DURATION, OR ANY OTHER CLAIMS AGAINST THE OWNER OR OWNER'S ENGINEER.
3. THE CONTRACTOR SHALL, WHEN HE/SHE DEEMS NECESSARY, PROVIDE A WRITTEN REQUEST FOR INFORMATION (RFI) TO THE OWNER AND/OR OWNER'S DESIGNATED REPRESENTATIVE, AND ENGINEER PRIOR TO THE CONSTRUCTION OF ANY SPECIFIC SITEWORK ITEM. THE (RFI) SHALL BE IN A FORM ACCEPTABLE TO OWNER AND/OR OWNER'S DESIGNATED REPRESENTATIVE, AND ENGINEER AND SHALL ALLOW FOR A MINIMUM OF THREE WORK DAYS FOR A WRITTEN REPLY. RFIS SHALL BE NUMBERED CONSECUTIVELY BY DATE SUBMITTED. THE CONTRACTOR SHALL BE SOLELY RESPONSIBLE FOR SITEWORK ITEMS CONSTRUCTED DIFFERENTLY THAN INTENDED OR AS DEPICTED ON THE PLANS.
4. INFORMATION RELATED TO ELEVATIONS AND PROPOSED UTILITIES (SUCH AS ROADWAY GRADES, INVERT ELEVATIONS, RIM ELEVATIONS, GRATE ELEVATIONS, BUILDING FINISHED FLOOR ELEVATIONS, ETC.) MAY BE FOUND IN MORE THAN ONE LOCATION IN THE CONTRACT DOCUMENTS. THE CONTRACTOR SHALL SUFFICIENTLY REVIEW ALL PLANS, PROFILES AND ANY OTHER INFORMATION IN THE CONTRACT DOCUMENTS FOR CONSISTENCY PRIOR TO BID. ANY INCONSISTENCIES OR DISCREPANCIES THAT ARE FOUND BY THE CONTRACTOR OR HIS ASSIGNS SHALL BE IMMEDIATELY BROUGHT TO THE ATTENTION OF THE OWNER AND ENGINEER IN WRITING, IN THE FORMAT OF AN RFI PRIOR TO BID.
5. THERE ARE ADDITIONAL NOTES, SPECIFICATIONS AND REQUIREMENTS CONTAINED THROUGHOUT THE PLAN SET AS WELL AS REFERENCES TO SPECIFICATIONS FROM APPLICABLE GOVERNING AUTHORITIES AND INDUSTRY STANDARDS. IT IS THE CONTRACTOR'S RESPONSIBILITY TO OBTAIN, REVIEW AND ADHERE TO ALL THESE DOCUMENTS.
6. CONTRACTOR IS SPECIFICALLY CAUTIONED THAT ALL CONSTRUCTION STAKEOUT FOR THIS PROJECT MUST BE COMPLETED FROM THE SITE SPECIFIC SURVEY CONTROL (HORIZONTAL AND VERTICAL) UPON WHICH THE DESIGN IS BASED. THE CONTRACTOR SHOULD NOT RELY ON OR RE-ESTABLISH SURVEY CONTROL BY GPS OR OTHER METHODS FOR USE IN CONSTRUCTION STAKEOUT OR ANY OTHER PURPOSE FOR THIS PROJECT. ANY DISCREPANCIES BETWEEN THE EXISTING HORIZONTAL OR VERTICAL DATA SHOWN ON THESE DRAWINGS AND THAT ENCOUNTERED IN THE FIELD MUST BE REPORTED TO THE DESIGN TEAM PRIOR TO CONSTRUCTION FOR RESOLUTION.

MAINTENANCE PROGRAM

1. UNTIL THE SITE IS STABILIZED, ALL EROSION AND SEDIMENT CONTROL BMPS MUST BE MAINTAINED PROPERLY. MAINTENANCE MUST INCLUDE INSPECTIONS OF ALL EROSION AND SEDIMENT CONTROL BMPS AFTER EACH RUNOFF EVENT AND ON A WEEKLY BASIS. ALL PREVENTATIVE AND REMEDIAL MAINTENANCE WORK, INCLUDING CLEANOUT, REPAIR, REPLACEMENT, RE-GRADING, RESEEDING, RE-MULCHING AND RE-NETTING MUST BE PERFORMED IMMEDIATELY. IF EROSION AND SEDIMENT CONTROL BMPS FAIL TO PERFORM AS EXPECTED, REPLACEMENT BMPS OR MODIFICATIONS OF THOSE INSTALLED WILL BE REQUIRED.
2. ANY SEDIMENT REMOVED FROM BMPS DURING CONSTRUCTION WILL BE RETURNED TO UPLAND AREAS ON SITE AND INCORPORATED INTO THE SITE GRADING.
3. A LOG SHOWING THE DATES THAT E&S BMPS WERE INSPECTED AS WELL AS ANY DEFICIENCIES FOUND AND THE DATE THAT THEY WERE CORRECTED SHALL BE MAINTAINED ON THE SITE AND BE MADE AVAILABLE TO THE BUCKS COUNTY CONSERVATION DISTRICT OR OTHER REGULATORY AGENCY OFFICIALS AT THE TIME OF INSPECTION.

ACT 287 AS AMENDED

IT IS THE CONTRACTOR'S RESPONSIBILITY TO COMPLY WITH THE PENNSYLVANIA ACT 181 OF 2006 AND TO CONTACT THE "ONE CALL SYSTEM" THREE (3) WORKING DAYS (UNLESS OTHERWISE NOTED) PRIOR TO START OF CONSTRUCTION.

PENNSYLVANIA ONE CALL 1-800-242-1776
SERIAL NO. 20101102688

AQUA PENNSYLVANIA INC.
762 W LANCASTER AVE
BRYN MAWR, PA. 19010
(610) 562-1402

VERIZON PENNSYLVANIA
900 RACE STREET, 6TH FLOOR
PHILADELPHIA, PA 19107
(215) 351-8947

AT&T LOCAL SERVICES
2315 SALEM RD A10
CONYERS, GA. 33013
(770) 929-4584

COMCAST CABLE COMMUNICATIONS INC.
55 INDUSTRIAL DR
IVYLAND, PA. 18974
(215) 918-3137

PECO ENERGY COMPANY
400 PARK AVE
WARMINSTER, PA 18974
(215) 956-3121

BUCKS COUNTY WATER AND SEWER AUTHORITY
1275 ALMSHOUSE RD
WARRINGTON, PA 18976
(800) 222-2068

BENSALEM TOWNSHIP
3800 HULMEVILLE RD
BENSALEM, PA 19020
(215) 633-3733

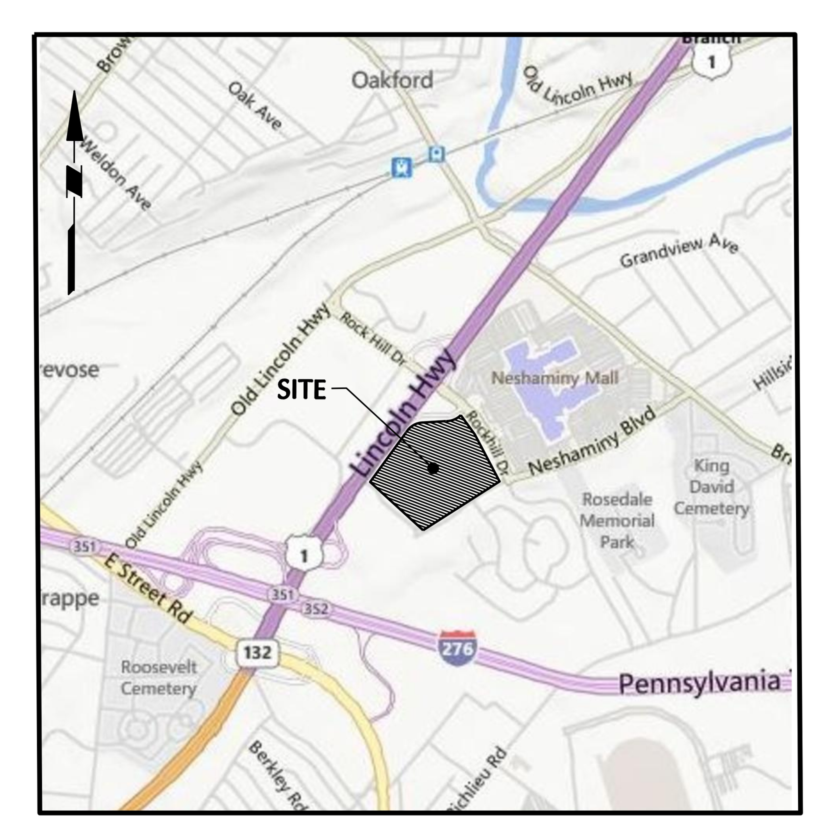

LOCATION MAP

1"=2000'

LEGEND

PROPERTY LINE	
COMPOST FILTER SOCK	
CONST. FENCE	
LIMIT OF DISTURBANCE	
NPDES PERMIT BOUNDARY	
EXISTING WATER LINE	W
PROPOSED WATER LINE	
EXISTING SAN SEWER	S
PROPOSED SAN SEWER	
EXISTING STORM SEWER	D
EXISTING ELECTRIC	E
EXISTING TELEPHONE	T
EXISTING GAS	G
EXISTING CONTOUR	70
PROPOSED CONTOUR	70
CONSTRUCTION ENTRANCE	
INLET PROTECTION	
SOIL TYPE	UtB ©
SOIL BOUNDARY LINE	
PROPOSED STORM PIPE	
PROPOSED STORM INLET	
PROPOSED STORM MANHOLE	
DRAINAGE BOUNDARY	

CALL BEFORE YOU DIG
IN PA, TOLL FREE
1 - 800 - 242-1776
FOR FREE MARKOUTS TO LOCATE UNDERGROUND UTILITIES
" IT'S THE LAW "

Date	Description	No.
8/8/2016	REVISIONS PER TOWNSHIP AND COUNTY COMMENTS	1.

REVISIONS

BRIAN M. CONLON DATE
PROFESSIONAL ENGINEER
PA Lic. No. PE061782

LANGAN
30 South 17th Street, Suite 1300, Philadelphia, PA 19103
T: 215.864.0640 F: 215.864.0671 www.langan.com
NEW JERSEY NEW YORK CONNECTICUT PENNSYLVANIA OHIO
VIRGINIA WASHINGTON DC FLORIDA NORTH DAKOTA CALIFORNIA
ABU DHABI ATHENS DOHA DUBAI ISTANBUL

Langan Engineering, Environmental, Surveying and Landscape Architecture, D.P.C.
Langan Engineering and Environmental Services, Inc.
Langan CT, Inc.
Langan International LLC
Collectively known as Langan

Project
THE MARKETPLACE AT NESHAMINY

BENSALEM TOWNSHIP
BUCKS COUNTY PENNSYLVANIA

Drawing Title
SOIL EROSION AND SEDIMENT CONTROL PLAN - STAGE III

Project No.: 220048102
Date: 24 JUNE 2016
Scale: 1"=50'
Drawn By: TFH
Checked By: BMC
Drawing No.: CE-103
SHEET 22 OF 29

© 2014 Langan

GENERAL E&S NOTES

1. A COPY OF THE APPROVED EROSION AND SEDIMENT CONTROL PLAN MUST BE AVAILABLE AT THE PROJECT SITE AT ALL TIMES. THE BUCKS COUNTY CONSERVATION DISTRICT SHALL BE NOTIFIED OF ANY CHANGES TO THE APPROVED PLAN PRIOR TO IMPLEMENTATION OF THOSE CHANGES. THE DISTRICT MAY REQUIRE A WRITTEN SUBMITTAL OF THOSE CHANGES FOR REVIEW AND APPROVAL AT ITS DISCRETION.
2. IMMEDIATELY UPON DISCOVERING UNFORESEEN CIRCUMSTANCES POSING THE POTENTIAL FOR ACCELERATED EROSION AND/OR SEDIMENT POLLUTION, THE OPERATOR SHALL IMPLEMENT APPROPRIATE BEST MANAGEMENT PRACTICES TO MINIMIZE THE POTENTIAL FOR ACCELERATED EROSION AND/OR SEDIMENT POLLUTION AND NOTIFY THE BUCKS COUNTY CONSERVATION DISTRICT.
3. ALL PUMPING OF SEDIMENT LADEN WATER SHALL BE THROUGH A SEDIMENT CONTROL BMP, SUCH AS A PUMPED WATER FILTER BAG OR EQUIVALENT SEDIMENT REMOVAL FACILITY, OVER UNDISTURBED VEGETATED AREAS.
4. FAILURE TO CORRECTLY INSTALL E&S BMPS, FAILURE TO PREVENT SEDIMENT-LADEN RUNOFF FROM LEAVING THE EARTH DISTURBANCE ACTIVITY, OR FAILURE TO TAKE IMMEDIATE CORRECTIVE ACTION TO RESOLVE FAILURE OF E&S BMPS MAY RESULT IN ADMINISTRATIVE, CIVIL, AND/OR CRIMINAL PENALTIES BEING INSTITUTED BY THE DEPARTMENT AS DEFINED IN SECTION 602 OF THE PENNSYLVANIA CLEAN STREAMS LAW. THE CLEAN STREAMS LAW PROVIDES FOR UP TO $10,000 PER DAY IN CIVIL PENALTIES, UP TO $10,000 IN SUMMARY CRIMINAL PENALTIES, AND UP TO $25,000 IN MISDEMEANOR CRIMINAL PENALTIES FOR EACH VIOLATION.
5. ALL BUILDING MATERIALS AND WASTES SHALL BE REMOVED FROM THE SITE AND RECYCLED OR DISPOSED OF IN ACCORDANCE WITH THE DEPARTMENT'S SOLID WASTE MANAGEMENT REGULATIONS AT 25 PA. CODE 260.1 ET SEQ., 271.1., AND 287.1 ET SEQ. NO BUILDING MATERIALS OR WASTES OR UNUSED BUILDING MATERIALS SHALL BE BURNED, BURIED, DUMPED, OR DISCHARGED AT THE SITE.
6. THE CONTRACTOR WILL BE RESPONSIBLE FOR THE REMOVAL OF ANY EXCESS MATERIAL AND MAKE SURE THE SITE(S)RECEIVING THE EXCESS HAS AN APPROVED AND FULLY IMPLEMENTED EROSION AND SEDIMENT CONTROL PLAN THAT MEETS THE CONDITIONS OF CHAPTER 102 AND/OR OTHER STATE OR FEDERAL REGULATIONS.
7. CLEAN FILL IS DEFINED AS: UNCONTAMINATED, NON-WATER SOLUBLE, NON-DECOMPOSABLE, INERT, SOLID MATERIAL. THE TERM INCLUDES SOIL, ROCK, STONE, DREDGED MATERIAL, USED ASPHALT, AND BRICK, BLOCK OR CONCRETE FROM CONSTRUCTION AND DEMOLITION ACTIVITIES THAT IS SEPARATE FROM OTHER WASTE AND IS RECOGNIZABLE AS SUCH. THE TERM DOES NOT INCLUDE MATERIALS PLACED IN OR ON THE WATERS OF THE COMMONWEALTH UNLESS OTHERWISE AUTHORIZED. (THE TERM "USED ASPHALT" DOES NOT INCLUDE MILLED ASPHALT OR ASPHALT THAT HAS BEEN PROCESSED FOR RE-USE.).
8. ANY PLACEMENT OF CLEAN FILL THAT HAS BEEN AFFECTED BY A SPILL OR RELEASE OF A REGULATED SUBSTANCE MUST USE FORM FP-001 TO CERTIFY THE ORIGIN OF THE FILL MATERIAL AND THE RESULTS OF THE ANALYTICAL TESTING TO QUALIFY THE MATERIAL AS CLEAN FILL. FORM FP-001 MUST BE RETAINED BY THE OWNER OF THE PROPERTY RECEIVING THE FILL.
9. ENVIRONMENTAL DUE DILIGENCE MUST BE PERFORMED TO DETERMINE IF THE FILL MATERIALS ASSOCIATED WITH THE PROJECT QUALIFY AS CLEAN FILL. ENVIRONMENTAL DUE DILIGENCE IS DEFINED AS: INVESTIGATIVE TECHNIQUES, INCLUDING, BUT NOT LIMITED TO, VISUAL PROPERTY INSPECTIONS, ELECTRONIC DATA BASE SEARCHES, REVIEW OF PROPERTY OWNERSHIP, REVIEW OF PROPERTY USE HISTORY, SANBORN MAPS, ENVIRONMENTAL QUESTIONNAIRES, TRANSACTION SCREENS, ANALYTICAL TESTING, ENVIRONMENTAL ASSESSMENTS OR AUDITS. ANALYTICAL TESTING IS NOT A REQUIRED PART OF DUE DILIGENCE UNLESS VISUAL INSPECTION AND/OR REVIEW OF THE PAST LAND USE OF THE PROPERTY INDICATES THAT THE FILL MAY HAVE BEEN SUBJECTED TO A SPILL OR RELEASE OF A REGULATED SUBSTANCE. IF THE FILL MAY HAVE BEEN AFFECTED BY A SPILL OR RELEASE OF A REGULATED SUBSTANCE, IT MUST BE TESTED TO DETERMINE IF IT QUALIFIES AS CLEAN FILL. TESTING SHOULD BE PERFORMED IN ACCORDANCE WITH APPENDIX A OF THE DEPARTMENT'S POLICY "MANAGEMENT OF CLEAN FILL."

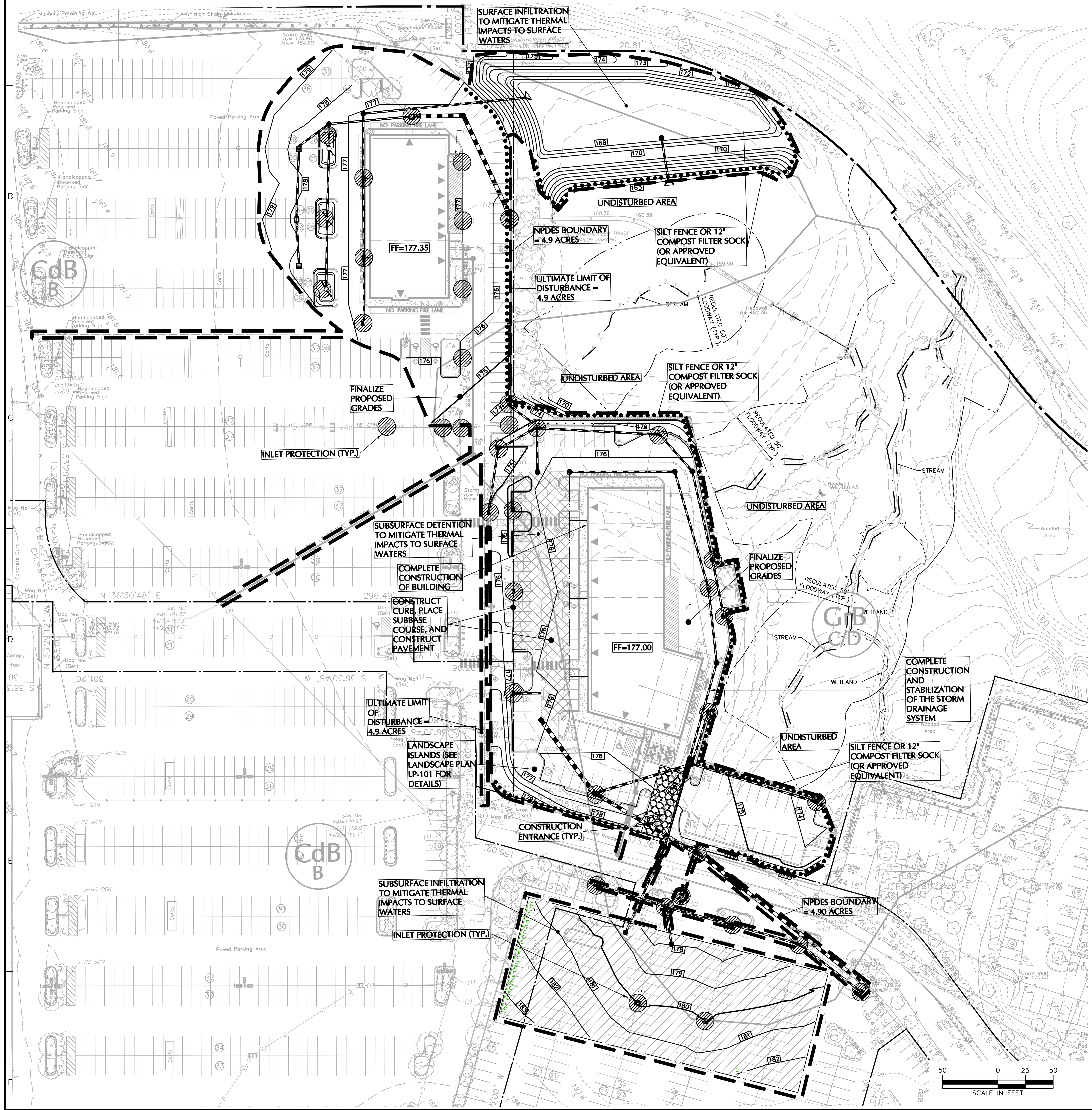

CONSTRUCTION SEQUENCE - STAGE III:

1. ALL EARTH DISTURBANCE ACTIVITIES SHALL PROCEED IN ACCORDANCE WITH THE FOLLOWING SEQUENCE. EACH STAGE SHALL BE COMPLETED AND IMMEDIATELY STABILIZED BEFORE ANY FOLLOWING STAGE IS INITIATED. CLEARING, GRUBBING AND TOPSOIL STRIPPING SHALL BE LIMITED TO THOSE AREAS DESCRIBED IN EACH STAGE.
2. AT LEAST 7 DAYS BEFORE STARTING ANY EARTH DISTURBANCE ACTIVITIES, INCLUDING CLEARING AND GRUBBING, THE OWNER AND/OR OPERATOR SHALL INVITE ALL CONTRACTORS, THE LANDOWNER, ALL APPROPRIATE MUNICIPAL OFFICIALS, THE E&S PLAN PREPARER, THE PCSM PLAN PREPARER, THE LICENSED PROFESSIONAL RESPONSIBLE FOR OVERSIGHT OF CRITICAL STAGES OF IMPLEMENTATION OF THE PCSM PLAN, AND A REPRESENTATIVE OF THE BUCKS COUNTY CONSERVATION DISTRICT TO AN ON-SITE PRE-CONSTRUCTION MEETING.
3. AT LEAST 3 DAYS BEFORE STARTING ANY EARTH DISTURBANCE ACTIVITIES, ALL CONTRACTORS INVOLVED IN THOSE ACTIVITIES SHALL NOTIFY THE PENNSYLVANIA ONE CALL SYSTEM INCORPORATED AT 1-800-242-1776 FOR THE LOCATION OF EXISTING UNDERGROUND UTILITIES.
4. BEGIN CONSTRUCTION OF FOUNDATION ELEMENTS FOR BUILDING.
5. BEGIN CONSTRUCTION OF BUILDINGS. BEGIN OR CONTINUE INSTALLATION OF UTILITIES INCLUDING BUT NOT LIMITED TO GAS, ELECTRIC, TELEPHONE, WATER, SANITARY SEWER AND REMAINING STORM DRAINAGE WITH INLET PROTECTION.
6. INSTALL CONCRETE CURBING WITHIN PARKING AREAS AND DRIVEWAYS.
7. INSTALL PAVING STONE BASE AND PAVING BINDER COURSE.
8. FINALIZE GRADING OF BUILDING PADS AND STABILIZE. BUILDING CONSTRUCTION MAY NOW BEGIN.
9. COMPLETE CONSTRUCTION AND STABILIZATION OF THE STORM DRAINAGE SYSTEM AND BIORETENTION LANDSCAPED ISLANDS PER THE GRADING AND DRAINAGE PLAN.
10. PRIOR TO WEARING COURSE PAVING, SIGNAGE AND STRIPING, ALL OTHER CONSTRUCTION MUST BE COMPLETED, INCLUDING BUT NOT LIMITED TO BUILDINGS, DRIVEWAYS, LANDSCAPING, GRADING AND CONCRETE WORK.
11. PLACE WEARING COURSE FOR ALL AREAS THAT ARE COMPLETED. BEGIN STRIPING OF PARKING AREAS AND ACCESS DRIVES.
12. CLEAR SITE OF DEBRIS AND ALL UNWANTED MATERIALS. THE RECYCLING AND DISPOSAL OF WASTES AND BUILDING MATERIALS SHALL BE DONE IN ACCORDANCE WITH THE DEPARTMENT'S SOLID WASTE MANAGEMENT REGULATIONS AT 25 PA CODE 260.1 ET SEQ., 271.1 ET SEQ. THE CONTRACTOR SHALL NOT ILLEGALLY BURY, DUMP, OR DISCHARGE ANY BUILDING MATERIAL OR WASTES AT THIS SITE.
13. WHEN NO WORK IS TO BE PERFORMED ON ANY AREAS, IT SHALL BE PROTECTED IMMEDIATELY BY TEMPORARY SEEDING, MULCHING OR SODDING.
14. INSTALL FINAL VEGETATION INCLUDING GRASSED AREAS AND LANDSCAPING IN ACCORDANCE WITH STANDARDS FOR PERMANENT STABILIZATION AND LANDSCAPING PLANS.
15. PERMANENT STABILIZATION SHALL BE DEFINED AS WHEN AN AREA HAS ACHIEVED A MINIMUM UNIFORM 70% PERENNIAL VEGETATIVE COVER OR OTHER PERMANENT NON-VEGETATIVE COVER WITH A DENSITY SUFFICIENT TO RESIST ACCELERATED SURFACE EROSION AND SUBSURFACE CHARACTERISTICS SUFFICIENT TO RESIST SLIDING AND OTHER MOVEMENTS.
16. UPON COMPLETION OF ALL EARTH DISTURBANCE ACTIVITIES AND PERMANENT STABILIZATION OF ALL DISTURBED AREAS, THE OWNER AND/OR OPERATORS SHALL CONTACT THE BUCKS COUNTY CONSERVATION DISTRICT FOR AN INSPECTION PRIOR TO THE REMOVAL/CONVERSION OF THE E&S BMP'S.
17. UPON COMPLETION OF ALL EARTH DISTURBANCE ACTIVITIES, REMOVAL OF ALL TEMPORARY BMP'S, INSTALLATION OF ALL PERMANENT PCSM BMP'S, AND PERMANENT STABILIZATION OF ALL DISTURBED AREAS, THE OWNER AND/OPERATORS SHALL CONTACT THE BUCKS COUNTY CONSERVATION DISTRICT FOR A FINAL INSPECTION.

REFER TO DETAIL SHEET CE-501 FOR EROSION & SEDIMENT CONTROL NOTES & DETAILS

BUILDING PAD SUBGRADE ELEVATIONS SHOWN ARE APPROXIMATE AND REPRESENT A 6" STONE BASE AND A 6" FLOOR SLAV. ACTUAL SUBGRADE ELEVATIONS SHOULD BE CONFIRMED WITH PROJECT ARCHITECT AND GEOTECHNICAL REPORT.

REFER TO DETAIL SHEET CE-501 FOR EROSION & SEDIMENT CONTROL NOTES & DETAILS

BUILDING PAD SUBGRADE ELEVATIONS SHOWN ARE APPROXIMATE AND REPRESENT A 6" STONE BASE AND A 6" FLOOR SLAB. ACTUAL SUBGRADE ELEVATIONS SHOULD BE CONFIRMED WITH PROJECT ARCHITECT AND GEOTECHNICAL REPORT.

IN AREAS OF EXCAVATION, ALL EXISTING UTILITIES TO REMAIN SHALL BE CHECKED FOR PROPER COVER AS REQUIRED BY THE UTILITY OWNER. SHOULD MINIMUM COVER NOT EXIST, THE CONTRACTOR SHALL BE RESPONSIBLE TO COORDINATE WITH SAID UTILITY COMPANY TO LOWER THE UTILITY TO PROVIDE PROPER COVER.

THE EXISTING SUBGRADE OF THE SUBSURFACE STORMWATER MANAGEMENT SYSTEM SHALL NOT BE COMPACTED OR SUBJECT TO EXCESSIVE CONSTRUCTION EQUIPMENT. CONTRACTOR TO USE LIGHTWEIGHT CONSTRUCTION EQUIPMENT AND OPERATE MACHINERY FROM OUTSIDE THE FOOTPRINT OF THE SUBSURFACE BASIN WHENEVER POSSIBLE. SEE CG-101, CE-102 AND CE-103 FOR LIMITS OF BASIN.

AFTER THE ENTIRE SITE IS STABILIZED, CONTRACTOR SHOULD ADJUST ALL GRADES, AND ALL PROPOSED AND EXISTING STORM DRAINAGE PIPES, TO MATCH WITH THOSE ON FINAL APPROVED SET OF PLANS (AS PER DRAWING CG-101).

GENERAL SITE NOTES:

1. THE CONTRACTOR SHALL FURNISH, INSTALL, TEST AND COMPLETE ALL WORK TO THE SATISFACTION OF THE ENGINEER AND OWNER IN ACCORDANCE WITH THE CONTRACT DOCUMENTS. THE CONTRACTOR IS SOLELY RESPONSIBLE FOR MEANS AND METHODS OF CONSTRUCTION; AS SUCH, THESE PLANS DO NOT COMPLETELY REPRESENT, NOR ARE THEY INTENDED TO REPRESENT, ALL SPECIFIC INSTRUCTIONS REQUIRED FOR SITEWORK CONSTRUCTION. THE CONTRACTOR IS RESPONSIBLE TO CONSTRUCT ALL IMPROVEMENTS DEPICTED ON THESE PLANS IN ACCORDANCE WITH ALL APPLICABLE RULES, REGULATIONS AND LAWS IN EFFECT AT THE TIME OF CONSTRUCTION.
2. THE CONTRACTOR SHALL ACCEPT THE SITE AS IS. THE CONTRACTOR SHALL ASSESS CONDITIONS, AND THE KIND, QUALITY AND QUANTITY OF WORK REQUIRED. THE OWNER AND ENGINEER MAKE NO GUARANTEE IN REGARD TO THE ACCURACY OF ANY INFORMATION THAT WAS OBTAINED DURING INVESTIGATIONS. THE CONTRACTOR SHALL: MAKE A THOROUGH SITE INSPECTION IN ORDER TO FIELD CHECK EXISTING SITE CONDITIONS; CORRELATE CONDITIONS WITH THE DRAWINGS; AND, RESOLVE ANY POSSIBLE CONSTRUCTION CONFLICTS WITH THE OWNER AND ENGINEER PRIOR TO COMMENCEMENT OF WORK. THE CONTRACTOR SHALL PERFORM ADDITIONAL TOPOGRAPHIC SURVEYS HE/SHE DEEMS NECESSARY, PROVIDED THEY ARE COORDINATED WITH THE OWNER. ANY CONDITIONS DETERMINED BY THE CONTRACTOR THAT DIFFER FROM THE INFORMATION SHOWN ON THE DRAWINGS THAT ARE NOT BROUGHT TO THE ATTENTION OF THE OWNER AND ENGINEER PRIOR TO THE START OF WORK SHALL NOT BE CONSIDERED GROUNDS FOR ADDITIONAL PAYMENT OR CHANGES TO THE CONTRACT DURATION, OR ANY OTHER CLAIMS AGAINST THE OWNER OR OWNER'S ENGINEER.
3. THE CONTRACTOR SHALL, WHEN HE/SHE DEEMS NECESSARY, PROVIDE A WRITTEN REQUEST FOR INFORMATION (RFI) TO THE OWNER AND/OR OWNER'S DESIGNATED REPRESENTATIVE, AND ENGINEER PRIOR TO THE CONSTRUCTION OF ANY SPECIFIC SITEWORK ITEM. THE (RFI) SHALL BE IN A FORM ACCEPTABLE TO OWNER AND/OR OWNER'S DESIGNATED REPRESENTATIVE, AND ENGINEER AND SHALL ALLOW FOR A MINIMUM OF THREE WORK DAYS FOR A WRITTEN REPLY. RFIS SHALL BE NUMBERED CONSECUTIVELY BY DATE SUBMITTED. THE CONTRACTOR SHALL BE SOLELY RESPONSIBLE FOR SITEWORK ITEMS CONSTRUCTED DIFFERENTLY THAN INTENDED OR AS DEPICTED ON THE PLANS.
4. INFORMATION RELATED TO ELEVATIONS AND PROPOSED UTILITIES (SUCH AS ROADWAY GRADES, INVERT ELEVATIONS, RIM ELEVATIONS, GRATE ELEVATIONS, BUILDING FINISHED FLOOR ELEVATIONS, ETC.) MAY BE FOUND IN MORE THAN ONE LOCATION IN THE CONTRACT DOCUMENTS. THE CONTRACTOR SHALL SUFFICIENTLY REVIEW ALL PLANS, PROFILES AND ANY OTHER INFORMATION IN THE CONTRACT DOCUMENTS FOR CONSISTENCY PRIOR TO BID. ANY INCONSISTENCIES OR DISCREPANCIES THAT ARE FOUND BY THE CONTRACTOR OR HIS ASSIGNS SHALL BE IMMEDIATELY BROUGHT TO THE ATTENTION OF THE OWNER AND ENGINEER IN WRITING, IN THE FORMAT OF AN RFI PRIOR TO BID.
5. THERE ARE ADDITIONAL NOTES, SPECIFICATIONS AND REQUIREMENTS CONTAINED THROUGHOUT THE PLAN SET AS WELL AS REFERENCES TO SPECIFICATIONS FROM APPLICABLE GOVERNING AUTHORITIES AND INDUSTRY STANDARDS. IT IS THE CONTRACTOR'S RESPONSIBILITY TO OBTAIN, REVIEW AND ADHERE TO ALL THESE DOCUMENTS.
6. CONTRACTOR IS SPECIFICALLY CAUTIONED THAT ALL CONSTRUCTION STAKEOUT FOR THIS PROJECT MUST BE COMPLETED FROM THE SITE SPECIFIC SURVEY CONTROL (HORIZONTAL AND VERTICAL) UPON WHICH THE DESIGN IS BASED. THE CONTRACTOR SHOULD NOT RELY ON OR RE-ESTABLISH SURVEY CONTROL BY GPS OR OTHER METHODS FOR USE IN CONSTRUCTION STAKEOUT OR ANY OTHER PURPOSE FOR THIS PROJECT. ANY DISCREPANCIES BETWEEN THE EXISTING HORIZONTAL OR VERTICAL DATA SHOWN ON THESE DRAWINGS AND THAT ENCOUNTERED IN THE FIELD MUST BE REPORTED TO THE DESIGN TEAM PRIOR TO CONSTRUCTION FOR RESOLUTION.

ACT 287 AS AMENDED

IT IS THE CONTRACTOR'S RESPONSIBILITY TO COMPLY WITH THE PENNSYLVANIA ACT 181 OF 2006 AND TO CONTACT THE "ONE CALL SYSTEM" THREE (3) WORKING DAYS (UNLESS OTHERWISE NOTED) PRIOR TO START OF CONSTRUCTION.

PENNSYLVANIA ONE CALL 1-800-242-1776
SERIAL NO. 20101102688

AQUA PENNSYLVANIA INC.
762 W LANCASTER AVE
BRYN MAWR, PA. 19010
(610) 562-1402

VERIZON PENNSYLVANIA
900 RACE STREET, 6TH FLOOR
PHILADELPHIA, PA 19107
(215) 351-8947

AT&T LOCAL SERVICES
2315 SALEM RD A10
CONYERS, GA. 33013
(770) 929-4584

COMCAST CABLE COMMUNICATIONS INC.
55 INDUSTRIAL DR
IVYLAND, PA. 18974
(215) 918-3137

PECO ENERGY COMPANY
400 PARK AVE
WARMINSTER, PA 18974
(215) 956-3121

BUCKS COUNTY WATER AND SEWER AUTHORITY
1275 ALMSHOUSE RD
WARRINGTON, PA 18976
(800) 222-2068

BENSALEM TOWNSHIP
3800 HULMEVILLE RD
BENSALEM, PA 19020
(215) 633-3733

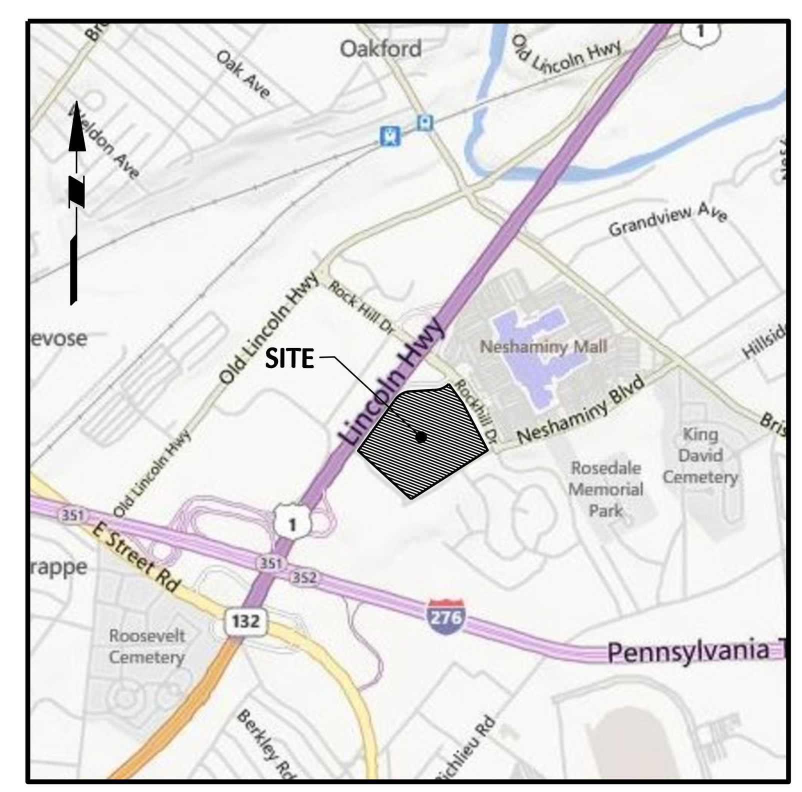

LOCATION MAP

1"=2000'

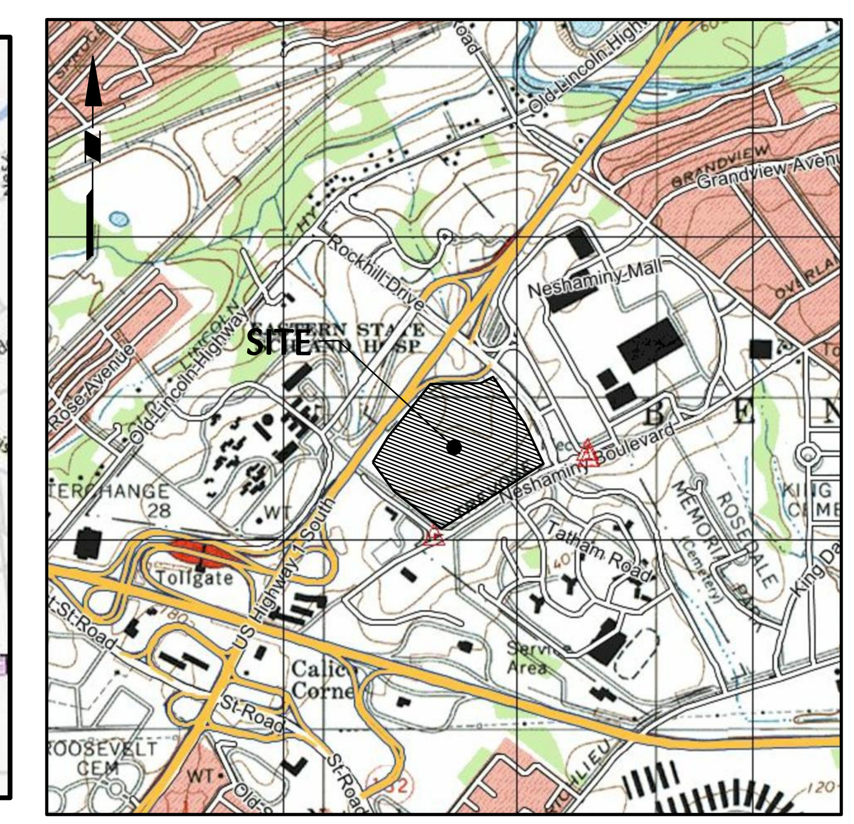

USGS MAP

1"=1500'

		LIMITATIONS (SEE "SOIL LIMITATIONS AND RESOLUTIONS" NOTES FOR RESOLUTIONS)										TYPICAL DEPTHS	
MAP SYMBOL	SOIL TYPE AND CHARACTERISTICS	CORROSIVE TO CONCRETE	CORROSIVE TO STEEL	DWELLINGS WITH BASEMENTS	DWELLINGS WITHOUT BASEMENTS	LAWNS, LANDSCAPING, AND GOLF FAIRWAYS	LOCAL ROADS AND STREETS	SHALLOW EXCAVATIONS	SMALL COMMERCIAL BUILDINGS	UNPAVED LOCAL ROADS AND STREETS	DEPTH TO WATER TABLE	DEPTH TO BEDROCK
GrB	GLENVILLE SILT LOAM, 3 TO 8 PERCENT SLOPES	MODERATE	HIGH	VERY LIMITED	SOMEWHAT LIMITED	SOMEWHAT LIMITED	VERY LIMITED	VERY LIMITED	SOMEWHAT LIMITED	VERY LIMITED	6" TO 36"	15" TO 30" TO FRAGIPAN 60" TO 99" TO PARALITHIC
CdB	CHESTER SILT LOAM, 3 TO 8 PERCENT SLOPES	HIGH	MODERATE	NOT LIMITED	NOT LIMITED	SOMEWHAT LIMITED	VERY LIMITED	SOMEWHAT LIMITED	SOMEWHAT LIMITED	VERY LIMITED	>80"	> 80"
UfB	UDORTHENTS, SCHIST AND GNEISS	MODERALTE	LOW	SOMEWHAT LIMITED	SOMEWHAT LIMITED	SOMEWHAT LIMITED	VERY LIMITED	SOMEWHAT LIMITED	SOMEWHAT LIMITED	SOMEWHAT LIMITED	60"	40" TO 72" TO PARALITHIC
UkB	URBAN LAND-CHESTER COMPLEX, 0-8% SLOPES	N/A	N/A	N/A	N/A	N/A	N/A	N/A	N/A	N/A	>80"	72" TO 99" TO PARALITHIC

LEGEND

PROPERTY LINE	
COMPOST FILTER SOCK	
CONST. FENCE	
LIMIT OF DISTURBANCE	
NPDES PERMIT BOUNDARY	
EXISTING WATER LINE	W
PROPOSED WATER LINE	
EXISTING SAN SEWER	S
PROPOSED SAN SEWER	
EXISTING STORM SEWER	D
EXISTING ELECTRIC	E
EXISTING TELEPHONE	T
EXISTING GAS	G
EXISTING CONTOUR	70
PROPOSED CONTOUR	70
CONSTRUCTION ENTRANCE	
INLET PROTECTION	
SOIL TYPE	UtB ©
SOIL BOUNDARY LINE	
PROPOSED STORM PIPE	
PROPOSED STORM INLET	
PROPOSED STORM MANHOLE	
DRAINAGE BOUNDARY	

PENNSYLVANIA ONE CALL SYSTEM, INC. 1-800-242-1776 STOP - CALL BEFORE YOU DIG!

CALL BEFORE YOU DIG IN PA, TOLL FREE 1 - 800 - 242-1776
FOR FREE MARKOUTS TO LOCATE UNDERGROUND UTILITIES
" IT'S THE LAW "

MAINTENANCE PROGRAM

1. UNTIL THE SITE IS STABILIZED, ALL EROSION AND SEDIMENT CONTROL BMPS MUST BE MAINTAINED PROPERLY. MAINTENANCE MUST INCLUDE INSPECTIONS OF ALL EROSION AND SEDIMENT CONTROL BMPS AFTER EACH RUNOFF EVENT AND ON A WEEKLY BASIS. ALL PREVENTATIVE AND REMEDIAL MAINTENANCE WORK, INCLUDING CLEANOUT, REPAIR, REPLACEMENT, RE-GRADING, RESEEDING, RE-MULCHING AND RE-NETTING MUST BE PERFORMED IMMEDIATELY. IF EROSION AND SEDIMENT CONTROL BMPS FAIL TO PERFORM AS EXPECTED, REPLACEMENT BMPS OR MODIFICATIONS OF THOSE INSTALLED WILL BE REQUIRED.
2. ANY SEDIMENT REMOVED FROM BMPS DURING CONSTRUCTION WILL BE RETURNED TO UPLAND AREAS ON SITE AND INCORPORATED INTO THE SITE GRADING.
3. A LOG SHOWING THE DATES THAT E&S BMPS WERE INSPECTED AS WELL AS ANY DEFICIENCIES FOUND AND THE DATE THAT THEY WERE CORRECTED SHALL BE MAINTAINED ON THE SITE AND BE MADE AVAILABLE TO THE BUCKS COUNTY CONSERVATION DISTRICT OR OTHER REGULATORY AGENCY OFFICIALS AT THE TIME OF INSPECTION.

Date	Description	No.
8/8/2016	REVISIONS PER TOWNSHIP AND COUNTY COMMENTS	1.

REVISIONS

BRIAN M. CONLON — DATE
PROFESSIONAL ENGINEER
PA Lic. No. PE061782

LANGAN
30 South 17th Street, Suite 1300, Philadelphia, PA 19103
T: 215.864.0640 F: 215.864.0671 www.langan.com
NEW JERSEY NEW YORK CONNECTICUT PENNSYLVANIA OHIO
VIRGINIA WASHINGTON DC FLORIDA NORTH DAKOTA CALIFORNIA
ABU DHABI ATHENS DOHA DUBAI ISTANBUL
Langan Engineering, Environmental, Surveying and Landscape Architecture, D.P.C.
Langan Engineering and Environmental Services, Inc.
Langan CT, Inc.
Langan International LLC
Collectively known as Langan

Project
THE MARKETPLACE AT NESHAMINY
BENSALEM TOWNSHIP
BUCKS COUNTY — PENNSYLVANIA

Drawing Title
SOIL EROSION AND SEDIMENT CONTROL PLAN - STAGE IV

Project No. 220048102	Drawing No. CE-104
Date 24 JUNE 2016	
Scale 1"=50'	
Drawn By TFH	
Checked By BMC	SHEET 23 OF 29

© 2014 Langan

GENERAL NOTES:

1. AT LEAST 7 DAYS BEFORE STARTING ANY EARTH DISTURBANCE ACTIVITIES, INCLUDING CLEARING AND GRUBBING, THE OWNER AND/OR OPERATOR SHALL INVITE ALL CONTRACTORS, THE LANDOWNER, ALL APPROPRIATE MUNICIPAL OFFICIALS, THE E&S PLAN PREPARER, PCSM PLAN PREPARER, THE LICENSED PROFESSIONAL RESPONSIBLE FOR OVERSIGHT OF CRITICAL STAGES OF IMPLEMENTATION OF THE PCSM PLAN, AND A REPRESENTATIVE OF THE BUCKS COUNTY CONSERVATION DISTRICT TO AN ON-SITE PRE-CONSTRUCTION MEETING.
2. AT LEAST 3 DAYS BEFORE STARTING ANY EARTH DISTURBANCE ACTIVITIES, ALL CONTRACTORS INVOLVED IN THOSE ACTIVITIES SHALL NOTIFY THE PENNSYLVANIA ONE CALL SYSTEM INCORPORATED AT 1-800-242-1776 FOR THE LOCATION OF EXISTING UNDERGROUND UTILITIES.
3. ALL SEDIMENT AND EROSION CONTROL PRACTICES ARE TO BE INSTALLED PRIOR TO ANY MAJOR SOIL DISTURBANCE IN THEIR PROPER SEQUENCE AND MAINTAINED UNTIL PERMANENT PROTECTION IS ESTABLISHED. SEE THE SEQUENCE OF CONSTRUCTION.
4. UPON COMPLETION OF ALL EARTH DISTURBANCE ACTIVITIES AND PERMANENT STABILIZATION OF ALL DISTURBED AREAS, THE OWNER AND/OR OPERATORS SHALL CONTACT THE BUCKS COUNTY CONSERVATION DISTRICT FOR AN INSPECTION PRIOR TO THE REMOVAL/CONVERSION OF THE E&S BMP'S.
5. UPON COMPLETION OF ALL EARTH DISTURBANCE ACTIVITIES, REMOVAL OF ALL TEMPORARY BMPS, INSTALLATION OF ALL PERMANENT PCSM BMPS, AND PERMANENT STABILIZATION OF ALL DISTURBED AREAS, THE OWNER AND/OPERATORS SHALL CONTACT THE BUCKS COUNTY CONSERVATION DISTRICT FOR A FINAL INSPECTION.
6. UPON TEMPORARY CESSATION OF AN EARTH DISTURBANCE ACTIVITY OR ANY STAGE OR PHASE OF AN ACTIVITY WHERE A CESSATION OF EARTH DISTURBANCE ACTIVITIES WILL EXCEED 4 DAYS, THE SITE SHALL BE IMMEDIATELY SEEDED, MULCHED, OR OTHERWISE PROTECTED FROM ACCELERATED EROSION AND SEDIMENTATION PENDING FUTURE EARTH DISTURBANCE ACTIVITIES.
7. PERMANENT STABILIZATION IS DEFINED AS A MINIMUM UNIFORM 70% PERENNIAL VEGETATIVE COVER OR OTHER PERMANENT NON-VEGETATIVE COVER WITH A DENSITY SUFFICIENT TO RESIST ACCELERATED SURFACE EROSION AND SUBSURFACE CHARACTERISTICS SUFFICIENT TO RESIST SLIDING AND OTHER MOVEMENTS.
8. TOPSOIL REQUIRED FOR THE ESTABLISHMENT OF VEGETATION SHALL BE STOCKPILED AT THE LOCATION(S) SHOWN ON THE PLAN DRAWINGS IN THE AMOUNT NECESSARY TO COMPLETE THE FINISH GRADING OF ALL EXPOSED AREAS THAT ARE TO BE STABILIZED BY VEGETATION. EACH STOCKPILE SHALL BE PROTECTED IN THE MANNER SHOWN ON THE PLAN DRAWINGS. TOPSOIL STOCKPILE HEIGHTS SHALL NOT EXCEED 35 FEET. STOCKPILE SIDE SLOPES MUST BE 2:1 OR FLATTER.
9. AREAS WHICH ARE TO BE TOPSOILED SHALL BE SCARIFIED TO A MINIMUM DEPTH OF 3 TO 5 INCHES -6 TO 12 INCHES ON COMPACTED SOILS -PRIOR TO PLACEMENT OF TOPSOIL. AREAS TO BE VEGETATED SHALL HAVE A MINIMUM 4 INCHES OF TOPSOIL IN PLACE PRIOR TO SEEDING AND MULCHING. FILL OUTSLOPES SHALL HAVE A MINIMUM OF 2 INCHES OF TOPSOIL.
10. TOPSOIL SHOULD NOT BE PLACED WHILE THE TOPSOIL OR SUBSOIL IS IN A FROZEN OR MUDDY CONDITION, WHEN THE SUBSOIL IS EXCESSIVELY WET, OR IN A CONDITION THAT MAY OTHERWISE BE DETRIMENTAL TO PROPER GRADING AND SEEDBED PREPARATION. COMPACTED SOILS SHOULD BE SCARIFIED 6 TO 12 INCHES ALONG CONTOUR WHENEVER POSSIBLE PRIOR TO SEEDING.
11. IMMEDIATELY AFTER EARTH DISTURBANCE ACTIVITIES CEASE, THE OPERATOR SHALL STABILIZE THE DISTURBED AREAS. DURING NON-GERMINATING PERIODS, MULCH MUST BE APPLIED AT THE SPECIFIED RATES. DISTURBED AREAS WHICH ARE NOT AT FINISHED GRADE AND WHICH WILL BE RE-DISTURBED WITHIN 1 YEAR MUST BE STABILIZED IN ACCORDANCE WITH THE TEMPORARY VEGETATIVE STABILIZATION SPECIFICATIONS. DISTURBED AREAS WHICH ARE AT FINAL GRADE OR WHICH WILL NOT BE RE-DISTURBED WITHIN 1 YEAR MUST BE STABILIZED IN ACCORDANCE WITH THE PERMANENT VEGETATIVE STABILIZATION SPECIFICATIONS.
12. AN EROSION CONTROL BLANKET WILL BE INSTALLED ON ALL DISTURBED SLOPES 3:1 OR STEEPER, ALL AREAS OF CONCENTRATED FLOWS, AND DISTURBED AREAS WITHIN 50' OF A SURFACE WATER.
13. PERMANENT VEGETATION TO BE SEEDED OR SODDED ON ALL EXPOSED AREAS WITHIN 4 DAYS AFTER FINAL GRADING. MULCH TO BE USED AT A RATE OF 1,200 LBS. PER 1,000 SQUARE YARDS FOR PROTECTION UNTIL SEEDING IS ESTABLISHED. SEE SEEDING MIXTURE BELOW.
14. ALL WORK TO BE DONE IN ACCORDANCE WITH THE PENNSYLVANIA EROSION AND SEDIMENT POLLUTION CONTROL PROGRAM MANUAL.
15. PRIOR TO ANY SITE GRADING, SOIL EROSION FACILITIES SHALL BE INSTALLED TO ALLOW THE MAJORITY OF STORM FLOW TO BE TRANSPORTED TO THE PROPOSED OUTLET WITHOUT ERODING THE SITE. SEE SEQUENCE OF CONSTRUCTION.
16. ALL INLETS NOT TO BE USED AS SEDIMENT TRAPS SHALL BE TEMPORARILY PROTECTED BY FILTERS PLACED IMMEDIATELY AFTER THEIR CONSTRUCTION. FILTERS SHALL REMAIN IN PLACE UNTIL THE SITE IS PERMANENTLY STABILIZED.
17. CONSTRUCTION FENCE SHALL BE INSTALLED WHERE INDICATED ON DEMOLITION PLANS. TREE PROTECTION FENCE SHALL BE INSTALLED AROUND ALL INDIVIDUAL TREES WITHIN THE LIMIT OF DISTURBANCE NOT MARKED FOR DEMOLITION.
18. ALL BUILDING MATERIALS AND WASTES SHALL BE REMOVED FROM THE SITE AND RECYCLED OR DISPOSED OF IN ACCORDANCE WITH THE DEPARTMENT'S SOLID WASTE MANAGEMENT REGULATIONS AT 25 PA. CODE 260.1 ET SEQ., 271.1., AND 287.1 ET SEQ. NO BUILDING MATERIALS OR WASTES OR UNUSED BUILDING MATERIALS SHALL BE BURNED, BURIED, DUMPED, OR DISCHARGED AT THE SITE.
19. THE CONTRACTOR WILL BE RESPONSIBLE FOR THE REMOVAL OF ANY EXCESS MATERIAL AND MAKE SURE THE SITE(S) RECEIVING THE EXCESS HAS AN APPROVED AND FULLY IMPLEMENTED EROSION AND SEDIMENT CONTROL PLAN THAT MEETS THE CONDITIONS OF CHAPTER 102 AND/OR OTHER STATE OR FEDERAL REGULATIONS.
20. CLEAN FILL IS DEFINED AS: UNCONTAMINATED, NON-WATER SOLUBLE, ON-DECOMPOSABLE, INERT, SOLID MATERIAL. THE TERM INCLUDES SOIL, ROCK, STONE, DREDGED MATERIAL, USED ASPHALT, AND BRICK, BLOCK OR CONCRETE FROM CONSTRUCTION AND DEMOLITION ACTIVITIES THAT IS SEPARATE FROM OTHER WASTE AND IS RECOGNIZABLE AS SUCH. THE TERM DOES NOT INCLUDE MATERIALS PLACED IN OR ON THE WATERS OF THE COMMONWEALTH UNLESS OTHERWISE AUTHORIZED. (THE TERM "USED ASPHALT" DOES NOT INCLUDE MILLED ASPHALT OR ASPHALT THAT HAS BEEN PROCESSED FOR RE-USE.).
21. ANY PLACEMENT OF CLEAN FILL THAT HAS BEEN AFFECTED BY A SPILL OR RELEASE OF A REGULATED SUBSTANCE MUST USE FORM FP-001 TO CERTIFY THE ORIGIN OF THE FILL MATERIAL AND THE RESULTS OF THE ANALYTICAL TESTING TO QUALIFY THE MATERIAL AS CLEAN FILL. FORM FP-001 MUST BE RETAINED BY THE OWNER OF THE PROPERTY RECEIVING THE FILL.
22. ENVIRONMENTAL DUE DILIGENCE MUST BE PERFORMED TO DETERMINE IF THE FILL MATERIALS ASSOCIATED WITH THE PROJECT QUALIFY AS CLEAN FILL. ENVIRONMENTAL DUE DILIGENCE IS DEFINED AS: INVESTIGATIVE TECHNIQUES, INCLUDING, BUT NOT LIMITED TO, VISUAL PROPERTY INSPECTIONS, ELECTRONIC DATA BASE SEARCHES, REVIEW OF PROPERTY OWNERSHIP, REVIEW OF PROPERTY USE HISTORY, SANBORN MAPS, ENVIRONMENTAL QUESTIONNAIRES, TRANSACTION SCREENS, ANALYTICAL TESTING, ENVIRONMENTAL ASSESSMENTS OR AUDITS. ANALYTICAL TESTING IS NOT A REQUIRED PART OF DUE DILIGENCE UNLESS VISUAL INSPECTION AND/OR REVIEW OF THE PAST LAND USE OF THE PROPERTY INDICATES THAT THE FILL MAY HAVE BEEN SUBJECTED TO A SPILL OR RELEASE OF A REGULATED SUBSTANCE. IF THE FILL MAY HAVE BEEN AFFECTED BY A SPILL OR RELEASE OF A REGULATED SUBSTANCE, IT MUST BE TESTED TO DETERMINE IF IT QUALIFIES AS CLEAN FILL. TESTING SHOULD BE PERFORMED IN ACCORDANCE WITH APPENDIX A OF THE DEPARTMENT'S POLICY "MANAGEMENT OF CLEAN FILL."

MAINTENANCE PROGRAM

THE CONTRACTOR WILL BE RESPONSIBLE FOR THE PROPER CONSTRUCTION STABILIZATION, AND MAINTENANCE OF ALL TEMPORARY EROSION AND SEDIMENTATION CONTROL MEASURES AND RELATED ITEMS INCLUDED WITHIN THIS PLAN. THE CONTRACTOR WILL ALSO BE RESPONSIBLE FOR THE PROPER CONSTRUCTION AND STABILIZATION OF PERMANENT CONTROL MEASURES AND RELATED ITEMS INCLUDED WITHIN THIS PLAN.

UNTIL THE SITE IS STABILIZED, ALL EROSION AND SEDIMENT CONTROL BMPS MUST BE MAINTAINED PROPERLY. MAINTENANCE MUST INCLUDE INSPECTIONS OF ALL EROSION AND SEDIMENT CONTROL BMPS AFTER EACH RUNOFF EVENT AND ON A WEEKLY BASIS. ALL PREVENTATIVE AND REMEDIAL MAINTENANCE WORK, INCLUDING CLEANOUT, REPAIR, REPLACEMENT, RE-GRADING, RESEEDING, RE-MULCHING AND RE-NETTING MUST BE PERFORMED IMMEDIATELY. IF EROSION AND SEDIMENT CONTROL BMPS FAIL TO PERFORM AS EXPECTED, REPLACEMENT BMPS OR MODIFICATIONS OF THOSE INSTALLED WILL BE REQUIRED.

ANY SEDIMENT REMOVED FROM BMPS DURING CONSTRUCTION WILL BE RETURNED TO UPLAND AREAS ON SITE AND INCORPORATED INTO THE SITE GRADING.

A LOG SHOWING THE DATES THAT E&S BMPS WERE INSPECTED AS WELL AS ANY DEFICIENCIES FOUND AND THE DATE THAT THEY WERE CORRECTED SHALL BE MAINTAINED ON THE SITE AND BE MADE AVAILABLE TO THE BUCKS COUNTY CONSERVATION DISTRICT OR OTHER REGULATORY AGENCY OFFICIALS AT THE TIME OF INSPECTION.

SOIL SEDIMENT REMOVED FROM ANY TEMPORARY CONTROL MEASURE DURING REGULAR MAINTENANCE WILL BE INCORPORATED BACK INTO THE EARTHWORK AS FILL ON THE SITE. SOIL SEDIMENT MATERIAL SHALL BE DISTRIBUTED ON-SITE WITHOUT CHANGING DRAINAGE PATTERNS DURING A SPECIFIC CONSTRUCTION STAGE. COMPOST SOCK AND/OR SILT FENCE INSTALLED ON THE PROJECT SITE SHALL BE MAINTAINED AS FOLLOWS:

1. THE COMPOST SOCKS WILL BE INSPECTED ONCE A WEEK OR AFTER EVERY STORM EVENT, WHICHEVER COMES FIRST. ANY NECESSARY REPAIRS WILL BE MADE IMMEDIATELY.
2. ACCUMULATED SEDIMENTS WILL BE REMOVED AS REQUIRED TO KEEP THE FENCE FUNCTIONAL. DEPOSITS WILL BE REMOVED WHERE ACCUMULATIONS REACH ONE-HALF THE ABOVE-GROUND HEIGHT OF THE FENCE.
3. ADDITIONAL COMPOST SOCKS CAN BE ADDED BEHIND OR ABOVE EXISTING SOCK IF CONDITIONS WARRANT.
4. ANY MANUFACTURER'S RECOMMENDATIONS WILL BE ADHERED TO FOR REPLACING COMPOST SOCKS DUE TO WEATHERING.

AT THE END OF EACH CONSTRUCTION DAY, ANY SEDIMENT DEPOSITED ON PUBLIC ROADWAYS, WILL BE REMOVED AND RETURNED TO THE CONSTRUCTION SITE. WASHING THE ROADWAY WITH WATER WILL NOT BE PERMITTED.

THE OWNER WILL BE RESPONSIBLE FOR THE MAINTENANCE OF ALL PERMANENT CONTROL MEASURES.

RECYCLING AND DISPOSAL OF WASTES AND BUILDING MATERIALS SHALL BE DONE IN ACCORDANCE WITH THE SOLID WASTE MANAGEMENT REGULATIONS IN 25 PA CODE 260.1 ET SEQ., 271.1 ET SEQ. THE CONTRACTOR SHALL NOT ILLEGALLY BURY, DUMP, OR DISCHARGE ANY BUILDING MATERIAL OR WASTES AT THIS SITE.

PROJECT WASTES MAY INCLUDE CONCRETE, ASPHALT, TOPSOIL DETERGENTS, PAINTS, CLEANING SOLVENTS, PESTICIDES, WOOD SCRAPS, FERTILIZERS AND PETROLEUM BASED PRODUCTS.

STABILIZATION SPECIFICATIONS

1. UPON TEMPORARY CESSATION OF AN EARTH DISTURBANCE ACTIVITY OR ANY STAGE OR PHASE OF AN ACTIVITY WHEREAS CESSATION OF EARTH DISTURBANCE ACTIVITIES WILL EXCEED 4 DAYS, THE SITE SHALL BE IMMEDIATELY SEEDED,MULCHED, OR OTHERWISE PROTECTED FROM ACCELERATED EROSION AND SEDIMENTATION PENDING FUTURE EARTH DISTURBANCE ACTIVITIES.
2. PERMANENT STABILIZATION IS DEFINED AS A MINIMUM UNIFORM 70% PERENNIAL VEGETATIVE COVER OR OTHER PERMANENT NON-VEGETATIVE COVER WITH A DENSITY SUFFICIENT TO RESIST ACCELERATED SURFACE EROSION AND SUBSURFACE CHARACTERISTICS SUFFICIENT TO RESIST SLIDING AND OTHER MOVEMENTS.
3. TOPSOIL REQUIRED FOR THE ESTABLISHMENT OF VEGETATION SHALL BE STOCKPILED AT THE LOCATION(S) SHOWN ON THE PLAN DRAWINGS IN THE AMOUNT NECESSARY TO COMPLETE THE FINISH GRADING OF ALL EXPOSED AREAS THAT ARE TO BE STABILIZED BY VEGETATION. EACH STOCKPILE SHALL BE PROTECTED IN THE MANNER SHOWN ON THE PLAN DRAWINGS. TOPSOIL STOCKPILE HEIGHTS SHALL NOT EXCEED 35 FEET. STOCKPILE SIDE SLOPES MUST BE 2:1 OR FLATTER.
4. AREAS WHICH ARE TO BE TOPSOILED SHALL BE SCARIFIED TO A MINIMUM DEPTH OF 3 TO 5 INCHES – 6 TO 12 INCHES ON COMPACTED SOILS – PRIOR TO PLACEMENT OF TOPSOIL. AREAS TO BE VEGETATED SHALL HAVE A MINIMUM 4 INCHES OF TOPSOIL IN PLACE PRIOR TO SEEDING AND MULCHING. FILL OUTSLOPES SHALL HAVE A MINIMUM OF 2 INCHES OF TOPSOIL.
5. TOPSOIL SHOULD NOT BE PLACED WHILE THE TOPSOIL OR SUBSOIL IS IN A FROZEN OR MUDDY CONDITION, WHEN THE SUBSOIL IS EXCESSIVELY WET, OR IN A CONDITION THAT MAY OTHERWISE BE DETRIMENTAL TO PROPER GRADING AND SEEDBED PREPARATION. COMPACTED SOILS SHOULD BE SCARIFIED 6 TO 12 INCHES ALONG CONTOUR WHENEVER POSSIBLE PRIOR TO SEEDING.
6. IMMEDIATELY AFTER EARTH DISTURBANCE ACTIVITIES CEASE, THE OPERATOR SHALL STABILIZE THE DISTURBED AREAS. DURING NON-GERMINATING PERIODS, MULCH MUST BE APPLIED AT THE SPECIFIED RATES. DISTURBED AREAS WHICH ARE NOT AT FINISHED GRADE AND WHICH WILL BE RE-DISTURBED WITHIN 1 YEAR MUST BE STABILIZED IN ACCORDANCE WITH THE TEMPORARY VEGETATIVE STABILIZATION SPECIFICATIONS. DISTURBED AREAS WHICH ARE AT FINAL GRADE OR WHICH WILL NOT BE RE-DISTURBED WITHIN 1 YEAR MUST BE STABILIZED IN ACCORDANCE WITH THE PERMANENT VEGETATIVE STABILIZATION SPECIFICATIONS.
7. AN EROSION CONTROL BLANKET WILL BE INSTALLED ON ALL DISTURBED SLOPES 3:1 OR STEEPER, ALL AREAS OF CONCENTRATED FLOWS, AND DISTURBED AREAS WITHIN 50' OF A SURFACE WATER.

INSPECTION SCHEDULE OF PROPOSED BMP'S

COMPOST FILTER SOCK – INSPECT COMPOST FILTER SOCKS WEEKLY AND AFTER EACH RUNOFF EVENT. DAMAGED SOCK SHALL BE REPAIRED ACCORDING TO MANUFACTURER'S SPECIFICATIONS OR REPLACED WITHIN 24 HOURS OF INSPECTION. PHOTODEGRADABLE SOCKS SHALL BE REPLACED AFTER 1 YEAR. FOLLOW MANUFACTUERER'S RECOMMENDATIONS. COMPLETE REPORT FOR ALL INSPECTIONS AND/OR MAINTENANCE AS CONDUCTED.

ROCK CONSTRUCTION ENTRANCE – INSPECT ROCK CONSTRUCTION ENTRANCE WEEKLY AND AFTER EACH RUNOFF EVENT. ROCK CONSTRUCTION ENTRANCE THICKNESS SHALL BE CONSTANTLY MAINTAINED TO THE SPECIFIED DIMENSIONS BY ADDING ROCK. A STOCKPILE SHALL BE MAINTAINED ON SITE FOR THIS PURPOSE. ALL SEDIMENT DEPOSITED ON PAVED ROADWAYS SHALL BE REMOVED AND RETURNED TO THE CONSTRUCTION SITE IMMEDIATELY. IF EXCESSIVE AMOUNTS OF SEDIMENT ARE BEING DEPOSITED ON THE ROADWAY, EXTEND LENGTH OF ROCK CONSTRUCTION ENTRANCE BY 50 FOOT INCREMENTS UNTIL CONDITION IS ALLEVIATED OR INSTALL WASH RACK. WASHING THE ROADWAY OR SWEEPING THE DEPOSITS INTO ROADWAY DITCHES, SEWERS, CULVERT, OR OTHER DRAINAGE COURSES IS NOT ACCEPTABLE. COMPLETE REPORT FOR ALL INSPECTIONS AND/OR MAINTENANCE AS CONDUCTED.

PUMPED WATER FILTER BAG – INSPECT PUMPED WATER FILTER BAGS WEEKLY AND AFTER EACH RUNOFF EVENT. FILTER BAGS SHALL BE REPLACED WHEN THEY BECOME HALF FULL OF SEDIMENT. FILTER BAGS SHALL BE INSPECTED DAILY. IF ANY PROBLEM IS DETECTED, PUMPING SHALL CEASE IMMEDIATELY AND NOT RESUME UNTIL THE PROBLEM IS CORRECTED. COMPLETE REPORT FOR ALL INSPECTIONS AND/OR MAINTENANCE AS CONDUCTED.

STONE AND CONCRETE BLOCK INLET PROTECTION – INSPECT STONE AND CONCRETE BLOCK INLET PROTECTION WEEKLY AND AFTER EACH RUNOFF EVENT. ROLLED EARTHEN BERM IN ROADWAY SHALL BE PROVIDED AND MAINTAINED IMMEDIATELY DOWN GRADIENT OF THE PROTECTED INLET UNTIL ROADWAY IS STONED ROAD SUBBASE BERM ON ROADWAY SHALL BE MAINTAINED UNTIL ROADWAY IS PAVED. EARTHERN BERM IN CHANNEL SHALL BE MAINTAINED UNTIL PERMANENT STABILIZATION IS COMPLETED OR TO REMAIN PERMANENTLY. SEDIMENT SHALL BE REMOVED WHEN IT REACHES HALF THE HEIGHT OF THE STONE. DAMAGED OR CLOGGED INSTALLATIONS SHALL BE REPAIRED OR REPLACED IMMEDIATELY. COMPLETE REPORT FOR ALL INSPECTIONS AND/OR MAINTENANCE AS CONDUCTED.

STANDARD SILT FENCE – SILT FENCE SHOULD BE INSPECTED WEEKLY AND AFTER EACH RUNOFF EVENT. NEEDED REPAIRS SHOULD BE INITIATED IMMEDIATELY AFTER INSPECTION. COMPLETE REPORT FOR ALL INSPECTIONS AND/OR MAINTENANCE AS CONDUCTED.

UTILITY INSTALLATION AND TRENCH EXCAVATION GUIDELINES

1. CONSTRUCTION REQUIREMENTS –
   A. LIMIT ADVANCE CLEARING AND GRUBBING OPERATIONS TO A DISTANCE EQUAL TO TWO TIMES THE LENGTH OF PIPE INSTALLATION THAT CAN BE COMPLETED IN ONE DAY.
   B. WORK CREWS AND EQUIPMENT FOR TRENCHING, PLACEMENT OF PIPE, PLUG CONSTRUCTION AND BACKFILLING WILL BE SELF CONTAINED AND SEPARATE FROM CLEARING AND GRUBBING AND SITE RESTORATION AND STABILIZATION OPERATIONS.
   C. LIMIT DAILY TRENCH EXCAVATION TO THE LENGTH OF PIPE PLACEMENT, PLUG INSTALLATION AND BACKFILLING THAT CAN BE COMPLETED THE SAME DAY.
   D. WATER THAT ACCUMULATES IN THE OPEN TRENCH WILL BE COMPLETELY REMOVED BY PUMPING, AS REQUIRED, TO A FACILITY FOR REMOVAL OF SEDIMENT IN ACCORDANCE WITH "PADEP" GUIDELINES.
   E. ON THE DAY FOLLOWING PIPE PLACEMENT AND TRENCH BACKFILLING, THE DISTURBED AREA WILL BE GRADED TO BE FINAL CONTOURS AND APPROPRIATE TEMPORARY EROSION AND SEDIMENT POLLUTION CONTROL MEASURES/FACILITIES WILL BE INSTALLED. SEEDING AND MULCHING OF ALL DISTURBED AREAS WILL BE DONE AT THE END OF EACH WEEK.
2. BACKFILLING – AFTER THE PIPE AND ITS APPURTENANCES HAVE BEEN SATISFACTORILY INSTALLED AND COVERED, THE TRENCH SHALL BE BACKFILLED IN SIX (6) INCH LAYERS AND IN SUCH A MANNER AS NOT TO DISTURB THE PIPE. HOWEVER, 8-INCH LAYERS WILL BE PERMITTED WHEN USING VIBRATORY COMPACTION EQUIPMENT PROVIDED BACKFILL MATERIAL IS SUITABLE FOR COMPACTION TESTING. EACH LAYER OF BACKFILL SHALL BE THOROUGHLY COMPACTED WITH MECHANICAL TAMPERS OR BY OTHER ACCEPTABLE METHODS, FOR THE FULL TRENCH WIDTH. THE BACKFILL SHALL BE COMPACTED TO NOT LESS THAN 100% OF THE DETERMINED DRY WEIGHT DENSITY OF THE BACKFILL MATERIAL.
3. EXCEPTIONS – IN CERTAIN CASES TRENCHES CANNOT BE BACKFILLED UNTIL THE PIPE IS HYDROSTATIC ALLY TESTED, OR ANCHORS AND OTHER PERMANENT FEATURES ARE INSTALLED IN THESE CASES, ALL OF THE REQUIREMENTS LISTED UNDER ITEM 1 WILL REMAIN IN EFFECT WITH THE FOLLOWING EXCEPTIONS:
   A. DAILY BACKFILLING OF THE TRENCH MAY BE DELAYED FOR SIX DAYS. ALL PRESSURE TESTING AND THE COMPLETE BACKFILLING OF THE OPEN TRENCH MUST BE COMPLETED BY THE SEVENTH WORKING DAY.
   B. IF DAILY BACKFILLING IS DELAYED, THE DISTURBED AREA WILL BE GRADED TO FINAL CONTOURS APPROPRIATE TEMPORARY EROSION AND SEDIMENT CONTROL MEASURES/FACILITIES WILL BE INSTALLED, AND THE AREAS SEEDED AND MULCHED WITHIN THE NEXT TWO CALENDAR DAYS.
   C. SIDES OF TRENCHES SHALL BE KEPT AS NEARLY VERTICAL AS POSSIBLE, AND THE TRENCHES SHALL BE EXCAVATED TRUE TO THE LINE SO THAT A CLEAR SPACE EIGHT (8") INCHES IN WIDTH IS PROVIDED ON EACH SIDE OF THE BARREL OF THE PIPE TO A HEIGHT NOT LESS THAN ONE (1) FOOT ABOVE THE TOP OF THE PIPE. IF SHEETING IS REQUIRED AT THE LEVEL OF THE PIPE, THE DIMENSIONS IN THE FOREGOING SENTENCE SHALL BE APPLICABLE TO THE INSIDE FACES OF THE SHEETING.
   D. THE TOWNSHIP SHALL HAVE THE RIGHT TO LIMIT THE AMOUNT OF TRENCH OPENED IN ADVANCE OF PIPE LAYING AND THE AMOUNT OF PIPE LAID IN ADVANCE OF BACKFILLING, BUT IN NO CASE SHALL MORE THAN FOUR HUNDRED (400) FEET OF TRENCH BE OPENED AT ANY ONE PLACE IN ADVANCE OF THE COMPLETED PIPE. THE TRENCH SHALL NOT BE OPENED FOR A DISTANCE OF MORE THAN FIVE HUNDRED (500) FEET AT ANY ONE TIME.
   E. NO TRENCH WITHIN A PUBLIC STREET SHALL BE LEFT UNCOVERED AT THE CLOSE OF THE WORK DAY. NO OTHER TRENCH SHALL BE LEFT UNCOVERED FOR MORE THAN FIVE CONSECUTIVE WORKING DAYS. STEEL PLATES OF ADEQUATE STRENGTH MAY BE USED TO COVER OPENINGS WITH THE PRIOR APPROVAL OF THE TOWNSHIP ENGINEER.
   F. PRIOR TO PERFORMING ANY BLASTING, THE CONTRACTOR MUST OBTAIN ALL NECESSARY LICENSES AND PERMITS. PROTECTIVE MEASURES MUST BE USED TO INSURE SAFETY TO ADJACENT PROPERTY.
   G. THE CONTRACTOR SHALL BE SOLELY RESPONSIBLE FOR INJURY TO PERSONS OR PROPERTY THAT MAY RESULT FROM THE USE OF EXPLOSIVES. ALL BLASTING SHALL BE PERFORMED UNDER THE SUPERVISION OF A LICENSED BLASTER, AND SHALL BE SUBJECT TO STATE, COUNTY AND LOCAL REGULATIONS.
   H. WHEN PIPE IS TO BE INSTALLED IN FILL, THE EMBANKMENT SHALL BE CONSTRUCTED TO AT LEAST ONE (1) FOOT ABOVE THE PROPOSED TOP OF THE PIPE. THE EMBANKMENT SHALL THEN BE EXCAVATED TO THE PROPER FORM AND GRADE, AND THE PIPE INSTALLED. THE EMBANKMENT SHALL THEN BE CONSTRUCTED TO NOT LESS THAN THREE AND ONE HALF (3 1/2) FEET ABOVE THE TOP OF THE PIPE.

STANDARD EROSION AND SEDIMENTATION CONTROL PLAN NOTES

1. ONLY LIMITED DISTURBANCE WILL BE PERMITTED TO PROVIDE ACCESS TO (CONSTRUCT SEDIMENT TRAPS, AND DIVERSION TERRACES) FOR GRADING AND ACQUIRING BORROW TO CONSTRUCT THOSE CONTROLS.
2. EROSION AND SEDIMENTATION CONTROLS MUST BE CONSTRUCTED, STABILIZED AND FUNCTIONAL BEFORE SITE DISTURBANCE WITHIN THE TRIBUTARY AREAS OF THOSE CONTROLS.
3. AFTER FINAL SITE STABILIZATION HAS BEEN ACHIEVED, TEMPORARY EROSION AND SEDIMENTATION CONTROLS MUST BE REMOVED. AREAS DISTURBED DURING REMOVAL OF THE CONTROLS MUST BE STABILIZED IMMEDIATELY.
4. AT THE END OF EACH WORKING DAY, ANY SEDIMENT TRACKED OR CONVEYED ONTO A PUBLIC ROADWAY WILL BE REMOVED AND REDEPOSITED ONTO THE CONSTRUCTION SITE. REMOVAL CAN BE COMPLETED THROUGH USE OF MECHANICAL OR HAND TOOLS, BUT MUST NEVER BE WASHED OFF THE ROAD SURFACE BY THE USE OF WATER.
5. SEDIMENT REMOVED FROM E&SPC CONTROLS & FACILITIES SHALL BE DISPOSED OF IN LANDSCAPED AREAS OUTSIDE OF STEEP SLOPES, WETLANDS, FLOODPLAINS OR DRAINAGE SWALES AND IMMEDIATELY STABILIZED OR REPLACED IN TOPSOIL STOCKPILES.
6. ALL PUMPING OS SEDIMENT-LADEN WATER SHALL BE THROUGH A DIRT BAG FILTRATION DEVICES, OR EQUIVALENT SEDIMENT REMOVAL FACILITY, OVER NON-DISTURBED VEGETATED AREAS. DISCHARGE POINTS SHOULD BE ESTABLISHED TO PROVIDE FOR MAXIMUM DISTANCE TO ACTIVE WATERWAYS.
7. ALL EXCAVATION FOR UTILITY LINE INSTALLATION SHALL BE LIMITED TO THE AMOUNT THAT CAN BE EXCAVATED INSTALLED BACKFILLED AND STABILIZED WITHIN ONE WORKING DAY. ALL EXCAVATED MATERIAL SHALL BE DEPOSITED ON THE UPSLOPE SIDE OF THE TRENCH.
8. SHOULD UNFORESEEN EROSIVE CONDITIONS DEVELOP DURING CONSTRUCTION, THE CONTRACTOR SHALL TAKE ACTION TO REMEDY SUCH CONDITIONS AND TO PREVENT DAMAGE TO ADJACENT PROPERTIES AS A RESULT OF INCREASED RUNOFF AND/OR SEDIMENT DISPLACEMENT. STOCKPILES OF WOOD CHIPS, HAY BALES, CRUSHED STONE AND OTHER MULCHES SHALL BE HELD IN READINESS TO DEAL IMMEDIATELY WITH EMERGENCY PROBLEMS OF EROSION.
9. THE CONTRACTOR IS ADVISED TO BECOME THOROUGHLY FAMILIAR WITH THE PROVISIONS OF THE APPENDIX 64, EROSION CONTROL RULES AND REGULATIONS, TITLE 25, PART 1, DEPARTMENT OF ENVIRONMENTAL PROTECTION, SUBPART C, PROTECTION OF NATURAL RESOURCES, ARTICLE III, WATER RESOURCES, CHAPTER 102, EROSION CONTROL.
10. A COPY OF THIS EROSION AND SEDIMENTATION CONTROL REPORT AND PLANS MUST BE POSTED AT THE CONSTRUCTION SITE.
11. STRAW BALE BARRIERS SHOULD NOT BE USED FOR MORE THAN 3 MONTHS.
12. STRAW BALE BAFFLERS MUST BE PLACED AT LEVEL GRADE. BOTH ENDS OF THE BARRIER MUST BE EXTENDED AT LEAST 10' UPSLOPE AT 45 DEGREES TO THE MAIN BARRIER ALIGNMENT.
13. SEDIMENT MUST BE REMOVED WHEN ACCUMULATIONS REACH 1/3 THE ABOVE GROUND HEIGHT OF THE BARRIER.
14. ANY SECTION OF STRAW BALE BARRIER, WHICH HAS BEEN UNDERMINED OR TOPPED, MUST BE IMMEDIATELY REPLACED WITH A ROCK FILTER OUTLET. (SEE ROCK FILTER OUTLET DETAIL).
15. STORMWATER INLETS, WHICH DO NOT DISCHARGE TO SEDIMENT TRAPS OR BASINS, MUST BE PROTECTED UNTIL THE TRIBUTARY AREAS ARE STABILIZED.
16. SEDIMENT MUST BE REMOVED FROM INLET PROTECTION AFTER EACH STORM EVENT, OR WHEN THE DISTANCE BETWEEN THE GRATE AND THE SEDIMENT LEVEL IS REDUCED TO 18".
17. UNTIL THE SITE HAS ACHIEVED FINAL STABILIZATION THE OWNER AND/OR CONTRACTOR SHALL PROPERLY IMPLEMENT, OPERATE AND MAINTAIN ALL THE BEST MANAGEMENT PRACTICES. MAINTENANCE SHALL INCLUDE INSPECTIONS OF ALL EROSION AND SEDIMENTATION CONTROL AFTER EACH RUNOFF EVENT AND ON A WEEKLY BASIS. ALL PREVENTATIVE AND REMEDIAL MAINTENANCE WORK, INCLUDING CLEAN OUT, REPAIR, REPLACEMENT, REGRADING, RESEEDING, REMULCHING, AND RENETTING, MUST BE PERFORMED IMMEDIATELY.
18. AN AREA SHALL BE CONSIDERED TO HAVE ACHIEVED FINAL STABILIZATION WHEN IT HAS A MINIMUM UNIFORM 70% PERENNIAL VEGETATIVE COVER OR OTHER PERMANENT NON-VEGETATIVE COVER WITH A DENSITY SUFFICIENT TO RESIST ACCELERATED SURFACE EROSION AND SUBSURFACE CHARACTERISTICS SUFFICIENT TO RESIST SLIDING AND OTHER MOVEMENTS.
19. SEDIMENT MUST BE REMOVED WHEN ACCUMULATIONS REACH 1/3 THE HEIGHT OF THE ROCK FILTER OUTLETS.
20. THE HEIGHT OF THE ROCK FILTER SHOULD EQUAL 5/6 THE HEIGHT OF THE STRAW BALES OR FILTER.
21. THE OPERATOR SHALL REMOVE FROM THE SITE, RECYCLE OR DISPOSE OF ALL BUILDING MATERIALS AND WASTE IN ACCORDANCE WITH THE DEPARTMENTS SOLID WASTE MANAGEMENT REGULATIONS AT 25 PA CODE 260.1 ET SEQ, 271.1 ET SEQ, AND 287.1 ET SEQ. THE CONTRACTOR SHALL NOT ILLEGALLY BURY, DUMP, OR DISHCHARGE ANY BUILDING MATERIAL OR WASTE AT THE SITE.
22. THE CONTRACTOR SHALL ENSURE THAT ANY FILL EXPORTED FROM THE SITE WILL BE CERTIFIED AS CLEAN FILL.

SOIL LIMITATIONS AND RESOLUTIONS:

THE SITE SOILS LOCATED ON OR ADJACENT TO THE PROJECT SITE CONSIST OF THE FOLLOWING:

- CHESTER SILT LOAM (CdB), 3-8% SLOPES, 6-8.25 FEET TYPICAL DEPTH TO WATER TABLE AND 6.58 FEET TYPICAL DEPTH TO PARALITHIC BEDROCK.
  - O LIMITATIONS INCLUDE CORROSIVE TO CONCRETE, CORROSIVE TO STEEL, LAWNS AND GOLF FAIRWAYS, LOCAL ROADS AND STREETS, SHALLOW EXCAVATIONS, SMALL COMMERCIAL BUILDINGS, AND UNPAVED LOCAL ROADS AND STREETS.
- UDORTHENTS, SCHIST AND GNEISS, (UfB), > 5 FEET TYPICAL DEPTH TO WATER TABLE AND 3.3 TO 6 FEET TYPICAL DEPTH TO PARALITHIC BEDROCK.
  - O LIMITATIONS INCLUDE CORROSIVE TO CONCRETE, DWELLINGS WITH BASEMENTS, DWELLINGS WITHOUT BASEMENTS, LAWNS AND GOLF FAIRWAYS, LOCAL ROADS AND STREETS, SHALLOW EXCAVATIONS, SMALL COMMERCIAL BUILDINGS, AND UNPAVED LOCAL ROADS AND STREETS.
- GLENNVILLE SILT LOAM (GrB), 3-8% SLOPES, 1.66 FEET TYPICAL DEPTH TO WATER TABLE, 1.25 TO 2.5 TYPICAL DEPTH TO FAGINPAN BEDROCK, AND 5 TO 8.25 FEET TYPICAL DEPTH TO PARALITHIC BEDROCK.
  - O LIMITATIONS INCLUDE CORROSIVE TO CONCRETE, CORROSIVE TO STEEL, DWELLINGS WITH BASEMENTS, DWELLINGS WITHOUT BASEMENTS, LAWNS AND GOLF FAIRWAYS, LOCAL ROADS AND STREETS, SHALLOW EXCAVATIONS, SMALL COMMERCIALS BUILDINGS, AND UNPAVED LOCAL ROADS AND STREETS.
- URBAN LAND, CHESTER COMPLEX (UkB), 0-8% SLOPES, > 6.5 FEET TYPICAL DEPTH TO WATER TABLE, 0.83 TO 8.25 TYPICAL DEPTH TO LITHIC BEDROCK, AND 6 TO 8.25 FEET TYPICAL DEPTH TO PARALITHIC BEDROCK.
  - O THIS URBAN LAND DESIGNATION DOES NOT LIST LIMITATIONS BECAUSE IT IS A PREVIOUSLY DISTURBED AREA THAT WAS PREPARED FOR USE AS STRUCTURAL FILL BELOW BUILDINGS AND PAVING.

THE RESOLUTIONS FOR SOIL LIMITATIONS ARE AS FOLLOWS:

- CHESTER SILT LOAM (CdB)
  - O HPDE AND PVC PIPING IS PROPOSED. EXTENSIVE LANDSCAPING IS NOT PROPOSED. NO LOCAL ROADS AND STREETS, BOTH PAVED AND UNPAVED, ARE PROPOSED. BUILDINGS WITHIN THIS CLASSIFICATION ARE NOT PROPOSED TO HAVE BASEMENTS.
- UDORTHENTS, SCHIST AND GNEISS (UfB)
  - O THIS SOIL TYPE IS LOCATED TO THE NORTH OF THE SITE. THE PROPOSED PROJECT INCLUDES MINIMAL DISTURBANCE IN THIS CLASSIFICATION, HOWEVER, THE PROPOSED IMPROVEMENTS WILL BE CONSTRUCTED IN APPROVED FILL.
- GLENVILLE SILT LOAM (GrB)
  - O AREAS OF DEVELOPMENT WITHIN THE CLASSIFICATION OF GLENVILLE SILT LOAM WILL CONSIST OF APPROVED FILL FOR THE PROPOSED APPLICATIONS.
- URBAN LAND-CHESTER COMPLEX (UkB)
  - O THIS SOIL DOES NOT INCLUDE THE TYPE OF SOIL LIMITATIONS ASSOCIATED WITH NATIVE SOILS BECAUSE IT WAS PREVIOUSLY PREPARED AS STRUCTURAL FILL AND THE PROPOSED PROJECT DOES NOT INCLUDE ANY DISTURBANCE TO THIS SOIL.

TEMPORARY SEEDING

A. THE FOLLOWING SURFACES OF THE SITE SHALL BE TEMPORARILY SEEDED AND MULCHED:
   1). THE SURFACE OF TOPSOIL STOCKPILES.
   2). THE SURFACE OF EXPOSED EARTH AREAS THAT WILL BE EXPOSED WITHOUT CONSTRUCTION ACTIVITY THEREON.
B. SEEDING SHALL OCCUR IMMEDIATELY AFTER ESTABLISHMENT OF THE TOPSOIL STOCKPILES OR ROUGH GRADED AREAS. THE FOLLOWING SHALL BE PLANTED:

   RYEGRASS – BLUE TAG CERTIFIED – 100% – 4 TO 5 LBS. PER 1,000 SQUARE FOOT
   ANNUAL TYPE – TYPICAL
   PERENNIAL TYPE – NOT APPLICABLE
C. PREPARE AREAS TO BE SEEDED AS FOLLOWS:
   1). REMOVE ALL DEBRIS, INCLUDING LARGE STONE. TILL SOIL TO A DEPTH OF FOUR INCHES TO SIX INCHES. APPLY LIME AT A RATE OF 100 LBS. PER 1,000 SQUARE FEET.
   2). BEFORE AUGUST, SEPTEMBER OR OCTOBER SEEDING APPLY 20-25 LBS. OF 5-10-10 FERTILIZER PER 1,000 SQUARE FOOT. BEFORE FEBRUARY, MARCH, APRIL, MAY, JUNE, JULY OR NOVEMBER SEEDING APPLY 40 POUNDS OF 10-5-5 FERTILIZER PER 1,000 SQUARE FEET. WORK INTO TOP INCH OF SOIL.
D. SOW SEED AT THE INDICATED RATE. DIVIDE SEED INTO TWO EQUAL LOTS. SOW ONE LOT IN ONE DIRECTION. SOW SECOND LOT AT RIGHT ANGLE TO FIRST. RAKE SEEDED AREA SLIGHTLY. ROLL SURFACE LIGHTLY TO FIRM SOIL AROUND SEED.
E. PLACE CLEAN DRY STRAW OR HAY MULCH WITHIN 48 HOURS AFTER SEEDING. PLACE AT THE RATE OF 1,200 LBS. PER 1,000 SQUARE YARD
F. HAY OR STRAW MULCH MUST BE APPLIED AT 3.0 TONS PER ACRE. STRAW MULCH SHALL BE APPLIED IN LONG STRANDS, NOT CHOPPED OR FINELY BROKEN.

TEMPORARY MULCHING

A. MULCH PROPOSED LANDSCAPE AREAS OR TOPSOIL STOCKPILES IF EARTHWORK IS COMPLETED OUTSIDE OF THE RECOMMENDED PLANTING SEASONS FOR TEMPORARY SEEDING OR DUE TO UNFAVORABLE WEATHER CONDITIONS.
B. MULCH SHALL BE APPLIED IMMEDIATELY FOLLOWING THE ESTABLISHMENT OF THE TOPSOIL STOCKPILE OR ROUGH GRADING.
C. MULCH WITH SUITABLE FIBROUS GROUND, SHREDDED AGED HARDWOOD, PINEWOOD BARK, STRAW, OR HAY UNIFORMLY AND CONTINUOUSLY TO A LOOSE DEPTH OF 3 INCHES MINIMUM. ANCHOR AS REQUIRED.
D. PROPERLY MAINTAIN MULCHED AREAS UNTIL PERMANENT STABILIZATION MEASURES ARE COMPLETE. REAPPLY MULCH MATERIALS WHICH BECOME DISLODGED AT INITIAL OR MODIFIED RATES AS NECESSARY. IF A SLOPE FAILURE OCCURS WHICH REQUIRES REDRESSING, EXCAVATION, OR THE ESTABLISHMENT OF A NEW SLOPE, REPLACE MULCH AS NECESSARY.

PERMANENT SEEDING

A. PERMANENT SEEDING SHALL OCCUR IMMEDIATELY AFTER THE FINAL GRADING IS COMPLETED. SEED WITH PERENNIAL RYEGRASS PER THE APPLICATION RATES BELOW.
B. REMOVE ALL DEBRIS, INCLUDING LARGE STONES. TILL SOIL TO A DEPTH OF FOUR INCHES TO SIX INCHES. APPLY LIME AT A RATE OF 4 TONS PER ACRE. BEFORE JUNE 15, APPLY 870-1090 LBS. OF 5-10-10 FERTILIZER PER ACRE. BEFORE OCTOBER 30, APPLY 1740 LBS. OF 10-5-5 FERTILIZER PER ACRE. WORK FERTILIZER INTO TOP INCH OF SOIL.
C. SEED ONLY AT THE FOLLOWING TIMES: MARCH 1 TO NOVEMBER 15.
D. APPLY SEED AT A RATE OF 160 LBS. PER ACRE. DIVIDE SEED INTO TWO EQUAL LOTS. SOW ONE LOT IN ONE DIRECTION. SOW SECOND LOT AT RIGHT ANGLE TO FIRST LOT. RAKE SEEDED AREA SLIGHTLY. ROLL SURFACE LIGHTLY TO FIRM SOIL AROUND SEED.
E. MULCH SEEDED AREAS WITH STRAW OR HAY AT THE RATE OF 3 TONS PER ACRE. ANCHOR MULCH. COMPLY WITH THE REQUIREMENTS OF SECTION 805 – MULCHING, PENNDOT PUBLICATION 408. ANCHOR MULCH AS SPECIFIED.
F. HAY OR STRAW MULCH MUST BE APPLIED AT 3.0 TONS PER ACRE. STRAW MULCH SHALL BE APPLIED IN LONG STRANDS, NOT CHOPPED OR FINELY BROKEN.

EMERGENCY SEEDING

DURING CONSTRUCTION, ALL DISTURBED AREAS SHOULD BE SEEDED ACCORDING TO THE FOLLOWING INSTRUCTIONS: SEEDING RECOMMENDATIONS FOR SIX (6) TO TWELVE (12) MONTH PERIODS:

A. INSTALL NEEDED WATER-CONTROL MEASURES.
B. PERFORM ALL CULTURAL OPERATIONS AT RIGHT ANGLES TO THE SLOPE.
C. LIME ACCORDING TO SOIL TEST, KNOWLEDGE OF SITE, OR APPLY TWO (2) TONS OF GROUND LIMESTONE, PER ACRE.
D. FERTILIZE ACCORDING TO SOIL TEST, KNOWLEDGE OF SITE, OR APPLY 40-40-40, PER ACRE.
E. INCORPORATE LIME AND FERTILIZER INTO THE TOP (4) INCHES OF SURFACE SOIL BY DISCING OR OTHER SUITABLE MEANS.
F. SEED ONE (1) OF THE FOLLOWING MIXTURES AT THE MOST SUITABLE DATE. APPLY UNIFORMLY WITH A DRILL OR BY BROADCASTING.
   1. MARCH 1 TO OCTOBER 1 – TWENTY (20) POUNDS OF ANNUAL RYE OR FIELD BROMEGRASS PER ACRE.
   2. MARCH 1 TO MAY 30 – TWENTY (20) POUNDS OF ANNUAL RYE GRASS OR FIELD BROMEGRASS AND SIXTY-FOUR (64) POUNDS OF SPRING OATS PER ACRE.
   3. AUGUST 1 TO NOVEMBER 1 – TWENTY (20) POUNDS OF ANNUAL RYE GRASS OR FIELD BROMEGRASS AND ONE HUNDRED TWELVE (112) POUNDS OF WINTER RYE PER ACRE.
G. HAY OR STRAW MULCH MUST BE APPLIED AT 3.0 TONS PER ACRE. STRAW MULCH SHALL BE APPLIED IN LONG STRANDS, NOT CHOPPED OR FINELY BROKEN.
H. COVER GRASS AND LEGUME SEEDS ONE-QUARTER (1/4) INCH DEEP WITH CULTIPACKER OR HARROW. COVER RYE OR OATS ABOUT TWO (2) INCHES DEEP.
I. MOW RYE OR OATS JUST BEFORE THEY HEAD OUT IF SLOPE PERMITS.

POTENTIAL FOR THERMAL IMPACTS

THERMAL IMPACTS WILL BE MITIGATED BECAUSE THE PROPOSED PROJECT WILL REDUCE THE AMOUNT OF IMPERVIOUS COVERAGE AT THE SITE BY ADDING LANDSCAPE ISLANDS TO THE EXISTING PARKING AREA. THE EXISTING PROPOSED PROJECT ADDS 0.069 ACRES OF LANDSCAPED ISLANDS. THE REDUCTION OF ASPHALT PAVING WILL REDUCE LOCALIZED HEAT-ISLAND EFFECTS. IN ADDITION, THE LANDSCAPED ISLANDS WILL CONTAIN TREES THAT WILL OFFER SHADE TO THE AREA AND HELP RETAIN SOME STORMWATER DURING RAINFALL EVENTS.

BUCKS COUNTY STANDARD E&S NOTES

1. STOCKPILE HEIGHTS MUST NOT EXCEED 35 FEET; STOCKPILE SLOPES MUST NOT EXCEED 2:1.
2. THE OPERATOR/RESPONSIBLE PERSON (O/RP) ON SITE SHALL ASSURE THAT THE APPROVED EROSION AND SEDIMENT CONTROL PLAN IS PROPERLY AND COMPLETELY IMPLEMENTED.
3. IMMEDIATELY UPON DISCOVERING UNFORSEEN CIRCUMSTANCES POSIN THE POTENTIAL FOR ACCELERATED EROSION AND/OR SEDIMENT POLLUTION, THE O/RP SHALL IMPLEMENT APPROPRAITE BEST MANAGEMENT PRACTICES TO ELIMINATE THE POTENTIAL FOR ACCELERATED EROSION AND/OR SEDIMENT POLLUTION.
4. THE O/RP SHALL ASSURE THAT AN EROSION AND SEDIMENT CONTROL PLAN HAS BEEN PREPARED, APPROVED BY THE BUCKS COUNTY CONSERVATION DISTRICT, AND IS BEING IMPLEMENTED AND MAINTAINED FOR ALL SOIL AND/OR ROCK SPOIL AND BORROW AREAS REGARDLESS OF THEIR LOCATION.
5. ALL PUMPING OF SEDIMENT-LADEN WATER SHALL BE THROUGH A SEDIMENT CONTROL BMP SUCH AS A PUMPED WATER FILTER BAG DISCHARGING OVER UNDISTURBED AREAS.
6. A COPY OF THE APPROVED EROSION AND SEDIMENT CONTROL PLAN MUST BE AVAILABLE ON THE PROJECT SITE AT ALL TIMES.
7. EROSION AND SEDIMENT BMPs MUST BE CONSTRUCTED, STABILIZED AND FUNCTIONAL BEFORE SITE DISTURBANCE BEGINS WITHIN THE TRIBUTARY AREAS OF THE BMPs.
8. AFTER FINAL SITE STABILIZATION HAS BEEN ACHIEVED, TEMPORARY EROSION AND SEDIMENT BMP CONTROLS MUST BE REMOVED. AREAS DISTURBED DURING THE REMOVAL OF THE BMPs MUST BE STABILIZED IMMEDIATELY.
9. AT LEAST SEVEN DAYS BEFORE STARTING ANY EARTH DISTURBANCE ACTIVITY, THE O/RP SHALL INVITE ALL CONTRACTORS INVOLVED IN THAT ACTIVITY, THE LANDOWNER, ALL APPROPRIATE MUNICIPAL OFFICIALS, THE EROSION AND SEDIMENT CONTROL PLAN PREPARER AND THE BUCKS COUNTY CONSERVATION DISTRICT TO A PRE-CONSTRUCTION MEETING. ALSO, AT LEAST THREE DAYS BEFORE STARTING ANY EARTH DISTURBANCE ACTIVITY, ALL CONTRACTORS INVOLVED IN THAT ACTIVITY SHALL NOTIFY THE PENNSYVANIA ONE-CALL SYSTEEM INC: 1800-242-1776 TO DETERMINE ANY UNDERGROUND UTILITIES LOCATIONS.
10. IMMEDIATELY AFTER EARTH DISTURBANCE ACTIVITY CEASES, THE O/RP SHALL STABILIZE ANY AREAS DISTURBED BT THE ACTIVITY. DURING NON-GERMINATING PERIODS, MULCH MUST BE APPLIED AT SPECIFIED RATES. DISTURBED AREAS THAT ARE NOT AT FINISHED GRADE AND WHICH WILL BE RE-DISTURBED WITHIN ONE YEAR MUST BE STABILIZED IN ACCORDANCE WITH TEMPORARY VEGETATIVE STABILIZATION SPECIFICATIONS. DISTURBED AREAS THAT ARE AT FINISHED GRADE OR WHICH WILL NOT BE RE-DISTURBED WITHIN ONE YEAR MUST BE STABILIZED IN ACCORDANCE WITH PERMANENT VEGETATIVE STABILIZATION SPECIFICATIONS.
11. AN AREA SHALL BE CONSIDERED TO HAVE ACHIEVED FINAL STABILZATION WHEN IT HAS A MINIMUM UNIFORM 70 PERCENT VEGETATIVE OR OTHER PERMANENT NON-VEGETATIVE COVER WITH A DENSITY SUFFICIENT TO RESIST ACCELERATED SURFACE EROSION AND SUBSURFACE CHARACTERISTICS SUFFICIENT TO RESIST SLIDING AND OTHER MOVEMENTS.
12. UPON THE INSTALLATION OF TEMPORARY SEDIMENT BASIN RISER(S), AN IMMEDIATE INSPECTION OF THE RISER(S) SHALL BE CONDUCTED BY A QUALIFIED SITE REPRESENTATIVE, WHEREUPON THE BUCKS COUNTY CONSERVATION DISTRICT SHALL BE NOTIFIED IN WRITING THAT THE RISER IS SEALED (WATER-TIGHT).
13. A STREAM CROSSING, A 50-FOOT BUFFER SHALL BE MAINTAINED. ON BUFFERS, CLEARINGS, SOD DISTURBANCES AND EXCAVATIONS, EQUIPMENT TRAFFIC SHOULD BE MINIMIZED. ACTIVITIES SUCH AS STACKING LOGS, BURNING CLEARED BRUSH, DISCHARFING RAINWATER FROM TRENCHES, WELDING PIPE SECTIONS, REFUELING AND MAINTAINING EQUIPMENT SHOULD BE AVOIDED WITHIN BUFFER ZONES.
14. UNTIL A SITE IS STABILIZED, ALL EROSION AND SEDIMENT BMPs MUST BE MAINTAINED PROPERLY. MAINTENANCE MUST INCLUDE INSPECTIONS OF ALL EROSION CONTROL BMPs AFTER EACH RUNOFF EVENT AND ON A WEEKLY BASIS. ALL PREVENTATIVE AND REMEDIAL MAINTENANCE WORK, INCLUDING CLEANOUT, REPAIR, REPLACEMENT, RE-GRADING, RE-SEEDING, RE-MULCHING AND RE-NETTING MUST BE PERFORMED IMMEDIATELY. IF EROSION AND SEDIMENT CONTROL BMPs FAIL TO PERFORM AS EXPECTED, REPLACEMENT BMPs, OR MODIFICATIONS OF THOSE INSTALLED, WILL BE REQUIRED.
15. SEDIMENT REMOVED FROM BMPs SHALL BE DISPOSED OF ON-SITE IN LANDSCAPED AREAS OUTSIDE OF STEEP SLOPES, WETLANDS, FLOODPLAINS OR DRAINAGE SWALES AND IMMEDIATELY STABILIZED OR PLACED IN SOIL STOCKPILES AND STABILIZED.
16. ALL BUILDING MATERIALS AND WASTES MUST BE REMOVED FROM THE SITE AND RECYCLED OR RECYCLED IN ACCORDANCE WITH DEP's SOLID WASTE REGULATIONS (25 PA CODE 260.1 ET SEQ., 271,1 ET SEQ., AND 287.1 ET SEQ., AND/OR ANY ADDITIONAL LOCAL, STATE OR FEDERAL REGULATIONS. NO BUILDING MATERIALS (USED OR UNUSED) OR WASTE MATERIALS SHALL BE BURNED, BURIED, DUMPED OR DISCHARGED AT THE SITE.

NOTES

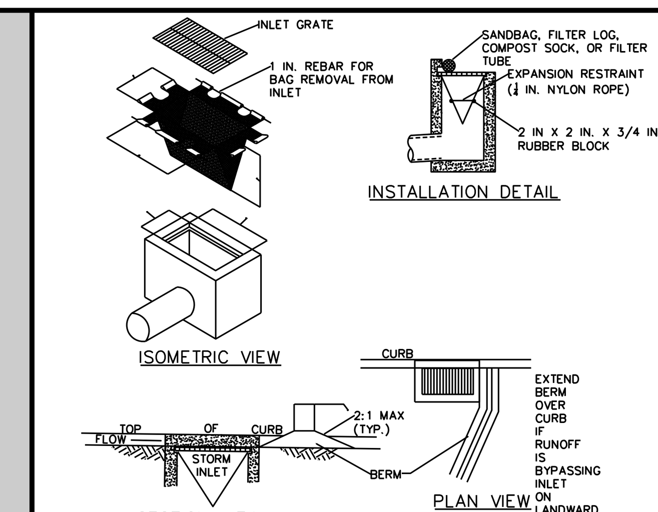

NOTES:

MAXIMUM DRAINAGE AREA = 1/2 ACRE.

INLET PROTECTION SHALL NOT BE REQUIRED FOR INLET TRIBUTARY TO SEDIMENT BASIN OR TRAP. BERMS SHALL BE REQUIRED FOR ALL INSTALLATIONS.

ROLLED EARTHEN BERM SHALL BE MAINTAINED UNTIL ROADWAY IS STONED. ROAD SUBBASE BERM SHALL BE MAINTAINED UNTIL ROADWAY IS PAVED. SIX INCH MINIMUM HEIGHT ASPHALT BERM SHALL BE MAINTAINED UNTIL ROADWAY SURFACE RECEIVES FINAL COAT.
AT A MINIMUM, THE FABRIC SHALL HAVE A MINIMUM GRAB TENSILE STRENGTH OF 120 LBS, A MINIMUM BURST STRENGTH OF 200 PSI, AND A MINIMUM TRAPEZOIDAL TEAR STRENGTH OF 50 LBS. FILTER BAGS SHALL BE CAPABLE OF TRAPPING ALL PARTICLES NOT PASSING A NO. 40 SIEVE.

INLET FILTER BAGS SHALL BE INSPECTED ON A WEEKLY BASIS AND AFTER EACH RUNOFF EVENT. BAGS SHALL BE EMPTIED AND RINSED OR REPLACED WHEN HALF FULL OR WHEN FLOW CAPACITY HAS BEEN REDUCED SO AS TO CAUSE FLOODING OR BYPASSING OF THE INLET. DAMAGED OR CLOGGED BAGS SHALL BE REPLACED. A SUPPLY SHALL BE MAINTAINED ON SITE FOR REPLACEMENT OF BAGS. ALL NEEDED REPAIRS SHALL BE INITIATED IMMEDIATELY AFTER THE INSPECTION. DISPOSE OF ACCUMULATED SEDIMENT AS WELL AS ALL USED BAGS ACCORDING TO THE PLAN NOTES.

DO NOT USE ON MAJOR PAVED ROADWAYS WHERE PONDING MAY CAUSE TRAFFIC HAZARDS.

FILTER BAG INLET PROTECTION - TYPE C INLET

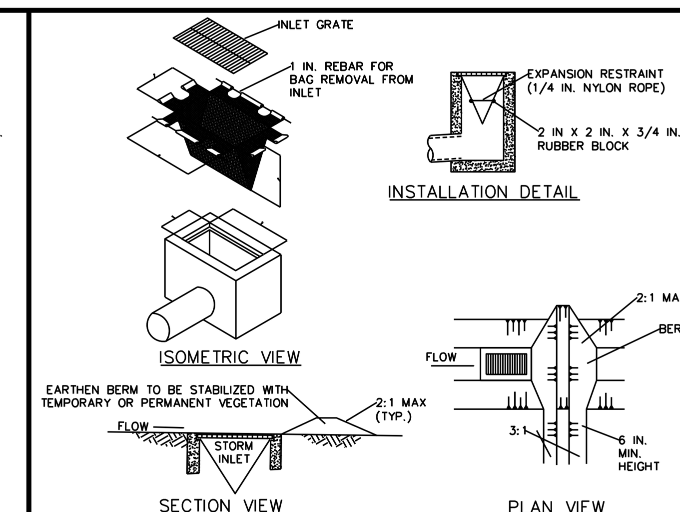

NOTES:

MAXIMUM DRAINAGE AREA = 1/2 ACRE.

INLET PROTECTION SHALL NOT BE REQUIRED FOR INLET TRIBUTARY TO SEDIMENT BASIN OR TRAP. BERMS SHALL BE REQUIRED FOR ALL INSTALLATIONS.

ROLLED EARTHEN BERM IN ROADWAY SHALL BE MAINTAINED UNTIL ROADWAY IS STONED. ROAD SUBBASE BERM ON ROADWAY SHALL BE MAINTAINED UNTIL ROADWAY IS PAVED. EARTHEN BERM IN CHANNEL SHALL BE MAINTAINED UNTIL PERMANENT STABILIZATION IS COMPLETED OR REMAIN PERMANENTLY.

AT A MINIMUM, THE FABRIC SHALL HAVE A MINIMUM GRAB TENSILE STRENGTH OF 120 LBS., A MINIMUM BURST STRENGTH OF 200 PSI, AND A MINIMUM TRAPEZOIDAL TEAR STRENGTH OF 50 LBS. FILTER BAGS SHALL BE CAPABLE OF TRAPPING ALL PARTICLES NOT PASSING A NO. 40 SIEVE.

INLET FILTER BAGS SHALL BE INSPECTED ON A WEEKLY BASIS AND AFTER EACH RUNOFF EVENT. BAGS SHALL BE EMPTIED AND RINSED OR REPLACED WHEN HALF FULL OR WHEN FLOW CAPACITY HAS BEEN REDUCED SO AS TO CAUSE FLOODING OR BYPASSING OF THE INLET. DAMAGED OR CLOGGED BAGS SHALL BE REPLACED. A SUPPLY SHALL BE MAINTAINED ON SITE FOR REPLACEMENT OF BAGS. ALL NEEDED REPAIRS SHALL BE INITIATED IMMEDIATELY AFTER THE INSPECTION. DISPOSE ACCUMULATED SEDIMENT AS WELL AS ALL USED BAGS ACCORDING TO THE PLAN NOTES.

DO NOT USE ON MAJOR PAVED ROADWAYS WHERE PONDING MAY CAUSE TRAFFIC HAZARDS.

FILTER BAG INLET PROTECTION - TYPE M INLET

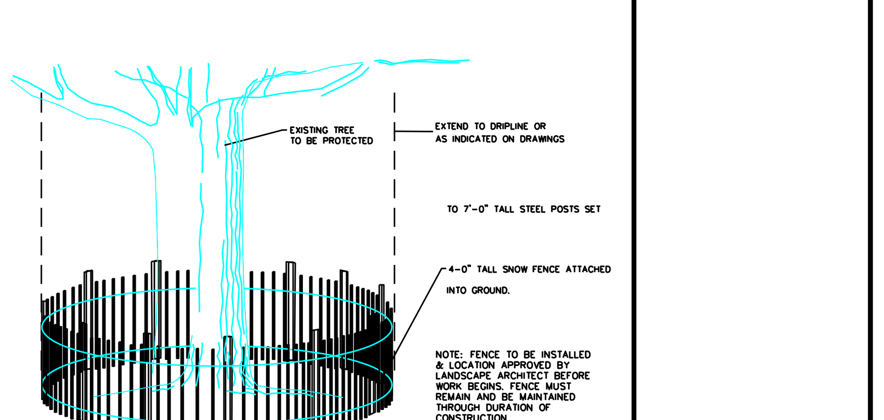

TREE PROTECTION FENCE

STANDARD CONSTRUCTION DETAIL # 3-1
Rock Construction Entrance

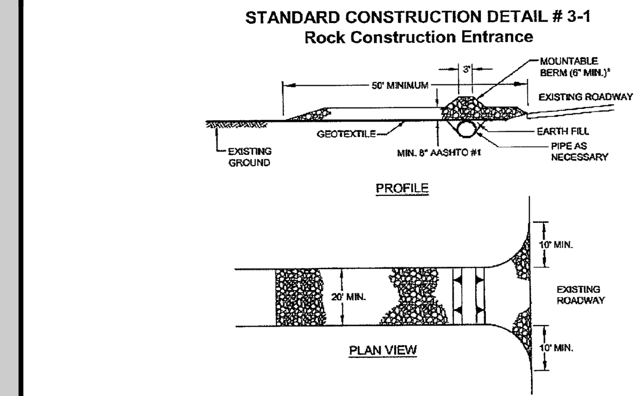

Modified from Maryland DOE

Remove topsoil prior to installation of rock construction entrance. Extend rock over full width of entrance.

Runoff shall be diverted from roadway to a suitable sediment removal BMP prior to entering rock construction entrance.

Mountable berm shall be installed wherever optional culvert pipe is used and proper pipe cover as specified by manufacturer is not otherwise provided. Pipe shall be sized appropriately for size of ditch being crossed.

MAINTENANCE: Rock construction entrance thickness shall be constantly maintained to the specified dimensions by adding rock. A stockpile shall be maintained on site for this purpose. All sediment deposited on paved roadways shall be removed and returned to the construction site immediately. If excessive amounts of sediment are being deposited on roadway, extend length of rock construction entrance by 50 foot increments until condition is alleviated or install wash rack. Washing the roadway or sweeping the deposits into roadway ditches, sewers, culverts, or other drainage courses is not acceptable.

ROCK CONSTRUCTION ENTRANCE

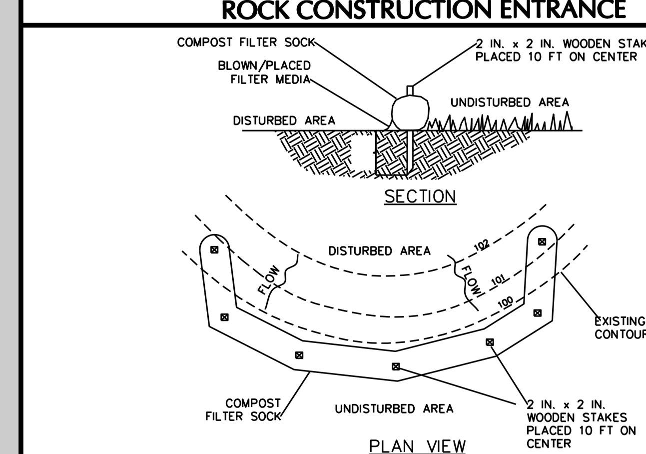

NOTES:

SOCK FABRIC SHALL MEET STANDARDS OF TABLE 4.1 OF THE PA DEP EROSION CONTROL MANUAL. COMPOST SHALL MEET THE STANDARDS OF TABLE 4.2 OF THE PA DEP EROSION CONTROL MANUAL.

COMPOST FILTER SOCK SHALL BE PLACED AT EXISTING LEVEL GRADE. BOTH ENDS OF THE BARRIER SHALL BE EXTENDED AT LEAST 8 FEET UP SLOPE AT 45 DEGREES TO THE MAIN BARRIER ALIGNMENT. MAXIMUM SLOPE LENGTH ABOVE ANY BARRIER SHALL NOT EXCEED THAT SPECIFIED FOR THE SIZE OF THE SOCK AND THE SLOPE OF ITS TRIBUTARY AREA.

TRAFFIC SHALL NOT BE PERMITTED TO CROSS COMPOST FILTER SOCKS.

ACCUMULATED SEDIMENT SHALL BE REMOVED WHEN IT REACHES 1/2 THE ABOVE GROUND HEIGHT OF THE BARRIER AND DISPOSED IN THE MANNER DESCRIBED ELSEWHERE IN THE PLAN.

COMPOST FILTER SOCKS SHALL BE INSPECTED WEEKLY AND AFTER EACH RUNOFF EVENT. DAMAGED SOCKS SHALL BE REPAIRED ACCORDING TO MANUFACTURER'S SPECIFICATIONS OR REPLACED WITHIN 24 HOURS OF INSPECTION.

BIODEGRADABLE COMPOST FILTER SOCKS SHALL BE REPLACED AFTER 6 MONTHS; PHOTODEGRADABLE SOCKS AFTER 1 YEAR. POLYPROPYLENE SOCKS SHALL BE REPLACED ACCORDING TO MANUFACTURER'S RECOMMENDATIONS.

UPON STABILIZATION OF THE AREA TRIBUTARY TO THE SOCK, STAKES SHALL BE REMOVED. THE SOCK MAY BE LEFT IN PLACE AND VEGETATED OR REMOVED. IN THE LATTER CASE, THE MESH SHALL BE CUT OPEN AND THE MULCH SPREAD AS A SOIL SUPPLEMENT.

IN THE EVENT STAKING IS NOT POSSIBLE, I.E., WHEN SEDIMENT CONTROL IS USED ON PAVEMENT, HEAVY CONCRETE BLOCKS SHALL BE USED BEHIND THE SEDIMENT CONTROL TO HELP STABILIZE DURING RAINFALL/RUNOFF EVENTS.

TABLE 4.1
Compost Sock Fabric Minimum Specifications

Material Type	3 mil HDPE	5 mil HDPE	5 mil HDPE	Multi-Filament Polypropylene (MFPP)	Heavy Duty Multi-Filament Polypropylene (HDMFPP)
Material Characteristics	Photo-degradable	Photo-degradable	Bio-degradable	Photo-degradable	Photo-degradable
Sock Diameters	12" 18"	12" 18" 24" 32"	12" 18" 24" 32"	12" 18" 24" 32"	12" 18" 24" 32"
Mesh Opening	3/8"	3/8"	3/8"	3/8"	1/8"
Tensile Strength		26 psi	26 psi	44 psi	202 psi
Ultraviolet Stability % Original Strength (ASTM G-155)	23% at 1000 hr.	23% at 1000 hr.		100% at 1000 hr.	100% at 1000 hr.
Minimum Functional Longevity	6 months	9 months	6 months	1 year	2 years
Two-ply systems					
Inner Containment Netting			HDPE biaxial net Continuously wound Fusion-welded junctures 3/4" X 3/4" Max. aperture size		
Outer Filtration Mesh			Composite Polypropylene Fabric (Woven layer and non-woven fleece mechanically fused via needle punch) 3/16" Max. aperture size		
Sock fabrics composed of burlap may be used on projects lasting 6 months or less.					

TABLE 4.2
Compost Standards

Organic Matter Content	80% - 100% (dry weight basis)
Organic Portion	Fibrous and elongated
pH	5.5 - 8.0
Moisture Content	35% - 55%
Particle Size	98% pass through 1" screen
Soluble Salt Concentration	5.0 dS/m (mmhos/cm) Maximum

COMPOST FILTER SOCK

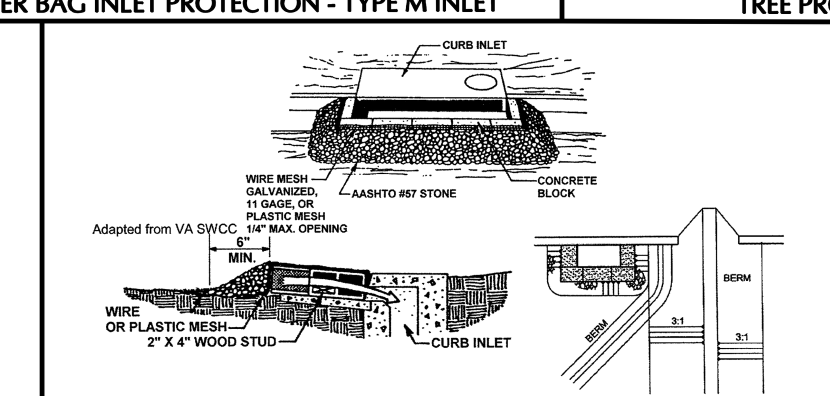

Maximum drainage area = 1 acre.

Inlet protection shall not be required for inlet tributary to sediment basin or trap. Berms shall be required for all installations.

Rolled earthen berm shall be provided and maintained immediately down gradient of the protected inlet until roadway is stoned. Road subbase berm shall be maintained until roadway is paved. Six inch minimum height asphalt berm shall be maintained until roadway surface receives final coat.

Sediment shall be removed when it reaches half the height of the stone. Damaged or clogged installations shall be repaired or replaced immediately.

For systems discharging to HQ or EV surface water, a 6 inch thick compost layer shall be securely anchored on outside and over top of stone.

DO NOT USE ON MAJOR PAVED ROADWAYS WHERE PONDING MAY CAUSE TRAFFIC HAZARDS.

STONE AND CONCRETE BLOCK INLET PROTECTION DETAIL - TYPE C INLET

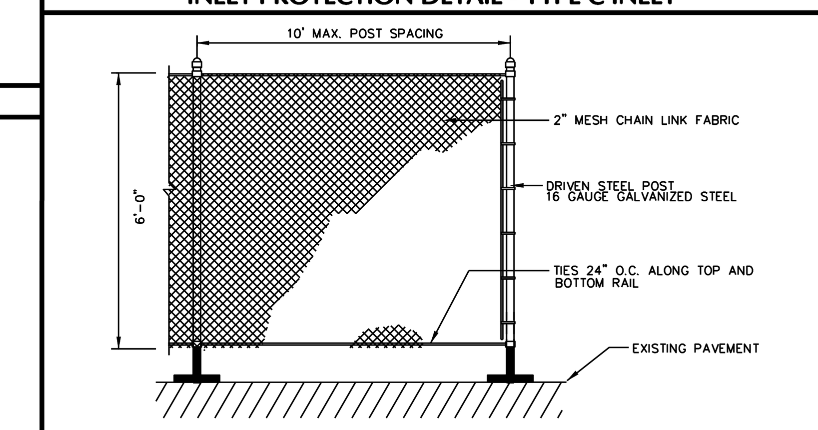

TEMPORARY CONSTRUCTION FENCE

STANDARD CONSTRUCTION DETAIL # 3-16
Pumped Water Filter Bag

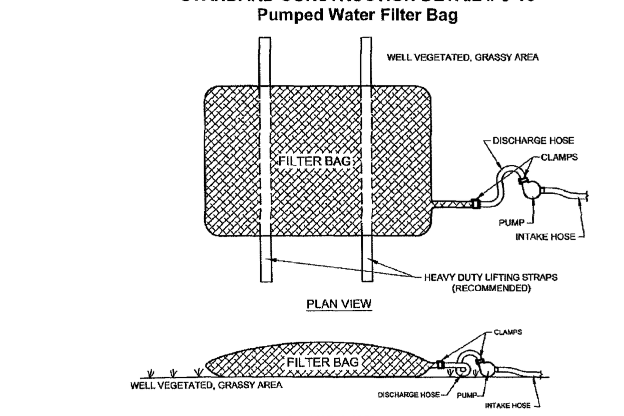

PA DEP

Low volume filter bags shall be made from non-woven geotextile material sewn with high strength, double stitched "J" type seams. They shall be capable of trapping particles larger than 150 microns. High volume filter bags shall be made from woven geotextiles that meet the following standards:

Property	Test Method	Minimum Standard
Avg. Wide Width Strength	ASTM D-4884	60 lb/in
Grab Tensile	ASTM D-4632	205 lb
Puncture	ASTM D-4833	110 lb
Mullen Burst	ASTM D-3786	350 psi
UV Resistance	ASTM D-4355	70%
AOS % Retained	ASTM D-4751	80 Sieve

A suitable means of accessing the bag with machinery required for disposal purposes shall be provided. Filter bags shall be replaced when they become ½ full of sediment. Spare bags shall be kept available for replacement of those that have failed or are filled. Bags shall be placed on straps to facilitate removal unless bags come with lifting straps already attached.

Bags shall be located in well-vegetated (grassy) area, and discharge onto stable, erosion resistant areas. Where this is not possible, a geotextile underlayment and flow path shall be provided. Bags may be placed on filter stone to increase discharge capacity. Bags shall not be placed on slopes greater than 5%. For slopes exceeding 5%, clean rock or other non-erodible and non-polluting material may be placed under the bag to reduce slope steepness.

No downslope sediment barrier is required for most installations. Compost berm or compost filter sock shall be installed below bags located in HQ or EV watersheds, within 50 feet of any receiving surface water or where grassy area is not available.

The pump discharge hose shall be inserted into the bags in the manner specified by the manufacturer and securely clamped. A piece of PVC pipe is recommended for this purpose.

The pumping rate shall be no greater than 750 gpm or ½ the maximum specified by the manufacturer, whichever is less. Pump intakes shall be floating and screened.

Filter bags shall be inspected daily. If any problem is detected, pumping shall cease immediately and not resume until the problem is corrected.

SEDIMENT FILTER BAG FOR PUMPED WATER

DETAILS

LANGAN

Date	Description	No.
8/8/2016	REVISIONS PER TOWNSHIP AND COUNTY COMMENTS	1.

REVISIONS

BRIAN M. CONLON DATE
PROFESSIONAL ENGINEER
PA Lic. No. PE061782

LANGAN
30 South 17th Street, Suite 1300, Philadelphia, PA 19103
T: 215.864.0640 F: 215.864.0671 www.langan.com
NEW JERSEY NEW YORK CONNECTICUT PENNSYLVANIA OHIO
VIRGINIA WASHINGTON DC FLORIDA NORTH DAKOTA CALIFORNIA
ABU DHABI ATHENS DOHA DUBAI ISTANBUL
Langan Engineering, Environmental, Surveying and Landscape Architecture, D.P.C.
Langan Engineering and Environmental Services, Inc.
Langan CT, Inc.
Langan International LLC
Collectively known as Langan

Project
HOME DEPOT PLAZA EXPANSION

BENSALEM TOWNSHIP
BUCKS COUNTY PENNSYLVANIA

Drawing Title
SOIL EROSION & SEDIMENT CONTROL NOTES AND DETAILS

Project No. 220071601
Date 24 JUNE 2016
Scale 1"=30'
Drawn By TFH
Submission Date BMC
Drawing No. CE-501
SHEET 24 OF 29

© 2014 Langan

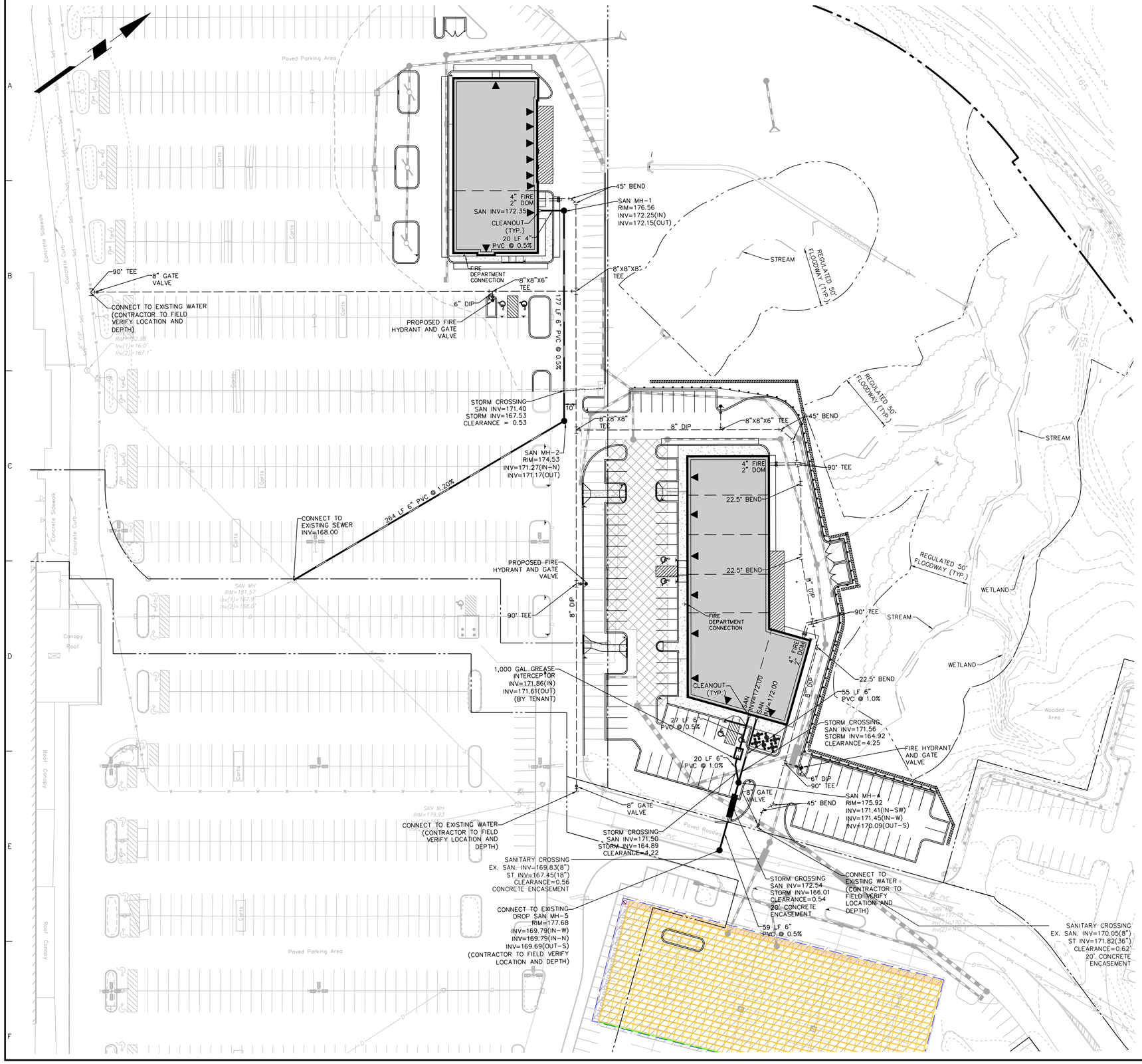

GENERAL SITE NOTES

1. THE CONTRACTOR SHALL FURNISH, INSTALL, TEST AND COMPLETE ALL WORK TO THE SATISFACTION OF THE ENGINEER AND OWNER IN ACCORDANCE WITH THE CONTRACT DOCUMENTS. THE CONTRACTOR IS SOLELY RESPONSIBLE FOR MEANS AND METHODS OF CONSTRUCTION; AS SUCH, THESE PLANS DO NOT COMPLETELY REPRESENT, NOR ARE THEY INTENDED TO REPRESENT, ALL SPECIFIC INSTRUCTIONS REQUIRED FOR SITEWORK CONSTRUCTION. THE CONTRACTOR IS RESPONSIBLE TO CONSTRUCT ALL IMPROVEMENTS DEPICTED ON THESE PLANS IN ACCORDANCE WITH ALL APPLICABLE RULES, REGULATIONS AND LAWS IN EFFECT AT THE TIME OF CONSTRUCTION.
2. THE CONTRACTOR SHALL ACCEPT THE SITE AS IS. THE CONTRACTOR SHALL ASSESS CONDITIONS, AND THE KIND, QUALITY AND QUANTITY OF WORK REQUIRED. THE OWNER AND ENGINEER MAKE NO GUARANTEE IN REGARD TO THE ACCURACY OF ANY INFORMATION THAT WAS OBTAINED DURING INVESTIGATIONS. THE CONTRACTOR SHALL MAKE A THOROUGH SITE INSPECTION IN ORDER TO FIELD CHECK EXISTING SITE CONDITIONS; CORRELATE CONDITIONS WITH THE DRAWINGS; AND, RESOLVE ANY POSSIBLE CONSTRUCTION CONFLICTS WITH THE OWNER AND ENGINEER PRIOR TO COMMENCEMENT OF WORK. THE CONTRACTOR SHALL PERFORM ADDITIONAL TOPOGRAPHIC SURVEYS HE/SHE DEEMS NECESSARY, PROVIDED THEY ARE COORDINATED WITH THE OWNER. ANY CONDITIONS DETERMINED BY THE CONTRACTOR THAT DIFFER FROM THE INFORMATION SHOWN ON THE DRAWINGS THAT ARE NOT BROUGHT TO THE ATTENTION OF THE OWNER AND ENGINEER PRIOR TO THE START OF WORK SHALL NOT BE CONSIDERED GROUNDS FOR ADDITIONAL PAYMENT OR CHANGES TO THE CONTRACT DURATION, OR ANY OTHER CLAIMS AGAINST THE OWNER OR OWNER'S ENGINEER.
3. THE CONTRACTOR SHALL, WHEN HE/SHE DEEMS NECESSARY, PROVIDE A WRITTEN REQUEST FOR INFORMATION (RFI) TO THE OWNER AND/OR OWNER'S DESIGNATED REPRESENTATIVE, AND ENGINEER PRIOR TO THE CONSTRUCTION OF ANY SPECIFIC SITEWORK ITEM. THE (RFI) SHALL BE IN A FORM ACCEPTABLE TO OWNER AND/OR OWNER'S DESIGNATED REPRESENTATIVE, AND ENGINEER AND SHALL ALLOW FOR A MINIMUM OF THREE WORK DAYS FOR A WRITTEN REPLY. RFIS SHALL BE NUMBERED CONSECUTIVELY BY DATE SUBMITTED. THE CONTRACTOR SHALL BE SOLELY RESPONSIBLE FOR SITEWORK ITEMS CONSTRUCTED DIFFERENTLY THAN INTENDED OR AS DEPICTED ON THE PLANS.
4. INFORMATION RELATED TO ELEVATIONS AND PROPOSED UTILITIES (SUCH AS ROADWAY GRADES, INVERT ELEVATIONS, RIM ELEVATIONS, GRATE ELEVATIONS, BUILDING FINISHED FLOOR ELEVATIONS, ETC.) MAY BE SHOWN ON MORE THAN ONE PLAN SHEET. THE CONTRACTOR SHALL BE RESPONSIBLE FOR REVIEWING SUFFICIENTLY REVIEW ALL PLANS, PROFILES, DETAILS AND ANY OTHER INFORMATION IN THE CONTRACT DOCUMENTS FOR CONSISTENCY PRIOR TO BID. ANY INCONSISTENCIES OR DISCREPANCIES THAT ARE FOUND BY THE CONTRACTOR OR HIS ASSIGNS SHALL BE IMMEDIATELY BROUGHT TO THE ATTENTION OF THE OWNER AND ENGINEER IN WRITING, IN THE FORMAT OF AN RFI PRIOR TO BID.
5. THERE ARE ADDITIONAL NOTES, SPECIFICATIONS AND REQUIREMENTS CONTAINED THROUGHOUT THE PLAN SET AS WELL AS REFERENCES TO SPECIFICATIONS FROM APPLICABLE GOVERNING AUTHORITIES AND INDUSTRY STANDARDS. IT IS THE CONTRACTOR'S RESPONSIBILITY TO OBTAIN, REVIEW AND ADHERE TO ALL THESE DOCUMENTS.
6. CONTRACTOR IS SPECIFICALLY CAUTIONED THAT ALL CONSTRUCTION STAKEOUT FOR THIS PROJECT MUST BE COMPLETED FROM THE SITE SPECIFIC SURVEY CONTROL (HORIZONTAL AND VERTICAL) UPON WHICH THE DESIGN IS BASED. THE CONTRACTOR SHOULD NOT RELY ON OR RE-ESTABLISH SURVEY CONTROL BY GPS OR OTHER METHODS FOR USE IN CONSTRUCTION STAKEOUT OR ANY OTHER PURPOSE FOR THIS PROJECT. ANY DISCREPANCIES BETWEEN THE EXISTING HORIZONTAL OR VERTICAL DATA SHOWN ON THESE DRAWINGS AND THAT ENCOUNTERED IN THE FIELD MUST BE REPORTED TO THE DESIGN TEAM PRIOR TO CONSTRUCTION FOR RESOLUTION.

UTILITY NOTES:

1. ALL WORK MUST BE INSTALLED IN ACCORDANCE WITH BENSALEM TOWNSHIP, AND THE BUCKS COUNTY WATER AND SEWER AUTHORITY.
2. THE CONTRACTOR IS SPECIFICALLY CAUTIONED THAT THE LOCATION AND/OR ELEVATION OF EXISTING UTILITIES AS SHOWN ON THESE PLANS IS BASED ON RECORDS OF THE VARIOUS UTILITY COMPANIES AND, WHERE POSSIBLE, MEASUREMENTS TAKEN IN THE FIELD. THE INFORMATION IS NOT TO BE RELIED ON AS BEING EXACT OR COMPLETE. THE CONTRACTOR MUST CALL THE APPROPRIATE UTILITY COMPANY AT LEAST 72 HOURS BEFORE ANY EXCAVATION TO REQUEST EXACT FIELD LOCATION OF UTILITIES. IT SHALL BE THE RESPONSIBILITY OF THE CONTRACTOR TO RELOCATE ALL EXISTING UTILITIES WHICH CONFLICT WITH THE PROPOSED IMPROVEMENTS SHOWN ON THE PLANS. THE CONTRACTOR SHALL VERIFY ALL EXISTING CONDITIONS, UTILITY LOCATIONS, DEPTHS AND INVERTS PRIOR TO CONSTRUCTION. ANY CONDITIONS FOUND TO DIFFER FROM THOSE SHOWN BY THESE DRAWINGS SHALL BE IMMEDIATELY BROUGHT TO THE ATTENTION OF THE ENGINEER.
3. THE CONTRACTOR SHALL REFER TO ARCHITECTURAL PLANS AND SPECIFICATIONS FOR ACTUAL LOCATIONS OF ALL UTILITIES ENTERING THE BUILDING, INCLUDING SANITARY SEWER LATERALS, DOMESTIC WATER SERVICE AND FIRE PROTECTION, ELECTRIC, TELEPHONE AND GAS SERVICE. CONTRACTOR SHALL COORDINATE INSTALLATION OF UTILITIES IN SUCH A MANNER AS TO AVOID CONFLICTS AND TO ENSURE PROPER DEPTHS ARE ACHIEVED AS WELL AS COORDINATING WITH THE UTILITY COMPANIES AS TO LOCATION AND SCHEDULING OF CONNECTIONS TO THEIR FACILITIES.
4. THE STORM DRAINAGE SYSTEM IS SHOWN FOR INFORMATIONAL PURPOSES ONLY. REFER TO DRAWING CG-101 FOR COMPLETE GRADING AND DRAINAGE LAYOUT.
5. IT IS IMPERATIVE THAT UTILITY COMPANIES ARE NOTIFIED PRIOR TO ANY EXCAVATION AND/OR CONSTRUCTION. CALL 1-800-242-1776 TO ORDER MARK-OUTS.
6. THE ROUTING OF ALL UTILITIES IS SUBJECT TO ADJUSTMENT TO MEET UTILITY COMPANY REQUIREMENTS AND SPECIFICS OF BUILDING MECHANICAL DESIGN. WHEN BUILDING MECHANICAL DRAWINGS ARE COMPLETE AND UTILITY REQUIREMENTS ARE FINALIZED, NECESSARY ADJUSTMENTS SHALL BE MADE AS PART OF THE PREPARATION OF CONSTRUCTION DOCUMENTS.
7. THE CONTRACTOR SHALL ADJUST ALL EXISTING AND PROPOSED UTILITY FRAMES, COVERS, MANHOLES, VALVE BOXES, ETC. TO BE FLUSH WITH THE PROPOSED SURFACE ELEVATIONS.
8. ALL ELECTRIC, TELEPHONE, TELEVISION AND OTHER COMMUNICATION FACILITIES, BOTH MAIN AND SERVICE LINES SHALL BE PROVIDED BY UNDERGROUND WIRING WITHIN EASEMENTS OR DEDICATED PUBLIC RIGHTS-OF WAY.
9. ALL UTILITIES SHOULD BE KEPT TEN (10') APART (PARALLEL) OR WHEN CROSSING 18" VERTICAL CLEARANCE (OUTSIDE EDGE OF PIPE TO OUTSIDE EDGE OF PIPE).
10. CONTRACTOR SHALL MAINTAIN A MINIMUM OF 4'-0" COVER ON ALL WATERLINES.
11. EXISTING UTILITIES SHALL BE VERIFIED IN FIELD PRIOR TO INSTALLATION OF ANY NEW LINES.
12. REFER TO INTERIOR PLUMBING DRAWINGS FOR TIE-IN OF ALL UTILITIES.
13. CONTRACTOR IS RESPONSIBLE FOR COMPLYING TO THE SPECIFICATIONS OF THE LOCAL AUTHORITIES WITH REGARDS TO MATERIALS AND INSTALLATION OF THE WATER AND SEWER LINES.
14. ALL NECESSARY INSPECTIONS AND/OR CERTIFICATIONS REQUIRED BY CODES AND/OR UTILITY SERVICE COMPANIES SHALL BE PERFORMED PRIOR TO ANNOUNCED BUILDING POSSESSION AND THE FINAL CONNECTION OF SERVICE.
15. CONTRACTOR SHALL COORDINATE WITH ALL UTILITY COMPANIES FOR INSTALLATION REQUIREMENTS AND SPECIFICATIONS.
16. REFER TO BUILDING PLANS FOR SITE LIGHTING ELECTRICAL PLAN.
17. SEWER LINES SHOULD BE INSTALLED AT LEAST 18" BELOW WATER LINES WHERE THEY CROSS.

TELEPHONE, GAS, AND ELECTRIC LINES ARE SHOWN GRAPHICALLY TO REPRESENT THESE UTILITIES. ACTUAL DESIGN, SIZE AND LOCATION FOR THESE UTILITIES TO BE PROVIDED BY MEP DESIGNER AND/OR UTILITY COMPANY

NOTE TO THE CONTRACTOR:
THE CONTRACTOR IS RESPONSIBLE TO VERIFY THE LOCATIONS OF ALL EXISTING UTILITIES. ONLY THE LOCATION OF VISIBLE UTILITIES ON OR ABOVE THE SURFACE OF THE EARTH THAT CAN BE REASONABLY LOCATED USING STANDARD SURVEY PROCEDURES HAVE BEEN PLOTTED. NO CERTIFICATION IS MADE BY LANGAN AS TO THE ACCURACY OR COMPLETENESS OF THE ACTUAL LOCATION OF ANY UNDERGROUND UTILITIES OR STRUCTURES. IT IS IMPERATIVE THAT PRIOR TO ANY CONSTRUCTION IN THE AREA, A UTILITY MARK-OUT IS ORDERED, CALL 1 (800) 242-1776

IN AREAS OF EXCAVATION, ALL EXISTING UTILITIES TO REMAIN SHALL BE CHECKED FOR PROPER COVER AS REQUIRED BY THE UTILITY OWNER. SHOULD MINIMUM COVER NOT EXIST, THE CONTRACTOR SHALL BE RESPONSIBLE TO COORDINATE WITH SAID UTILITY COMPANY TO LOWER THE UTILITY TO PROVIDE PROPER COVER.

REFER TO DETAIL SHEETS CU-501 FOR SANITARY SEWER AND WATER DETAILS

ALL UTILITIES ARE UNDERGROUND UNLESS NOTED OTHERWISE.

ACT 287 AS AMENDED

IT IS THE CONTRACTOR'S RESPONSIBILITY TO COMPLY WITH THE PENNSYLVANIA ACT 181 OF 2006 AND TO CONTACT THE "ONE CALL SYSTEM" THREE (3) WORKING DAYS (UNLESS OTHERWISE NOTED) PRIOR TO START OF CONSTRUCTION.

PENNSYLVANIA ONE CALL 1-800-242-1776
SERIAL NO. 20101102688

AQUA PENNSYLVANIA INC.
762 W LANCASTER AVE
BRYN MAWR, PA 19010
(610) 562-1402

VERIZON PENNSYLVANIA
900 RACE STREET, 6TH FLOOR
PHILADELPHIA, PA 19107
(215) 351-8947

AT&T LOCAL SERVICES
2315 SALEM RD A10
CONYERS, GA 33013
(770) 929-4584

COMCAST CABLE COMMUNICATIONS INC.
55 INDUSTRIAL DR
IVYLAND, PA 18974
(215) 918-3137

PECO ENERGY COMPANY
400 PARK AVE
WARMINSTER, PA 18974
(215) 956-3121

BUCKS COUNTY WATER AND SEWER AUTHORITY
1275 ALMSHOUSE RD
WARRINGTON, PA 18976
(800) 222-2068

BENSALEM TOWNSHIP
3800 HULMEVILLE RD
BENSALEM, PA 19020
(215) 633-3733

40 0 10 25 40
SCALE IN FEET

UTILITY LEGEND

	EXISTING	PROPOSED
SANITARY SEWER MAIN	S	
WATER MAIN	W	
WATER BEND		
WATER TEE		
GATE VALVE	WV	
FIRE HYDRANT		
GAS	G	UG
GAS METER		
ELECTRIC	E	UE
TELEPHONE	T	T
UNDERGROUND TELE/ELEC		T&E
TRANSFORMER PAD		T
STORM PIPE	D	
SANITARY CLEANOUT		
SANITARY MANHOLE	S	

PENNSYLVANIA ONE CALL SYSTEM, INC. 1-800-242-1776 STOP. CALL BEFORE YOU DIG!

CALL BEFORE YOU DIG IN PA, TOLL FREE 1 - 800 - 242-1776
FOR FREE MARKOUTS TO LOCATE UNDERGROUND UTILITIES
" IT'S THE LAW "

Date	Description	No.
8/8/2016	REVISIONS PER TOWNSHIP AND COUNTY COMMENTS	1.

REVISIONS

BRIAN M. CONLON DATE
PROFESSIONAL ENGINEER
PA Lic. No. PE061782

LANGAN
30 South 17th Street, Suite 1300, Philadelphia, PA 19103
T: 215.864.0640 F: 215.864.0671 www.langan.com
NEW JERSEY NEW YORK CONNECTICUT PENNSYLVANIA OHIO VIRGINIA WASHINGTON DC FLORIDA NORTH DAKOTA CALIFORNIA ABU DHABI ATHENS DOHA DUBAI ISTANBUL
Langan Engineering, Environmental, Surveying and Landscape Architecture, D.P.C.
Langan Engineering and Environmental Services, Inc.
Langan CT, Inc.
Langan International LLC
Collectively known as Langan

Project
THE MARKETPLACE AT NESHAMINY
BENSALEM TOWNSHIP
BUCKS COUNTY PENNSYLVANIA

Drawing Title
UTILITY PLAN

Project No. 220048102	Drawing No. CU-101
Date 24 JUNE 2016	
Scale 1"=40'	
Drawn By TFH	
Checked By BMC	SHEET 25 OF 29

© 2016 Langan

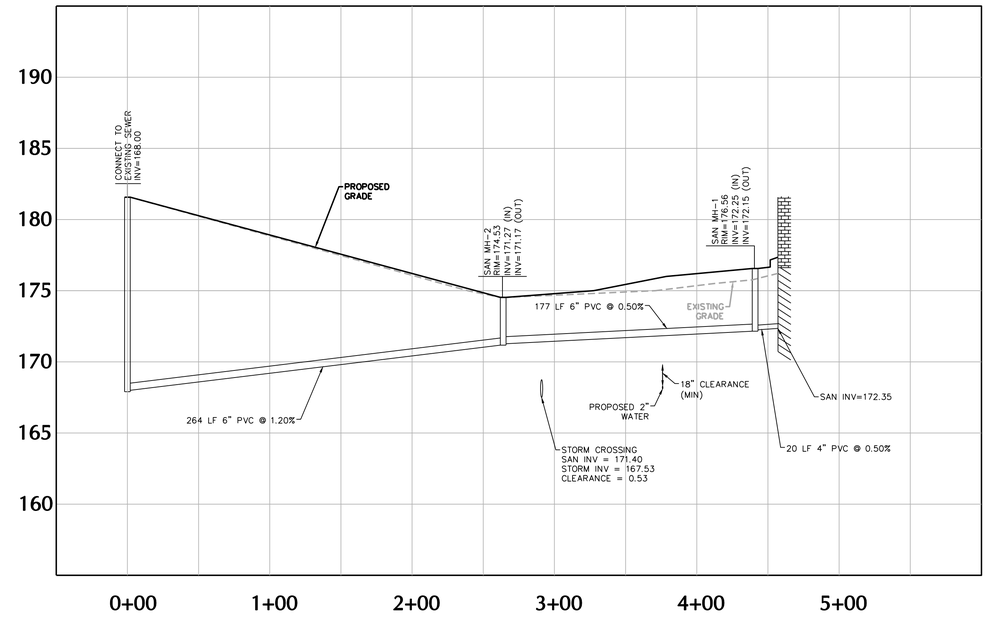

EX MH TO BUILDING (OUTPARCEL)

1"=50' HORIZONTAL 1"=5' VERTICAL

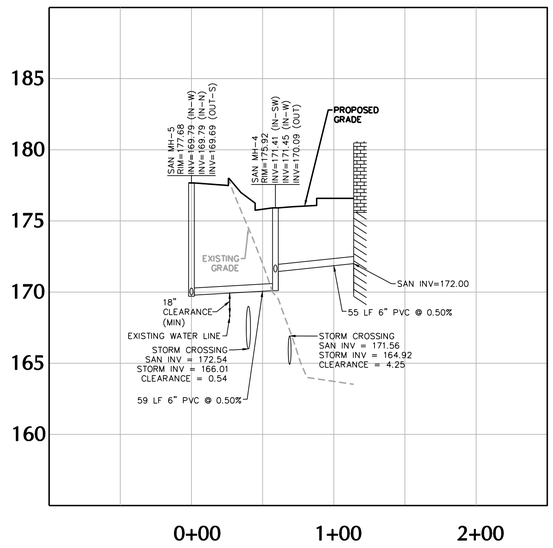

SAN MH-5 TO EB

1"=50' HORIZONTAL 1"=5' VERTICAL

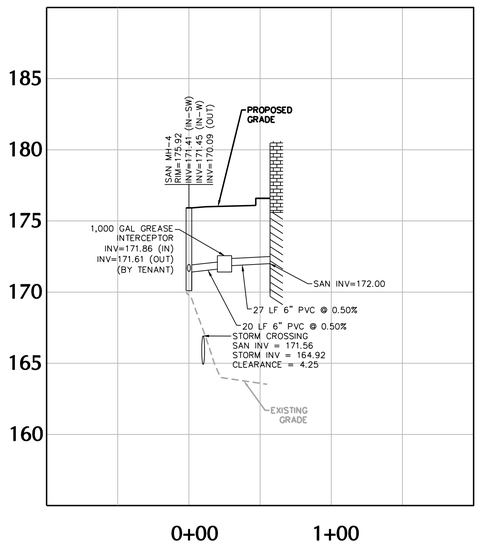

SAN MH-4 TO EB

1"=50' HORIZONTAL 1"=5' VERTICAL

No.	Description	Date
1.	REVISIONS PER TOWNSHIP AND COUNTY COMMENTS	8/8/2016

REVISIONS

BRIAN M. CONLON DATE
PROFESSIONAL ENGINEER
PA Lic. No. PE061782

LANGAN
30 South 17th Street, Suite 1300, Philadelphia, PA 19103
T: 215.864.0640 F: 215.864.0671 www.langan.com
NEW JERSEY NEW YORK CONNECTICUT PENNSYLVANIA OHIO VIRGINIA WASHINGTON DC FLORIDA NORTH DAKOTA CALIFORNIA ABU DHABI ATHENS DOHA DUBAI ISTANBUL
Langan Engineering, Environmental, Surveying and Landscape Architecture, D.P.C.
Langan Engineering and Environmental Services, Inc.
Langan CT, Inc.
Langan International LLC
Collectively known as Langan

Project

THE MARKETPLACE AT NESHAMINY

BENSALEM TOWNSHIP
BUCKS COUNTY PENNSYLVANIA

Drawing Title

SANITARY SEWER PROFILE

Project No. 220048102	Drawing No. CU-201
Date 24 JUNE 2016	
Scale AS SHOWN	
Drawn By TFH	
Checked By BMC	SHEET 26 OF 29

© 2016 Langan

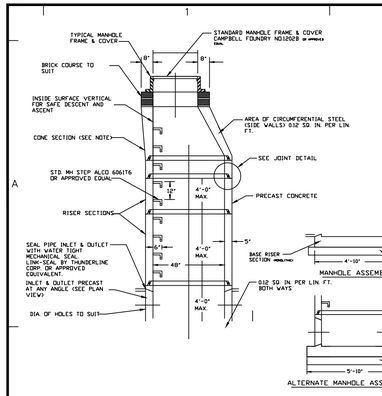

SANITARY MANHOLE DETAIL

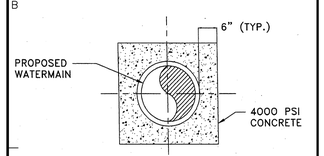

CONCRETE ENCASEMENT

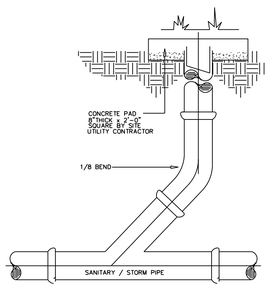

SEWER CLEANOUT DETAIL

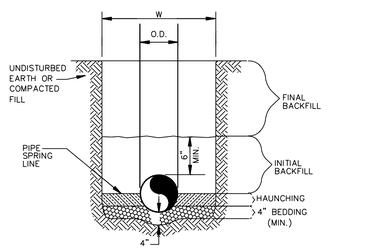

SANITARY SEWER

N.T.S.

PIPE DIA.	W
≤12"	O.D. OF PIPE + (12" TO 18")
>12"	≥ O.D. OF PIPE + 18"

GENERAL NOTES

1. BEDDING SHALL BE CLASS I-A WORKED BY HAND. IF GROUNDWATER IS ANTICIPATED, THEN BEDDING SHALL BE CLASS I-B COMPACTED TO 85% STANDARD PROCTOR.
2. HAUNCHING SHALL BE WORKED AROUND THE PIPE BY HAND TO ELIMINATE VOIDS AND SHALL BE CLASS I-A OR CLASS I-B OR CLASS II COMPACTED TO 85% PROCTOR.
3. INITIAL BACKFILL SHALL BE CLASS I-A WORKED BY HAND, OR CLASS I-B OR CLASS II COMPACTED TO 85% STANDARD PROCTOR.
4. INITIAL BACKFILL NOT UNDER PAVED AREAS CAN BE CLASS III COMPACTED TO 90% STANDARD PROCTOR.
5. FINAL BACKFILL SHALL BE CLASS I, II, OR III COMPACTED AS NOTED IN NOTES 3. AND 4.
6. FINAL BACKFILL NOT UNDER PAVED AREAS CAN BE CLASS IV-A COMPACTED TO 95% STANDARD PROCTOR.
7. ALL MATERIALS ARE CLASSIFIED IN ACCORDANCE WITH ASTM D 2321-89.
8. ALL MATERIALS SHALL BE INSTALLED IN MAXIMUM 8" LOOSE LIFTS IN ACCORDANCE WITH ASTM D 698. CLASS III AND IV-A MATERIALS SHALL BE COMPACTED NEAR OPTIMUM MOISTURE CONTENT.
9. FILL SALVAGED FROM EXCAVATION SHALL BE FREE OF DEBRIS, ORGANICS AND ROCKS LARGER THAN 3".
10. ALL TRENCH EXCAVATIONS SHALL BE SLOPED, SHORED, SHEETED, BRACED, OR OTHERWISE SUPPORTED IN COMPLIANCE WITH OSHA REGULATIONS AND LOCAL ORDINANCES.

PIPE BEDDING

1. MATERIAL FOR BACKFILL, IF ACCEPTABLE TO THE ENGINEER OR HIS REPRESENTATIVE, SHALL BE THE MATERIAL EXCAVATED, EXCEPT THAT LARGE AND FROZEN LUMPS, WOOD, BOULDERS OR OTHER FOREIGN MATTER SHALL BE REMOVED BEFORE PLACING.
2. IF THE EXCAVATED MATERIAL IS NOT ACCEPTABLE AS BACKFILL MATERIAL, ALL EXCAVATIONS SHALL BE BACKFILLED WITH RUN-OF-BANK SAND OR GRAVEL. ALL EXCESS EXCAVATED MATERIAL WILL BE DISPOSED OF BY THE CONTRACTOR IN A MANNER ACCEPTABLE TO THE ENGINEER.
3. THE CONTRACTOR SHALL COMPLETE ALL EXCAVATION OF WHATEVER CONDITIONS ARE ENCOUNTERED TO THE DEPTH SHOWN ON THE PLANS.
4. EXCAVATION SHALL NOT BE CARRIED BELOW THE REQUIRED LEVEL EXCEPT WHERE UNSTABLE SOIL IS ENCOUNTERED. THE ENGINEER SHALL DETERMINE THE DEPTH OF REMOVAL OF UNSTABLE SOIL, AND THE CONTRACTOR SHALL AT THE ENGINEER'S DIRECTION, REMOVE AND REPLACE SAME WITH GRAVEL, CRUSHED STONE OR CRUSHED SLAG THOROUGHLY TAMPED. WHENEVER EXCAVATION HAS BEEN MADE BELOW THE REQUIRED LEVEL, IT SHALL BE REPLACED WITH GRAVEL, CRUSHED STONE OR CRUSHED SLAG AND SHALL BE THOROUGHLY TAMPED.
5. GROUND ADJACENT TO THE EXCAVATIONS SHALL BE GRADED TO PREVENT WATER FROM RUNNING IN. THE CONTRACTOR SHALL REMOVE ANY WATER ACCUMULATING IN EXCAVATIONS BY PUMPING OR OTHER SUITABLE MEANS.
6. THE CONTRACTOR SHALL DO ALL BRACING, SHORING AND SHEETING NECESSARY TO PREVENT FAILURE OF THE BANKS OF THE EXCAVATION AND TO PROTECT THE WORK, WORKMEN, PUBLIC, UNDER-AND ABOVEGROUND UTILITIES AND STRUCTURES, PAVEMENTS AND PUBLIC AND PRIVATE PROPERTY. NO BRACING, SHORING OR SHEETING SHALL BE PLACED BELOW THE BOTTOM OF THE PIPE OR STRUCTURE UNLESS APPROVED BY THE ENGINEER.
7. THE CONTRACTOR SHALL PROVIDE, INSTALL AND OPERATE AN ADEQUATE WELL-POINT SYSTEM OF DEWATERING WHEN NECESSARY TO STABILIZE TRENCH BOTTOMS AND BANKS OR OTHER EXCAVATIONS OR, WHEN NECESSARY, TO PROTECT THE WORK, WORKMEN, PUBLIC, UNDER AND ABOVEGROUND UTILITIES AND STRUCTURES, PAVEMENTS AND PUBLIC AND PRIVATE PROPERTY. THE WELL-POINT SYSTEM OR PORTIONS THEREOF SHALL BE REMOVED BY THE CONTRACTOR UPON THE COMPLETION OF BACKFILL AND THE HOLES REMAINING FROM THE POINTS SHALL BE BACKFILLED AND THOROUGHLY TAMPED.
8. EXCAVATION FOR MANHOLES AND OTHER STRUCTURES SHALL HAVE A TWELVE-INCH MINIMUM CLEARANCE AND TWENTY-FOUR-INCH MAXIMUM CLEARANCE ON ALL SIDES. THE WIDTH OF TRENCHES FOR PIPE SHALL BE NOT LESS THAN SIXTEEN (16) INCHES AND NOT MORE THAN TWENTY-TWO (22) INCHES IN EXCESS OF THE OUTSIDE DIAMETER OF THE PIPE. ROCKS AND BOULDERS PRESENT IN EXCAVATION SHALL BE REMOVED WITHIN SIX (6) INCHES OF THE PIPE. BANKS OF EXCAVATIONS, UNLESS OTHERWISE INDICATED OR ALLOWED, SHALL BE VERTICAL.
9. PRELIMINARY EXCAVATION SHALL BE MADE TO A DEPTH OF THREE (3) INCHES ABOVE THE FINAL DEPTH OF ANY TRENCH OR OTHER EXCAVATION. THE REMAINING DEPTH SHALL BE CAREFULLY EXCAVATED, SHAPED AND FORMED WITH HAND TOOLS IMMEDIATELY PRECEDING LAYING OF PIPE OR PLACING CONCRETE. TRENCH BOTTOMS SHALL BE ACCURATELY FORMED TO RECEIVE AND SUPPORT THE BOTTOM OF THE BARREL OF THE PIPE. ADDITIONAL EXCAVATION SHALL BE MADE IN PIPE TRENCHES AT THE PIPE JOINTS AND TO PREVENT ANY POSSIBILITIES OF A PIPE RESTING ON THE BELL RATHER THAN THE BARREL.
10. AFTER THE STRUCTURE HAS BEEN COMPLETED, INSPECTED AND APPROVED OR, IN THE CASE OF PIPE, AFTER EACH JOINT HAS BEEN MADE, INSPECTED AND APPROVED, BACKFILLING SHALL PROCEED IMMEDIATELY, WHERE PIPE HAS BEEN LAID, THIS SHALL BE DONE IN FOUR-INCH LAYERS OF SUITABLE MATERIAL, EACH LAYER THOROUGHLY TAMPED, TO A HEIGHT OF TWELVE (12) INCHES ABOVE THE TOP OF THE PIPE. THE REMAINDER OF THE TRENCH AND THE ENTIRE EXCAVATION FOR ALL STRUCTURES OTHER THAN PIPE SHALL BE BACKFILLED IN EIGHT-INCH MAXIMUM LAYERS, LOOSE MEASURES, EACH LAYER THOROUGHLY COMPACTED. DAMPENING OF THE MATERIAL TO BE TAMPED MAY BE REQUIRED BY THE ENGINEER.
11. PUDDLING OR FLUSHING IN LIEU OF TAMPING MAY BE USED IF APPROVED BY THE ENGINEER OR MAY BE REQUIRED BY THE ENGINEER. SHORING, SHEETING AND BRACING OF ANY KIND SHALL BE WITHDRAWN AS THE BACKFILLING PROCEEDS, EXCEPT THAT THE ENGINEER MAY REQUIRE SUCH BRACING TO BE LEFT IN PLACE IF IT HAS BEEN PLACED BELOW THE BOTTOM OF ANY STRUCTURE OR PIPE OR IF HE DEEMS IT NECESSARY IN ORDER TO PROTECT ADJACENT STRUCTURES, UTILITIES OR PROPERTY.
12. EXISTING WATER SERVICE SHALL NOT BE INTERRUPTED UNLESS NECESSARY FOR THE COMPLETION OF THE WORK AND THEN ONLY IN ACCORDANCE WITH THE REQUIREMENTS OF THE AUTHORITY.
13. CURB STOPS ARE REQUIRED FOR ALL DOMESTIC AND FIRE SERVICE LATERAL CONNECTIONS.

UTILITY NOTES

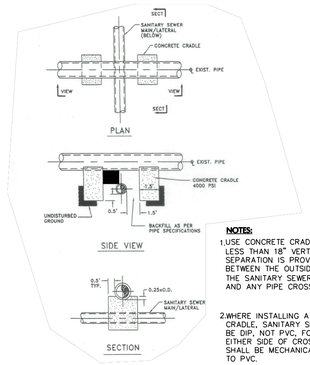

NOTES:

1. USE CONCRETE CRADLES WHERE LESS THAN 18" VERTICAL SEPARATION IS PROVIDED BETWEEN THE OUTSIDE WALL OF THE SANITARY SEWER/LATERAL AND ANY PIPE CROSSING ABOVE.
2. WHERE INSTALLING A CONCRETE CRADLE, SANITARY SEWER SHALL BE DIP, NOT PVC, FOR 10 LF ON EITHER SIDE OF CROSSING. DIP SHALL BE MECHANICALLY JOINTED TO PVC.

CONCRETE CRADLE

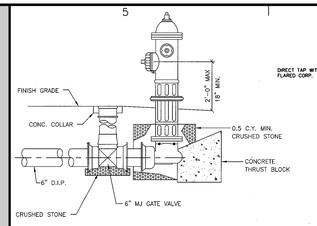

TYPICAL HYDRANT DETAIL

NOT TO SCALE

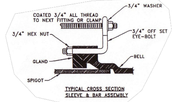

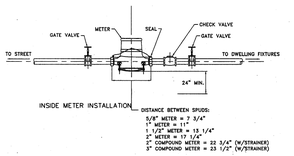

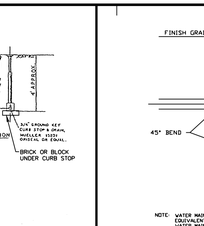

WATER MAIN APPURTENANCES

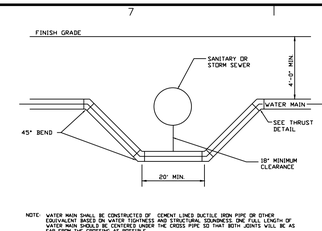

NOTE: WATER MAIN SHALL BE CONSTRUCTED OF CEMENT-LINED DUCTILE IRON PIPE OR OTHER EQUIVALENT BASED ON WATER TIGHTNESS AND STRUCTURAL SOUNDNESS ONE FULL LENGTH OF WATER MAIN SHOULD BE CENTERED UNDER THE CROSS PIPE SO THAT BOTH JOINTS WILL BE AS FAR FROM THE CROSSING AS POSSIBLE.

NOTE:
WATER MAIN SHALL BE CONSTRUCTED OF CEMENT LINED DUCTILE IRON PIPE OR OTHER EQUIVALENT BASED ON WATER TIGHTNESS AND STRUCTURAL SOUNDNESS. ONE FULL LENGTH OF WATER MAIN SHOULD BE CENTERED UNDER THE CROSS PIPE SO THAT BOTH JOINTS WILL BE AS FAR FROM THE CROSSING AS POSSIBLE.

WATERMAIN DROP

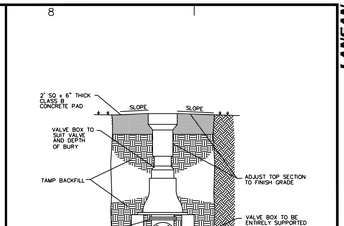

GATE VALVE & VALVE BOX

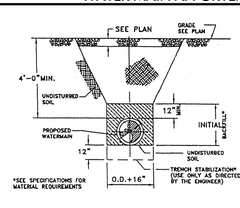

GRAVEL OR STONE AREAS

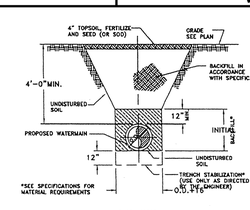

TURF AREAS

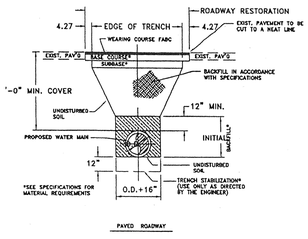

NOTES:

1. BACKFILL MATERIAL IN TRENCHES WITHIN PAVEMENT AREAS SHALL BE DENSE GRADED AGGREGATE ABOVE THE PIPE CRADLE, COMPACTED IN 6" LIFTS OVER THE PROPOSED PIPE.
2. IN ALL AREAS OF CURB REMOVAL, PIPE REMOVAL, INLET REMOVAL, ETC., VOIDS SHALL BE BACKFILLED WITH DENSE GRADED AGGREGATE. APPROVED STRUCTURAL FILL MATERIAL SHALL BE UTILIZED UNDER THE BUILDING FOUNDATIONS.

TRENCH CONSTRUCTION AND WATER MAIN PIPE INSTALLATION

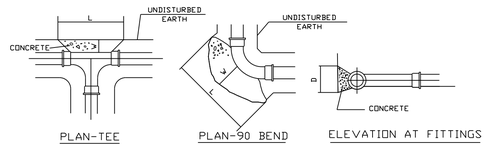

THRUST BLOCK SCHEDULE

PIPE SIZE	TEE L	TEE D	22 1/2 L	22 1/2 D	45 L	45 D	90 L	90 D	W
6"	18"	15"	15"	12"	15"	12"	15"	15"	21"
8"	2'	18"	18"	12"	18"	12"	2'	18"	2'
12"	3'	2'	2'	12"	2'	12"	3'	2'	28"
16"	4'	2.5'	2'	12"	2.33'	15"	4'	2.5'	31"
20"	5.25'	3'	2'	18"	3'	2'	5.25'	3'	33"
24"	7.5'	3'	3'	18"	4'	2.5'	7.5'	3'	3'

BASIS:
2,000 LB/SQFT. SOIL RESISTANCE
250 PSI WATER PRESSURE
CORRECTION FACTORS FOR OTHER SOILS:

SOFT CLAY	4
SAND	2
SAND & GRAVEL	1.33
SHALE	0.4

NOTE:
1. IF SOFT MATERIALS ARE ENCOUNTERED THE THRUST BLOCKS SIZES SHALL BE ADJUSTED ACCORDINGLY.
2. CONCRETE TO BE 3000 psi.

THRUST BLOCKS

Date	Description	No.
8/8/2016	REVISIONS PER TOWNSHIP AND COUNTY COMMENTS	1.

REVISIONS

BRIAN M. CONLON — DATE
PROFESSIONAL ENGINEER
PA Lic. No. PE061782

LANGAN
30 South 17th Street, Suite 1300, Philadelphia, PA 19103
T: 215.864.0640 F: 215.864.0671 www.langan.com
NEW JERSEY NEW YORK CONNECTICUT PENNSYLVANIA OHIO VIRGINIA WASHINGTON DC FLORIDA NORTH DAKOTA CALIFORNIA ABU DHABI ATHENS DOHA DUBAI ISTANBUL
Langan Engineering, Environmental, Surveying and Landscape Architecture, D.P.C.
Langan Engineering and Environmental Services, Inc.
Langan CT, Inc.
Langan International LLC
Collectively known as Langan

Project

THE MARKETPLACE AT NESHAMINY

BENSALEM TOWNSHIP
BUCKS COUNTY — PENNSYLVANIA

Drawing Title

SEWER AND WATER CONSTRUCTION NOTES & DETAILS

Project No. 220048102	Drawing No. CU-501
Date 24 JUNE 2016	
Scale N.T.S.	
Drawn By TFH	
Checked By BMC	SHEET 27 OF 29

©2016 Langan

SANITARY SEWER

WATER

SITE LIGHTING SCHEDULE

SYMBOL	KEY	QTY.	FIXTURE MANUFACTURER	FIXTURE MODEL	FIXTURE DESCRIPTION	FIXTURE MOUNTING HEIGHT	LAMP	OPTICS	LUMENS	LLF	FIXTURE CATALOGUE NO.	POLE MANUFACTURER	POLE DESCRIPTION	POLE LENGTH	POLE CATALOGUE NO.
▣	A	1	COOPER LIGHTING – STREETWORKS	GALLERIA SQUARE	POLE MOUNTED AREA LIGHT	30'	400W PULSE START METAL HALIDE	TYPE 3	40,000	0.72	GL-A-40-P-X-X-3D-BZ-F	EATON	ROUND TAPERED STEEL	30'	RTS8A30S-F-M-1
▣	B	2	COOPER LIGHTING – STREETWORKS	GALLERIA SQUARE	POLE MOUNTED AREA LIGHT	30'	1,000W PULSE START METAL HALIDE	TYPE 3	106,700	0.72	GL-A-91-P-X-X-3D-BZ-F	EATON	ROUND TAPERED STEEL	30'	RTS8A30S-F-M-1
▣	C	2	COOPER LIGHTING – INVUE	VISION WALL MEDIUM	WALL MOUNTED AREA LIGHT	16'	150W PULSE START METAL HALIDE	TYPE 2S	14,000	0.72	VWM-150-MP-X-2S-BZ	N/A	--	--	--
▣	D	1	COOPER LIGHTING – INVUE	VISION WALL MEDIUM	WALL MOUNTED AREA LIGHT	18'	250W PULSE START METAL HALIDE	TYPE 4S	22,000	0.72	VWM-250-MP-X-4S-BZ	N/A	--	--	--
●	E	5	COOPER LIGHTING – LUMIERE	WESTWOOD	DECORATIVE WALL MOUNTED LIGHT	10'	39W METAL HALIDE	N/A	2,000	0.72	714-1-MH39PAR20X-CS-MHP2039-FL	N/A	--	--	--

STATISTICS

DESCRIPTION	AVG.	MAX.	MIN.	MAX./MIN.	AVG./MIN.
LOADING	1.37FC	6.2FC	0.2FC	31.00:1	6.85:1
PARKING	2.39FC	10.4FC	0.7FC	14.86:1	3.41:1

NOTE: EXISTING LIGHT LEVELS WERE MODELED USING A 1,000 WATT METAL HALIDE FIXTURE MOUNTED AT 35' ABOVE GRADE (INFORMATION PROVIDED BY PARAMOUNT REALTY) TO PROVIDE APPROXIMATE EXISTING LIGHT LEVELS. NO FIELD VERIFICATION OF LIGHT LEVELS WAS PERFORMED.

RETAIL A
10,691 SF

RETAIL B
2, 333 SF

RETAIL C
2, 333 SF

RETAIL D
2, 333 SF

RETAIL E
2, 263 SF

RESTAURANT A
5,000 SF

RETAIL F
2,600 SF

RETAIL/RESTAURANT
16,862 SF (TOTAL)

0.5 FOOTCANDLES, TYP.

1.0 FOOTCANDLES, TYP.

EXISTING ISOLUX LINES, TYP.

EXISTING LIGHT FIXTURE TO REMAIN OR BE REPLACED, TYP.

EXISTING LIGHT FIXTURE TO REMAIN, TYP.

DECORATIVE WALL MOUNTED LIGHT FIXTURE, TYP.

WALL MOUNTED LIGHT FIXTURE, TYP.

POLE MOUNTED LIGHT FIXTURE, TYP.

CONTRACTOR TO REMOVE EXISTING FIXTURES TEMPORARILY AND REINSTALL AFTER CONSTRUCTION OF SUBSURFACE INFILTRATION BASIN

Masonry Retaining Wall

ROCKHILL DRIVE

Electric Transformers and Junction Box

SCALE IN FEET
40 0 10 25 40

REFER TO SHEET LL501 FOR LIGHTING NOTES AND DETAILS.

Date	Description	No.
8/8/2016	REVISIONS PER TOWNSHIP AND COUNTY COMMENTS	1.

REVISIONS

JAYNE O. SPECTOR — DATE
LANDSCAPE ARCHITECT
P.A. Lic. No. LA001000R

LANGAN
30 South 17th Street, Suite 1300, Philadelphia, PA 19103
T: 215.864.0640 F: 215.864.0671 www.langan.com
NEW JERSEY NEW YORK CONNECTICUT PENNSYLVANIA OHIO VIRGINIA WASHINGTON DC FLORIDA NORTH DAKOTA CALIFORNIA ABU DHABI ATHENS DOHA DUBAI ISTANBUL
Langan Engineering, Environmental, Surveying and Landscape Architecture, D.P.C.
Langan Engineering and Environmental Services, Inc.
Langan CT, Inc.
Langan International LLC
Collectively known as Langan

Project

THE MARKETPLACE AT NESHAMINY

BENSALEM TOWNSHIP
BUCKS COUNTY PENNSYLVANIA

Drawing Title

LIGHTING PLAN

Project No. 220048102	Drawing No. LL-101
Date 24 JUNE 2016	
Scale 1"=40'	
Drawn By JP	
Checked By JOS	SHEET 28 OF 29

© 2016 Langan

Filename: \\langan.com\data\PH\data1\220048102\Cadd Data - 220048102\SheetFiles\2016.08.08 - NPDES Revised Submission\220048102-LL-101.dwg Date: 8/15/2016 Time: 09:40 User: ddonchez Style Table: Langan.stb Layout: LP-101

LANGAN

LIGHTING NOTES:

1. POINT-BY-POINT CALCULATIONS PROVIDED WITHIN HAVE BEEN PREPARED IN ACCORDANCE TO IESNA STANDARDS AND IN CONSIDERATION OF THE VARIABLES WITHIN THESE NOTES AND SITE LIGHTING SCHEDULE. THE VALUES SHOWN ON THE PLANS ARE NOT AN INDICATION OF THE INITIAL LIGHT INTENSITIES OF THE LAMPS. THESE VALUES ARE AN APPROXIMATION OF THE MAINTAINED INTENSITIES DELIVERED TO THE GROUND PLANE USING INDUSTRY ACCEPTABLE LIGHT LOSS FACTORS (LLF) WHICH COVER LAMP DEGRADATION AND NATURAL BUILDUP ON THE FIXTURE LENS. THE LIGHTING PLAN IS DESIGNED WITH AN INDUSTRY ACCEPTABLE LLF TO ENSURE ADEQUATE LIGHT INTENSITIES OVER YEARS OF USE AND WEAR. MINOR VARIATIONS IN TOPOGRAPHY, PHYSICAL OBSTRUCTIONS, AMBIENT OR ADJACENT LIGHT SOURCES AND/OR OTHER POTENTIAL IMPACTS HAVE NOT BEEN INCLUDED IN THESE CALCULATIONS. THEREFORE, AS-BUILT LIGHT INTENSITIES MAY VARY, IN EITHER DIRECTION, FROM WHAT IS EXPLICITLY PORTRAYED WITHIN THESE DRAWINGS.
2. PROVIDE A CONCRETE BASE FOR EACH LIGHT POLE AT THE LOCATIONS INDICATED ON THE CONSTRUCTION DRAWINGS AND IN ACCORDANCE WITH PROJECT PLANS AND SPECIFICATIONS RELATING DIRECTLY TO CAST-IN-PLACE CONCRETE.
3. CONTRACTOR TO COORDINATE INSTALLATION OF UNDERGROUND FEEDER CABLE FOR EXTERIOR LIGHTING WITH EXISTING AND PROPOSED UTILITIES, SITE DRAINAGE SYSTEMS, AND PAVING. CONTRACTOR SHALL PROMPTLY NOTIFY THE OWNER'S REPRESENTATIVE SHOULD ANY UTILITIES, NOT SHOWN ON THE PLANS, BE FOUND DURING EXCAVATIONS.
4. CONTRACTOR TO OPERATE EACH LUMINAIRE AFTER INSTALLATION AND CONNECTION. INSPECT FOR IMPROPER CONNECTIONS AND OPERATION.
5. AIM AND ADJUST ALL LUMINAIRES TO PROVIDE ILLUMINATION LEVELS AND DISTRIBUTION AS INDICATED ON THE CONSTRUCTION DRAWINGS OR AS DIRECTED BY THE LANDSCAPE ARCHITECT AND/OR OWNER.
6. CONTRACTOR TO COORDINATE INSTALLATION OF ALL THE WALL MOUNTED FIXTURES AND ELECTRICAL CONNECTIONS TO SITE STRUCTURE(S) WITH BUILDING MEP, ARCHITECT, AND/OR OWNER.
7. INSTALLATION OF ALL LIGHTING FIXTURES, POLES, FOOTINGS, AND FEEDER CABLE TO BE COORDINATED WITH ALL SITE WORK TRADES TO AVOID CONFLICT WITH FINISHED AND PROPOSED WORK.
8. POINT SPACING ON PLACE OF CALCULATION IS 10 FT. LEFT TO RIGHT AND 10 FT. TOP TO BOTTOM. POINT BY POINT CALCULATIONS ARE BASED ON A 0.72 MAINTENANCE FACTOR.
9. ALL SITE LIGHTING RELATED WORK AND MATERIALS SHALL COMPLY WITH CITY, COUNTY, AND OTHER APPLICABLE GOVERNING AUTHORITY REQUIREMENTS.
10. SITE ELECTRICAL CONTRACTOR TO COORDINATE LOCATION OF EASEMENTS, UNDERGROUND UTILITIES AND DRAINAGE BEFORE DRILLING POLE BASES.
11. SITE ELECTRICAL CONTRACTOR TO COORDINATE POWER SOURCE WITH LIGHT FIXTURES TO INSURE ALL SITE LIGHTING IS OPERATING EFFECTIVELY, EFFICIENTLY AND SAFELY.
12. SITE ELECTRICAL CONTRACTOR SHALL CONFIRM THAT LIGHT FIXTURES MATCH SPECIFICATIONS ON THE PLANS.
13. REFER TO ELECTRIFICATION PLAN FOR PROVIDING ADEQUATE POWER FOR SITE LIGHTING.
14. SITE ELECTRICAL CONTRACTOR SHALL EXAMINE AND VERIFY THAT SOIL CONDITIONS ARE SUITABLE TO SUPPORT LOADS EXERTED UPON THE FOUNDATIONS DURING EXCAVATION. CONTRACTOR SHALL NOTIFY ENGINEER OF ANY UNSATISFACTORY CONDITIONS.
15. POLE FOUNDATIONS SHALL NOT BE POURED IF FREE STANDING WATER IS PRESENT IN EXCAVATED AREA.
16. ELECTRICIAN AND INSTALLATION OF WALL MOUNTED FIXTURES SHALL BE COORDINATED WITH THE ARCHITECTURAL, STRUCTURAL, AND SITE DRAWINGS FOR SAFETY AND TO PROVEN EXPOSED WIRING.
17. LIGHTING SUBSTITUTION REQUIREMENTS:
ALL LIGHTING SUBSTITUTIONS MUST BE MADE WITHIN 14 DAYS PRIOR TO THE BID DATE TO PROVIDE AMPLE TIME FOR REVIEW AND TO ISSUE AN ADDENDUM INCORPORATING THE SUBSTITUTION WITH THE FOLLOWING REQUIREMENTS:
   A. ANY SUBSTITUTION TO LIGHTING FIXTURES, POLES, ETC. MUST BE APPROVED BY THE OWNER, ENGINEER AND TENANTS. ANY COST ASSOCIATED WITH REVIEW AND/OR APPROVAL OF THE SUBSTITUTIONS SHALL BE ENTIRELY BORNE BY THE CONTRACTOR
   B. COMPUTER PREPARED PHOTOMETRIC LAYOUT OF THE PROPOSED LIGHTED AREA WHICH INDICATES, BY ISOFOOTCANDLE, THE SYSTEM'S PERFORMANCE.
   C. A PHOTOMETRIC REPORT FROM A NATIONAL INDEPENDENT TESTING LABORATORY WITH REPORT NUMBER, DATE, FIXTURE CATALOG NUMBER, LUMINAIRE AND LAMP SPECIFICATIONS; IES CALCULATIONS, CANDLEPOWER TABULATIONS, ZONE LUMEN SUMMARY, ISOLUX PLOT, AND CATALOGUE CUTS. CATALOGUE CUTS MUST IDENTIFY, BUT NOT LIMITED TO, OPTICS, LAMP TYPE, DISTRIBUTION TYPE, REFLECTOR, LENS, BALLASTS, WATTAGE, VOLTAGE, FINISH AND HOUSING DESCRIPTION.
   D. POLE MANUFACTURER AASHTO CALCULATIONS INDICATING THE POLE AND ANCHOR BOLTS BEING SUBMITTED ARE CAPABLE OF SUPPORTING THE POLE AND FIXTURE SYSTEMS BEING UTILIZED IN ACCORDANCE WITH THE CONTRACT DOCUMENTS.
   E. THE UNDERWRITERS LABORATORY LISTING AND FILE NUMBER FOR THE SPECIFIC FIXTURE(S) TO BE UTILIZED.
   F. A COLOR PHOTOGRAPH THAT CLEARLY SHOWS THE REPLACEMENT FIXTURE POLE MOUNTED, THE FIXTURE'S COLOR, FINISH, AND PHYSICAL CHARACTERISTICS.
18. PHOTOMETRIC LIGHTING TEMPLATE:

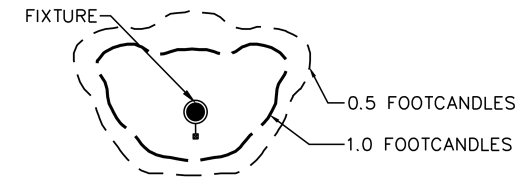

NOTE: THE PHOTOMETRIC TEMPLATE REPRESENTS LIGHT THROW FOR EACH INDIVIDUAL FIXTURE. IT DOES NOT REPRESENT LIGHT COMING FROM OTHER SOURCES.

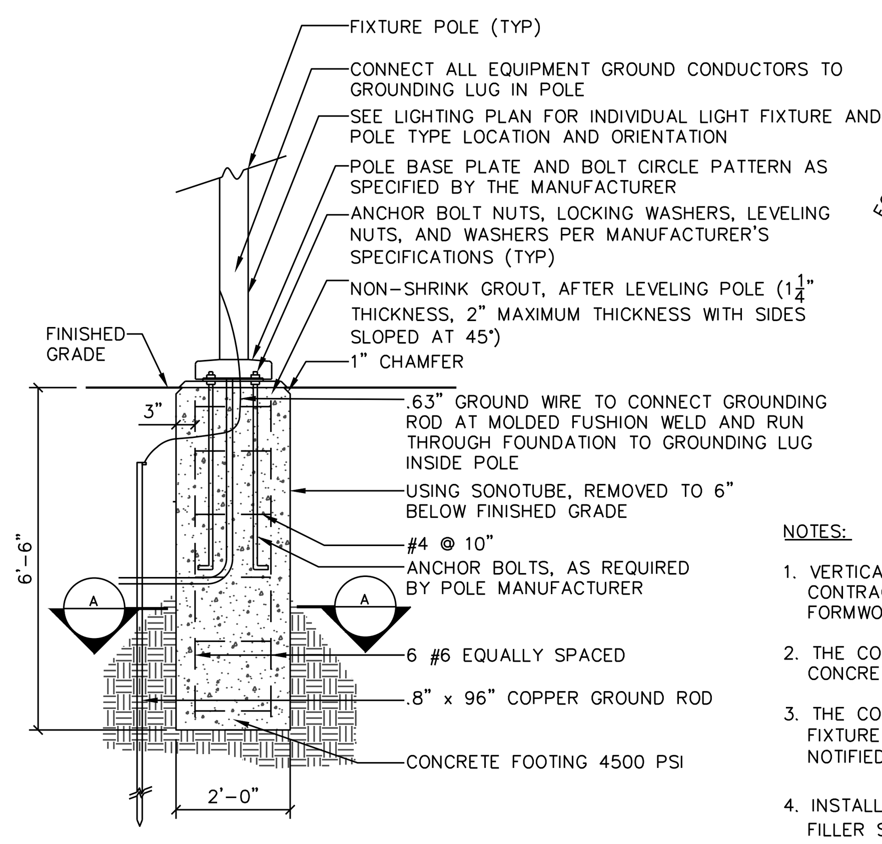

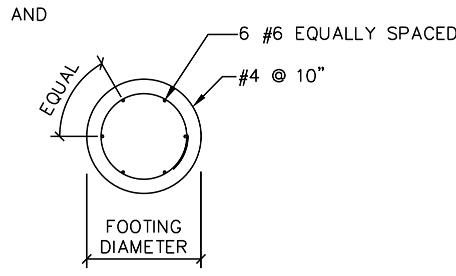

SECTION A-A

NOTES:

1. VERTICAL AND HORIZONTAL BARS SHALL BE FIELD TIED. WELDING IS NOT PERMITTED. THE CONTRACTOR SHALL SUPPORT REINFORCEMENT IN ITS PROPER LOCATION FROM THE FORMWORK DURING CONCRETE OPERATION.
2. THE CONTRACTOR SHALL REMOVE WATER PRESENT IN HOLE PRIOR TO POURING CONCRETE.
3. THE CONTRACTOR SHALL VERIFY ALL INFORMATION PERTAINING TO THE POLE AND FIXTURE INSTALLATION WITH THE MANUFACTURER. THE ENGINEER AND/OR OWNER TO BE NOTIFIED OF ANY DISCREPANCIES.
4. INSTALLATION OF POLE FOOTING IN CONCRETE PAVING REQUIRES 1/2" EXPANSION JOINT FILLER SEALED WITH JOINT SEALANT.
5. THE INFORMATION ILLUSTRATED IN THE LIGHT POLE FOUNDATION DETAIL HAS BEEN PROVIDED FOR GENERAL REFERENCE AND PRELIMINARY COST ESTIMATE PURPOSES. LIGHT POLE FOUNDATIONS SHOULD BE DESIGNED AND DETAILED BY A LICENSED STRUCTURAL ENGINEER BASED ON EXISTING SOIL CONDITIONS, LOCAL DESIGN STANDARDS AND MANUFACTURERS RECOMMENDATIONS.

1 LIGHT POLE FOUNDATION
NTS

Ⓔ STREETWORKS™ energy solutions

DESCRIPTION

The Galleria area light achieves superior light distribution by utilizing a seamless reflector system, making it the optimum choice for almost any small or medium area lighting application. U.L. listed for wet locations. CSA Certified.

Catalog #		Type
Project		
Comments		Date
Prepared by		

SPECIFICATION FEATURES

Housing
HOUSING: Formed aluminum housing with stamped reveal has interior-welded seams for structural integrity. Optional NEMA twistlock photocontrol. ANSI wattage/source label. DOOR: Formed aluminum door has heavy-duty hinges, captive retaining screws and is finished in polyester powder coat. (Spider mount unit has steel door.)

Electrical
BALLAST: Ballast is hard-mounted to housing interior for cooler operation. Optional removable ballast tray.

Optical
REFLECTOR: Spun and stamped aluminum reflector in vertical lamp units, or hydroformed anodized aluminum reflector in horizontal lamp units. LENS: Convex tempered glass lens. Tempered flat glass available.

Finish
Standard polyester powder coat finish in bronze. Standard colors include black, grey, white, dark platinum and graphite metallic.

GM/GL GALLERIA SQUARE

100 - 1000W
Pulse Start Metal Halide
High Pressure Sodium
Metal Halide

ARCHITECTURAL AREA LUMINAIRE

DIMENSIONS

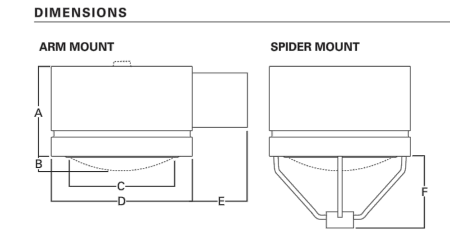

ARM DRILLING

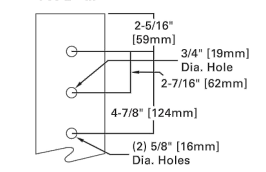

DIMENSIONAL DATA

Fixture	A	B	C	D	E	F
GM	11" [279mm]	3-1/2" [89mm]	19-1/4" [480mm]	21-3/4" [552mm]	6" [152mm]	15" [381mm]
					14" [356mm]	16" [406mm]
GL	14-1/2" [279mm]	4-1/4" [108mm]	25-7/8" [657mm]	27" [686mm]	6" [152mm]	18-3/4" [476mm]
					14" [356mm]	19-3/4" [502mm]

NOTE: Top cap used on GM with 1000W flat glass vertically lamped optics only.

CERTIFICATIONS
UL Listed
CSA Certified

EPA
Effective Projected Area:
GM: 2.4
GL: 3.9

SHIPPING DATA
Approximate Net Weight:
GM: 79 lbs. (36 kgs.)
GL: 88 lbs. (40 kgs.)

Cooper Lighting by EATON

ADW082663
2014-07-28 09:55:25

2 POLE MOUNTED AREA LIGHT
NTS

Steel Poles

RTS ROUND TAPERED STEEL

Catalog #		Type
Project		
Comments		Date
Prepared by		

FEATURES
- ASTM Grade steel base plate with ASTM A366 base cover
- Hand hole assembly 3" x 5" on RTS poles
- 20'-50' mounting heights
- Drilled or tenon (specify)

ORDERING INFORMATION

SAMPLE NUMBER: RTS8A30SF2XXG

Product Family	Shaft Size (Inches)[1]	Wall Thickness (Inches)	Mounting Height (Feet)	Base Type	Finish	Mounting Type	Number and Location of Arms	Arm Lengths (Feet)	Options (Add as Suffix)
RTS=Round Tapered Steel	**6**=6" **7**=7" **8**=8" **9**=9" Steel; 6-3/4" Aluminum **0**=10"	**A**=0.120" **D**=0.180"	**20**=20' **25**=25' **30**=30' **35**=35' **39**=39' **45**=45' **50**=50'	**S**=Square Steel Base	**F**=Dark Bronze **G**=Galvanized Steel **J**=Summit White **K**=Carbon Bronze **L**=Dark Platinum **P**=Primer Powder Coat **R**=Hartford Green **S**=Silver **T**=Graphite Metallic **V**=Grey **W**=White **X**=Custom Color **Y**=Black	**2**=2-3/8" O.D. Tenon (4" Long) **3**=3-1/2" O.D. Tenon (5" Long) **4**=4" O.D. Tenon (6" Long) **5**=3" O.D. Tenon (4" Long) **6**=2-3/8" O.D. Tenon (6" Long) **7**=4" O.D. Tenon (10" Long) **A**=Type A Drilling **C**=Type C Drilling **E**=Type E Drilling **F**=Type F Drilling **G**=Type G Drilling **J**=Type J Drilling **K**=Type K Drilling **M**=Type M Drilling **R**=Type R Drilling **S**=Standard Upsweep Arm **Z**=Type Z Drilling	**1**=Single **2**=2 at 180° **3**=Triple[2] **4**=4 at 90° **5**=2 at 90° **6**=3 at 90° **7**=2 at 120° **X**=None	**X**=None	**A**=1/2" Tapped Hub (Specify location desired) **B**=3/4" Tapped Hub (Specify location desired) **C**=Convenience Outlet[3] **E**=GFCI Convenience Outlet[3] **G**=Ground Lug **H**=Additional Hand Hole[4] **L**=Drilled for Bumper Glitter **V**=Vibration Dampener

NOTES: 1. All shaft sizes nominal. **2.** Square poles are 3 at 90°, round poles are 3 at 120°. **3.** Outlet is located 4' above base and on same side of pole as hand hole, unless specified otherwise. Receptacle not included, provision only. **4.** Additional hand hole is located 12" below pole top and 90° from standard hand hole location, unless otherwise specified.

DIMENSIONS

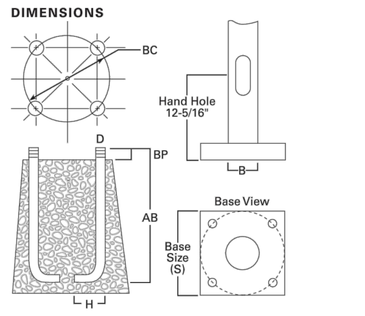

WARNING: Customer is responsible for engineering analysis to confirm pole and fixture compatibility for all applications. Refer to pole white paper WP513001EN for additional support information. Before installing, make sure proper anchor bolts and templates are obtained. The use of unauthorized accessories such as banners, signs, cameras or pennants for which the pole was not designed voids the pole warranty and may result in pole failure causing serious injury or property damage. Information regarding total loading capacity can be supplied upon request. The pole warranty is void unless poles are used and installed as a complete pole and luminaire combination. This warranty specifically excludes failure as the result of a third party act or omission, misuse, unanticipated uses, fatigue failure or similar phenomena resulting from induced vibration, harmonic oscillation or resonance associated with movement of air currents around the product.

Specifications and dimensions subject to change without notice. Consult your lighting representative at Eaton or visit www.eaton.com/lighting for available options, accessories and ordering information.

EATON Powering Business Worldwide

TD513014EN
2015-12-09 13:40:46

3 LIGHT POLE
NTS

Ⓔ INVUE® energy solutions

DESCRIPTION

The classic lines and sophisticated construction of the Vision Wall luminaire make it an ideal complement to architectural site design. IP65 ingress Rating standard. U.L. listed and CSA Certified for wet locations in up or down mounting applications with no necessary modifications to the door or housing.

Catalog #		Type
Project		
Comments		Date
Prepared by		

SPECIFICATION FEATURES

Construction
HOUSING: One piece die-cast aluminum construction for precise tolerance control and repeatability in manufacturing. DOOR: One piece die-cast aluminum with continuous silicone gasket accommodates either up or down mounting configurations. Door frame is hinged and secured to the housing via four (4) captive stainless steel Allen head fasteners. Lens is impact-resistant 1/8" thick tempered clear or optional frosted flat glass, sealed to the door with a one-piece silicone gasket.

Optical
OPTICAL SYSTEM: Choice of five (5) high efficiency optical systems. Type II, III, IV, and FX optical systems constructed of premium 95% reflective anodized aluminum sheet. Optical segments are rigidly mounted inside a heavy-wall aluminum housing for superior protection. All segment faces are clean of rivet heads, tabs, or other means of attachment which may cause streaking in the light distribution. TS optic constructed of spun and polished specular anodized aluminum. All reflector modules feature toolless removal, quick disconnect wiring plugs, and are field rotatable in 90 degree increments. HID lamp sources in VWM medium housing optics feature mogul-base lampholders. OPTICAL ASSEMBLY: Optical systems are secured to an internal rotating assembly that allows up to 10 degrees of outward adjustment. A concealed stainless steel adjustment screw is provided on the exterior surface of the housing to allow for tilt adjustment of the optical module while under full power without accessing internals of the fixture or affecting the outward appearance of the luminaire.

Mounting
Standard zinc plated attachment plate fits directly to 4" J-Box. Two (2) threaded studs with locking nuts allow for fixture mounting via keyhole slots on backside of housing. Mounting plate features one-piece EPDM gasket on either side of plate to firmly seal fixture to wall surface, forbidding entry of moisture and particulates. Optional mounting arrangements include an embedded mount bracket, or cast aluminum surface conduit adapter, each available as accessories.

Finish
Housing and door finished in a 5 stage premium TGIC polyester powder coat paint, 2.5 mil nominal thickness for superior protection against fade and wear. Standard colors include black, bronze, grey, white, dark platinum, and graphite metallic. RAL and custom color matches available. Consult your INVUE Lighting Systems Representative for more information.

VWM
VISION WALL MEDIUM

84 - 400W
Pulse Start Metal Halide
Metal Halide
High Pressure Sodium
Compact Fluorescent

ARCHITECTURAL WALL LUMINAIRE

DARK SKY COMPLIANT FCO Full Cutoff
NOTE: In downlight applications only.

DIMENSIONS

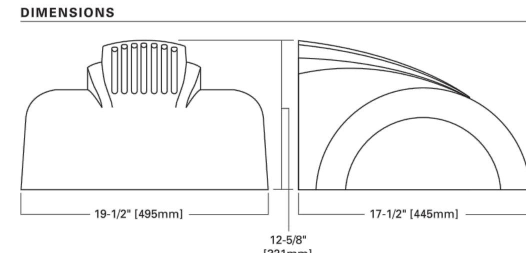

WATTAGE TABLE

Lamp Type	Wattage
Pulse Start Metal Halide (MP)Ⓔ	150, 175, 250, 320, 350, 400W
High Pressure Sodium (HPS)	150, 250, 400W
Metal Halide (MH)	175, 250, 400W
Compact Fluorescent (CF)	(2) 42, (2) 57, (2) 70W
NOTE: Ⓔ EISA Compliant: 175-400W.	

CERTIFICATION DATA
IP65 Rated
U.L. 1598 Listed
CSA Listed
25°C Ambient Temperature Rating
ISO 9001
Full Cutoff

SHIPPING DATA
(Approximate)
Net Weight (lbs.): 45
Volume (cu. ft): 13

COOPER Lighting
www.cooperlighting.com

AVU082420 pc
2010-06-29 15:33:34

4 WALL MOUNTED AREA LIGHT
NTS

LUMIÈRE®

DESCRIPTION

Westwood 714 and 714-2 are ultra-compact wall fixtures for use with PAR20 metal halide lamps. Both models are provided with a remote ballast/housing assembly and are suitable for use with 120, 208, 240, 277 or 347V line voltage (specify). Model 714 provides downlight or uplight by way of the 180° rotational fixture head. Model 714-2 provides combination uplight and downlight. Various lenses, louvers and color or dichroic filters can be combined - up to three at once - to create multiple lighting effects. Lumière's exclusive Siphon Protection System (S.P.S.) prevents water from siphoning into the fixture through its own lead wires.

Catalog #		Type
Project		
Comments		Date
Prepared by		

SPECIFICATION FEATURES

A ... Material
Housing and hood are precision-machined from corrosion-resistant 6061-T6 aluminum billet. Mounting canopy is constructed from corrosion-resistant silicone aluminum.

B ... Finish
Fixtures are double protected by a chromate conversion undercoating and polyester powdercoat paint finish, surpassing the rigorous demands of the outdoor environment. A variety of standard colors are available.

C ... Hood
Hood is removable for easy relamping and accepts up to three internal accessories at once (lenses, louvers, filters) to achieve multiple lighting effects. Weep holes prevent water collection on the uplight position.

D ... Gasket
Housing and hood are sealed with a high temperature silicone o-ring gasket to prevent water intrusion.

E ... Lens
Tempered glass lens, factory sealed with high temperature adhesive to prevent water intrusion and breakage due to thermal shock.

F ... Mounting & Adjustability
Both models mount over a standard 4" J-box and connect to a remote metal halide ballast/housing assembly (provided). Model 714 provides downlight or uplight by way of the 180° rotational fixture head. Model 714-2 provides combination uplight and downlight. Lumière's exclusive Siphon Protection System (S.P.S.) prevents water from siphoning into the fixture through its own lead wires.

G ... Hardware
Stainless steel hardware is standard to provide maximum corrosion-resistance.

H ... Socket
Ceramic socket with 250° C Teflon® coated lead wires and medium base.

I ... Ballast
Remote core & coil ballast is standard (120/208/240/277/347V). Maximum remote mounting distance for a core & coil ballast is 50'. Remote electronic ballast (120/277V) is available as an option by adding the prefix "EL" to the ballast/mounting code. Maximum remote mounting distance for an electronic ballast depends upon the ballast manufacturer and may require the use of special low capacitance wire, separate conduit runs for lead wires, or other special installation requirements. See ballast manufacturer's installation instructions or contact the factory for remote mounting distance and installation requirements.

J ... Lamp
Not included. Available from Lumière as an accessory - see reverse side of this page.

K ... Labels & Approvals
UL and cUL listed, standard wet label. IP65 rated. Manufactured to ISO 9001-2000 Quality Systems Standard. IBEW union made.

L ... Warranty
Lumière warrants its fixtures against defects in materials & workmanship for three (3) years. Auxiliary equipment such as transformers, ballasts and lamps carry the original manufacturer's warranty.

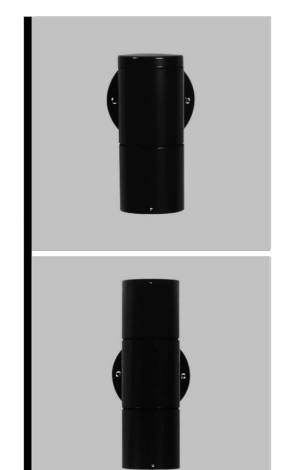

WESTWOOD
714
714-2

39W (max.) PAR20
Metal Halide

Wall

IP65

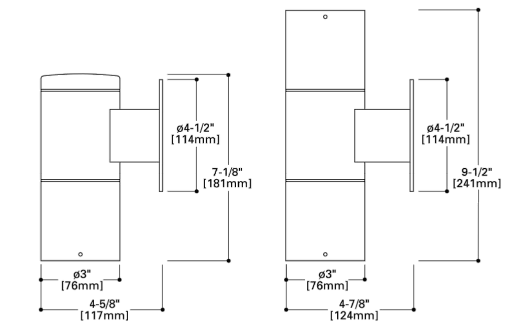

COOPER Lighting
www.cooperlighting.com

Specifications and Dimensions subject to change without notice.
Consult your representative for additional options and finishes.

ADL032482
07/09/2009 12:11:03 PM

5 DECORATIVE WALL MOUNTED AREA LIGHT
NTS

Date	Description	No.
8/8/2016	REVISIONS PER TOWNSHIP AND COUNTY COMMENTS	1.

REVISIONS

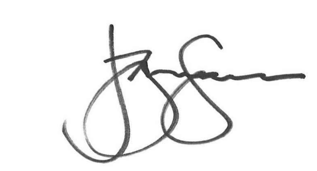

JAYNE O. SPECTOR DATE
LANDSCAPE ARCHITECT
P.A. Lic. No. LA001000R

LANGAN
30 South 17th Street, Suite 1300, Philadelphia, PA 19103
T: 215.864.0640 F: 215.864.0671 www.langan.com
NEW JERSEY NEW YORK CONNECTICUT PENNSYLVANIA OHIO
VIRGINIA WASHINGTON DC FLORIDA NORTH DAKOTA CALIFORNIA
ABU DHABI ATHENS DOHA DUBAI ISTANBUL

Langan Engineering, Environmental, Surveying and Landscape Architecture, D.P.C.
Langan Engineering and Environmental Services, Inc.
Langan CT, Inc.
Langan International LLC
Collectively known as Langan

Project

THE MARKETPLACE AT NESHAMINY

BENSALEM TOWNSHIP
BUCKS COUNTY PENNSYLVANIA

Drawing Title

LIGHTING NOTES AND DETAILS

Project No. 220048102	Drawing No.
Date 24 JUNE 2016	LL-501
Scale N.T.S.	
Drawn By JP	
Checked By JS	SHEET 29 OF 29

© 2014 Langan

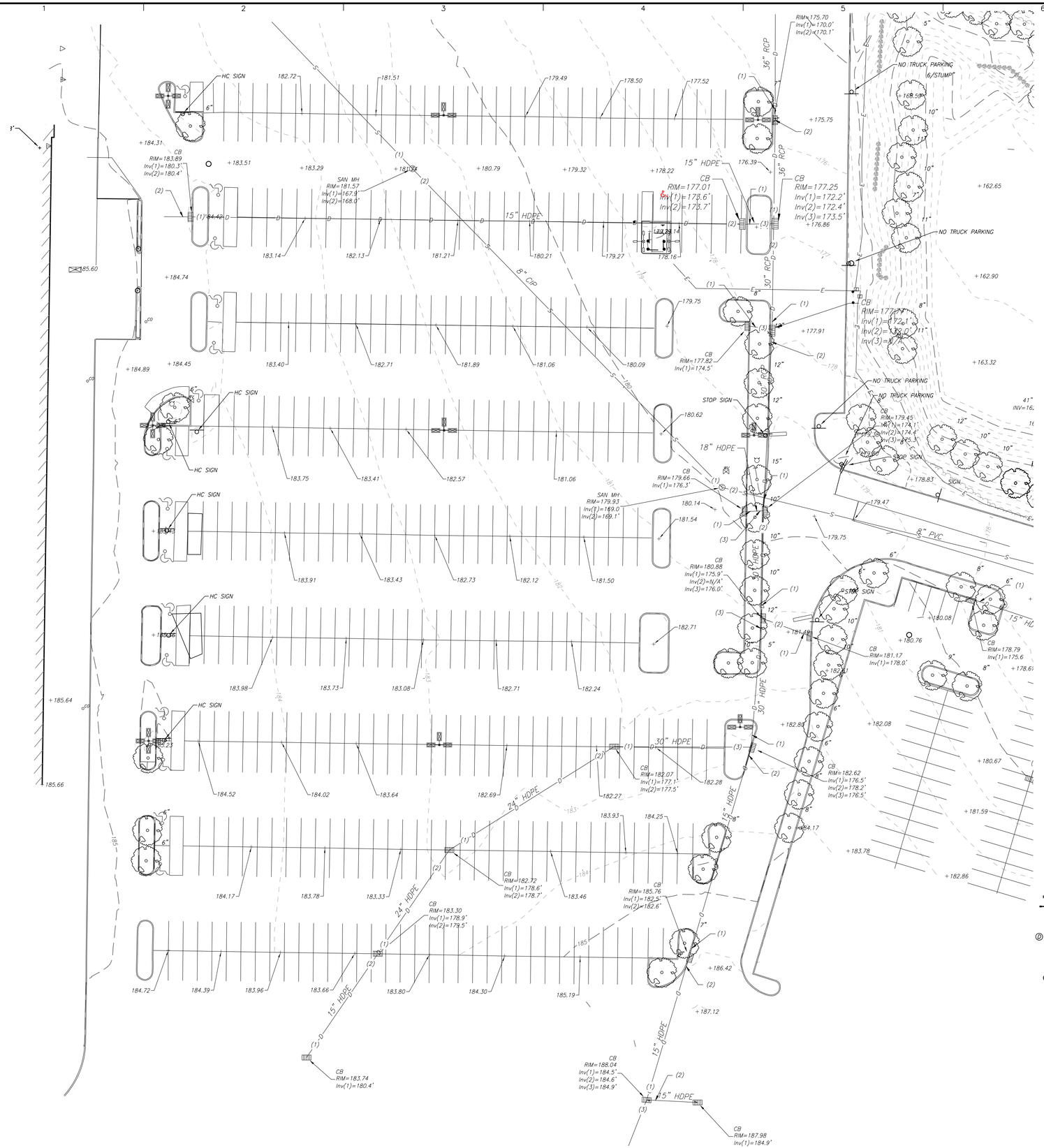

NOTES

1. THIS PLAN WAS PREPARED WITHOUT THE BENEFIT OF A CURRENT TITLE SEARCH. THEREFORE THIS PROPERTY MAY BE SUBJECT TO ADDITIONAL EASEMENTS, RIGHTS-OF-WAY, COVENANTS, ETC. AS MAY BE DISCLOSED IN A CURRENT, COMPREHENSIVE TITLE SEARCH.

2. PARTIAL TOPOGRAPHIC INFORMATION SHOWN BASED ON A FIELD SURVEY PERFORMED BY LANGAN ENGINEERING & ENVIRONMENTAL SERVICES DURING APRIL, 2014

3. MERIDIAN IS REFERENCED AN ASSUMED COORDINATE SYSTEM.

4. VERTICAL DATUM IS ASSUMED.

5. OFFSETS (IF SHOWN) ARE FOR SURVEY REFERENCES ONLY AND ARE NOT TO BE USED FOR CONSTRUCTION OF ANY TYPE.

6. WETLANDS, ENVIRONMENTAL AND/OR HAZARDOUS MATERIALS LOCATION, IF ANY, NOT COVERED UNDER THIS CONTRACT.

7. BASED ON FEMA FLOOD INSURANCE RATE MAP(FIRM), COMMUNITY PANEL NO. 42017C0439F, EFFECTIVE DATE MAY 18, 1999. BUCKS COUNTY, PENNSYLVANIA, THE SUBJECT PROPERTY LIES WITHIN ZONE X; AREAS DETERMINED TO BE OUTSIDE THE 500-YEAR FLOODPLAIN.

8. UNLESS SPECIFICALLY NOTED HEREON, STORM AND SANITARY SEWER INFORMATION (INCLUDING PIPE INVERT, PIPE MATERIAL, AND PIPE SIZE) WAS OBSERVED AND MEASURED AT FIELD LOCATED STRUCTURES (MANHOLES/CATCH BASINS, ETC.). CONDITIONS CAN VARY FROM THOSE ENCOUNTERED AT THE TIMES WHEN AND LOCATIONS WHERE DATA IS OBTAINED. DESPITE MEETING THE REQUIRED STANDARD OF CARE THE SURVEYOR CANNOT AND DOES NOT WARRANT THAT PIPE MATERIAL AND/OR PIPE SIZE THROUGHOUT THE PIPE RUN ARE THE SAME AS THOSE OBSERVED AT EACH STRUCTURE, OR THAT THE PIPE RUN IS STRAIGHT BETWEEN THE LOCATED STRUCTURES. ADDITIONAL UTILITY (WATER, GAS, ELECTRIC ETC%%133) DATA MAY BE SHOWN FROM FIELD LOCATED SURFACE MARKINGS (BY OTHERS), EXISTING STRUCTURES, AND/OR FROM EXISTING DRAWINGS, UNLESS SPECIFICALLY NOTED HERE-ON THE SURVEYOR HAS NOT EXCAVATED TO PHYSICALLY LOCATE THE UNDERGROUND UTILITIES. THE SURVEYOR MAKES NO GUARANTEES THAT THE SHOWN UNDERGROUND UTILITIES ARE EITHER IN SERVICE, ABANDONED OR SUITABLE FOR USE, NOR ARE IN THE EXACT LOCATION OR CONFIGURATION INDICATED HEREON. PRIOR TO ANY DESIGN OR CONSTRUCTION THE PROPER UTILITY AGENCIES MUST BE CONTACTED FOR VERIFICATION OF UTILITY TYPE AND FOR FIELD LOCATIONS.

9. THIS PLAN IS NOT VALID UNLESS STAMPED WITH THE SEAL OF THE UNDERSIGNED PROFESSIONAL(S).

LEGEND (NOT SHOWN TO SCALE)

HYDRANT	D—D	STORM DRAIN	
STREET LIGHT	S	SANITARY LINE	
AREA LIGHT	G—G	GAS LINE	
SIGNAL POLE	W—W	WATER LINE	
POLE	E	ELECTRIC LINE	
ANCHOR POLE	T	TELEPHONE LINE	
MANHOLE (TYPE AS LABELED)	COMB	COMBINED SEWER LINE	
WATER VALVE	C	CABLE TV LINE	
GAS VALVE	ST—ST	STEAM LINE	
UNKNOWN VALVE	UNK	UNKNOWN UTILITY LINE	
CATCH BASIN		OVERHEAD WIRE	
SPOT ELEVATION		GUIDE RAIL (TYPE AS NOTED)	
CLEAN OUT	X—X—X	FENCE (TYPE AS NOTED)	
TREE		TREE LINE	
BENCH MARK		PROPERTY/RIGHT-OF-WAY LINE	
SIGN	322	CONTOUR LINE	
BOLLARD	XR	REFERENCED UTILITY LINE (TYPE AS NOTED)- PLOTTED FROM EXISTING MAPPING	
METAL COVER			
ELECTRIC BOX			
DOOR			
DOUBLE DOOR			
GARAGE DOOR			
PARKING METER			

30 0 15 30
SCALE IN FEET

Date	Description	No.
REVISIONS		

SHAUN F. HIGGINS DATE
PROFESSIONAL LAND SURVEYOR
PA Lic. No. SU-051088-E

LANGAN
ENGINEERING & ENVIRONMENTAL SERVICES
30 South 17th Street, Suite 1300
Philadelphia, PA 19103-4005
P: 215.864.0640 F: 215.864.0671
www.langan.com
NEW JERSEY | PENNSYLVANIA | FLORIDA | NEW YORK | VIRGINIA | CALIFORNIA | CONNECTICUT
ABU DHABI | DUBAI | ATHENS | DOHA | ISTANBUL

PARAMOUNT REALTY SERVICES, INC.

Project
MARKETPLACE AT NESHAMINY
BESALEM TOWNSHIP
BUCKS COUNTY PENNSYLVANIA

Drawing Title
PARTIAL TOPOGRAPHIC SURVEY

Project No. 220048101	Drawing No. VT-101
Date 31 OCTOBER 2014	
Scale 1"=30'	
Drawn By ASB	
Submission Date	Sheet 3 of 29

© 2015 Langan Engineering and Environmental Services, Inc.

Filename: \\langan.com\data\PH\data1\220048101\Survey Data - 220048101\C3D\220048101-VT101.dwg. Date: 8/15/2016 Time: 09:49 User: ddonchez Style Table: Langan.stb Layout: ARCHD-SL

ALL EXISTING BITUMINOUS AND CONCRETE PAVEMENT MUST BE REMOVED COMPLETELY THROUGHOUT THE SITE TO PERMIT PROPER GRADING AND FILL PLACEMENT AS WELL AS FACILITATE BUILDING CONSTRUCTION AND UTILITY INSTALLATIONS. THE REUSE OF EXISTING PAVEMENT / SLAB MATERIALS AFTER PROCESSING SHOULD BE IN ACCORDANCE WITH STATE AND LOCAL REGULATIONS AND ENVIRONMENTAL STATUTES AND AT THE DIRECTION OF THE OWNER AND GEOTECHNICAL ENGINEER.

ACT 287 AS AMENDED

IT IS THE CONTRACTOR'S RESPONSIBILITY TO COMPLY WITH THE PENNSYLVANIA ACT 181 OF 2006 AND TO CONTACT THE "ONE CALL SYSTEM" THREE (3) WORKING DAYS (UNLESS OTHERWISE NOTED) PRIOR TO START OF CONSTRUCTION.

PENNSYLVANIA ONE CALL 1-800-242-1776
SERIAL NO. 20101102688

AQUA PENNSYLVANIA INC. 762 W LANCASTER AVE BRYN MAWR, PA. 19010 (610) 562-1402	VERIZON PENNSYLVANIA 900 RACE STREET, 6TH FLOOR PHILADELPHIA, PA 19107 (215) 351-8947
AT&T LOCAL SERVICES 2315 SALEM RD A10 CONYERS, GA. 33013 (770) 929-4584	COMCAST CABLE COMMUNICATIONS INC. 55 INDUSTRIAL DR IVYLAND, PA. 18974 (215) 918-3137
PECO ENERGY COMPANY 400 PARK AVE WARMINSTER, PA 18974 (215) 956-3121	BUCKS COUNTY WATER AND SEWER AUTHORITY 1275 ALMSHOUSE RD WARRINGTON, PA 18976 (800) 222-2068
BENSALEM TOWNSHIP 3800 HULMEVILLE RD BENSALEM, PA 19020 (215) 633-3733	

ALL EXISTING UTILITIES TO BE REMOVED ARE TO BE DISCONNECTED PRIOR TO THE START OF DEMOLITION. FURTHER, IT IS THE RESPONSIBILITY OF THE CONTRACTOR TO COORDINATE WITH ALL UTILITY COMPANIES PRIOR TO DISCONNECTING AND DEMOLITION OF SAID UTILITIES.

THE INTENT OF THIS PLAN IS TO IDENTIFY THE LIMITS OF DEMOLITION. HOWEVER, THE REMOVAL AND DEMOLITION SHALL BE PERFORMED IN ACCORDANCE WITH BENSALEM TOWNSHIP AND OTHER APPLICABLE REGULATIONS AS WELL AS THE EROSION CONTROL PLANS, SPECIFICALLY THE CONSTRUCTION STAGING.

UTILITY SERVICES FOR THE EXISTING SHOPPING CENTER AND IT'S TENANTS SHALL REMAIN OPERATIONAL DURING UTILITY DEMOLITION.

DUE TO UNKNOWN FIELD CONDITIONS, THIS PLAN SHOULD NOT BE CONSIDERED ALL INCLUSIVE AS ADDITIONAL ITEMS MAY BE FOUND THAT SHALL BE DEMOLISHED.

THE CONTRACTOR IS RESPONSIBLE FOR THE COSTS AND INSTALLATION OF DEMOLITION / CONSTRUCTION FENCE. THE LIMITS OF FENCE ON THIS PLAN ARE SHOWN FOR GRAPHICAL PURPOSES ONLY. THE CONTRACTOR IS RESPONSIBLE FOR ACTUAL LIMITS AND AMOUNT OF FENCE REQUIRED IN ADDITION TO THE SECURITY OF THE WORK AREA

IN AREAS OF EXCAVATION, ALL EXISTING UTILITIES TO REMAIN SHALL BE CHECKED FOR PROPER COVER BY THE CONTRACTOR AS REQUIRED BY THE UTILITY OWNER. SHOULD MINIMUM COVER NOT EXIST, THE CONTRACTOR SHALL BE RESPONSIBLE TO COORDINATE WITH SAID UTILITY COMPANY TO LOWER THE UTILITY TO PROVIDE PROPER COVER.

ALL STRUCTURES SHOWN WITH AN "X" AND AS FUTHER LABELED ON THE PLAN SHALL BE REMOVED. ALL OTHER STRUCTURES, FEATURES ARE TO REMAIN UNLESS OTHERWISE NOTED.

EXISTING UTILITIES THAT ARE TO REMAIN IN AREAS OF REGRADING OR OTHER IMPROVEMENTS SHOULD BE ADJUSTED TO BE FLUSH WITH PROPOSED SURFACE EITHER WITHIN PAVEMENT OR LAWN AREA

GENERAL SITE NOTES:

1. THE CONTRACTOR SHALL FURNISH, INSTALL, TEST AND COMPLETE ALL WORK TO THE SATISFACTION OF THE ENGINEER AND OWNER IN ACCORDANCE WITH THE CONTRACT DOCUMENTS. THE CONTRACTOR IS SOLELY RESPONSIBLE FOR MEANS AND METHODS OF CONSTRUCTION; AS SUCH, THESE PLANS DO NOT COMPLETELY REPRESENT, NOR ARE THEY INTENDED TO REPRESENT, ALL SPECIFIC INSTRUCTIONS REQUIRED FOR SITEWORK CONSTRUCTION. THE CONTRACTOR IS RESPONSIBLE TO CONSTRUCT ALL IMPROVEMENTS DEPICTED ON THESE PLANS IN ACCORDANCE WITH ALL APPLICABLE RULES, REGULATIONS AND LAWS IN EFFECT AT THE TIME OF CONSTRUCTION.
2. THE CONTRACTOR SHALL ACCEPT THE SITE AS IS. THE CONTRACTOR SHALL ASSESS CONDITIONS, AND THE KIND, QUALITY AND QUANTITY OF WORK REQUIRED. THE OWNER AND ENGINEER MAKE NO GUARANTEE IN REGARD TO THE ACCURACY OF ANY INFORMATION THAT WAS OBTAINED DURING INVESTIGATIONS. THE CONTRACTOR SHALL: MAKE A THOROUGH SITE INSPECTION IN ORDER TO FIELD CHECK EXISTING SITE CONDITIONS; CORRELATE CONDITIONS WITH THE DRAWINGS; AND, RESOLVE ANY POSSIBLE CONSTRUCTION CONFLICTS WITH THE OWNER AND ENGINEER PRIOR TO COMMENCEMENT OF WORK. THE CONTRACTOR SHALL PERFORM ADDITIONAL TOPOGRAPHIC SURVEYS HE/SHE DEEMS NECESSARY, PROVIDED THEY ARE COORDINATED WITH THE OWNER. ANY CONDITIONS DETERMINED BY THE CONTRACTOR THAT DIFFER FROM THE INFORMATION SHOWN ON THE DRAWINGS THAT ARE NOT BROUGHT TO THE ATTENTION OF THE OWNER AND ENGINEER PRIOR TO THE START OF WORK SHALL NOT BE CONSIDERED GROUNDS FOR ADDITIONAL PAYMENT OR CHANGES TO THE CONTRACT DURATION, OR ANY OTHER CLAIMS AGAINST THE OWNER OR OWNER'S ENGINEER.
3. THE CONTRACTOR SHALL, WHEN HE/SHE DEEMS NECESSARY, PROVIDE A WRITTEN REQUEST FOR INFORMATION (RFI) TO THE OWNER AND/OR OWNER'S DESIGNATED REPRESENTATIVE, AND ENGINEER PRIOR TO THE CONSTRUCTION OF ANY SPECIFIC SITEWORK ITEM. THE (RFI) SHALL BE IN A FORM ACCEPTABLE TO OWNER AND/OR OWNER'S DESIGNATED REPRESENTATIVE, AND ENGINEER AND SHALL ALLOW FOR A MINIMUM OF THREE WORK DAYS FOR A WRITTEN REPLY. RFIS SHALL BE NUMBERED CONSECUTIVELY BY DATE SUBMITTED. THE CONTRACTOR SHALL BE SOLELY RESPONSIBLE FOR SITEWORK ITEMS CONSTRUCTED DIFFERENTLY THAN INTENDED OR AS DEPICTED ON THE PLANS.
4. INFORMATION RELATED TO ELEVATIONS AND PROPOSED UTILITIES (SUCH AS ROADWAY GRADES, INVERT ELEVATIONS, RIM ELEVATIONS, GRATE ELEVATIONS, BUILDING FINISHED FLOOR ELEVATIONS, ETC.) MAY BE FOUND IN MORE THAN ONE LOCATION IN THE CONTRACT DOCUMENTS. THE CONTRACTOR SHALL SUFFICIENTLY REVIEW ALL PLANS, PROFILES AND ANY OTHER INFORMATION IN THE CONTRACT DOCUMENTS FOR CONSISTENCY PRIOR TO BID. ANY INCONSISTENCIES OR DISCREPANCIES THAT ARE FOUND BY THE CONTRACTOR OR HIS ASSIGNS SHALL BE IMMEDIATELY BROUGHT TO THE ATTENTION OF THE OWNER AND ENGINEER IN WRITING, IN THE FORMAT OF AN RFI PRIOR TO BID.
5. THERE ARE ADDITIONAL NOTES, SPECIFICATIONS AND REQUIREMENTS CONTAINED THROUGHOUT THE PLAN SET AS WELL AS REFERENCES TO SPECIFICATIONS FROM APPLICABLE GOVERNING AUTHORITIES AND INDUSTRY STANDARDS. IT IS THE CONTRACTOR'S RESPONSIBILITY TO OBTAIN, REVIEW AND ADHERE TO ALL THESE DOCUMENTS.
6. CONTRACTOR IS SPECIFICALLY CAUTIONED THAT ALL CONSTRUCTION STAKEOUT FOR THIS PROJECT MUST BE COMPLETED FROM THE SITE SPECIFIC SURVEY CONTROL (HORIZONTAL AND VERTICAL) UPON WHICH THE DESIGN IS BASED. THE CONTRACTOR SHOULD NOT RELY ON OR RE-ESTABLISH SURVEY CONTROL BY GPS OR OTHER METHODS FOR USE IN CONSTRUCTION STAKEOUT OR ANY OTHER PURPOSE FOR THIS PROJECT. ANY DISCREPANCIES BETWEEN THE EXISTING HORIZONTAL OR VERTICAL DATA SHOWN ON THESE DRAWINGS AND THAT ENCOUNTERED IN THE FIELD MUST BE REPORTED TO THE DESIGN TEAM PRIOR TO CONSTRUCTION FOR RESOLUTION.

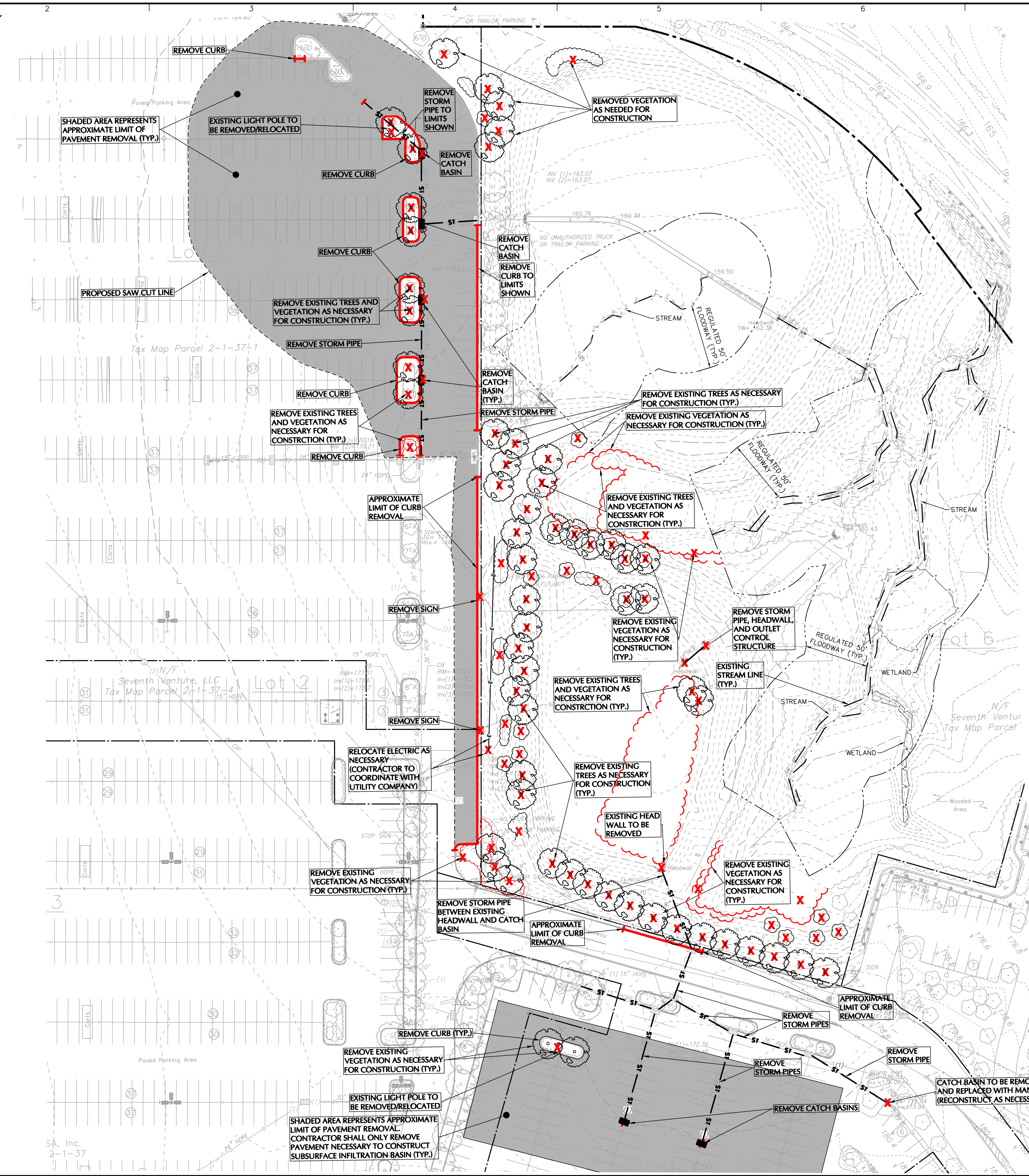

SITE DEMOLITION NOTES

1. THIS PLAN IS PROVIDED FOR ILLUSTRATIVE PURPOSES ONLY TO IDENTIFY THE LIMITS OF DEMOLITION AND SHALL NOT BE CONSIDERED ALL INCLUSIVE. ADDITIONAL ITEMS MAY BE FOUND THAT SHALL BE DEMOLISHED. CONTRACTOR IS RESPONSIBLE FOR VERIFYING ACTUAL LIMITS & EXTENTS OF DEMOLITION.
2. THE CONTRACTOR SHALL REVIEW AND COMPLY WITH ALL PROVISIONS OF BENSALEM TOWNSHIP, AND OTHER JURISDICTIONAL AGENCIES. DEMOLITION AND REMOVAL SHALL BE PERFORMED IN ACCORDANCE WITH SAID REGULATIONS AS WELL AS THE EROSION CONTROL PLANS, SPECIFICALLY THE CONSTRUCTION STAGING.
3. THE CONTRACTOR IS TO PROVIDE EROSION AND SEDIMENTATION CONTROL MEASURES PER APPROVED PLAN PRIOR TO THE START OF EARTH DISTURBING ACTIVITIES.
4. THE CONTRACTOR SHALL BE RESPONSIBLE FOR OBTAINING ALL NECESSARY CONSTRUCTION PERMITS INCLUDING, BUT NOT LIMITED TO, SIDEWALK/STREET CLOSING, DEMOLITION, DISPOSAL AND ASBESTOS ABATEMENT.
5. CONTRACTOR SHALL MAINTAIN ALL EXISTING PARKING, SIDEWALKS, DRIVES, ETC. CLEAR AND FREE FROM ANY CONSTRUCTION ACTIVITY AND/OR MATERIAL TO ENSURE EASY AND SAFE PEDESTRIAN AND VEHICULAR TRAFFIC TO AND FROM THE SITE. CONTRACTOR MUST PROTECT THE PUBLIC AT ALL TIMES WITH FENCING, BARRICADES, ENCLOSURES, ETC. TO THE BEST PRACTICES. CONTRACTOR MUST COORDINATE WITH OWNER PRIOR TO ANY CONSTRUCTION TO ESTABLISH CUSTOMER ACCESS AND TRAFFIC FLOW DURING ALL PHASES OF WORK. CONTINUOUS ACCESS SHALL BE MAINTAINED FOR THE SURROUNDING PROPERTIES AT ALL TIMES DURING DEMOLITION OF THE EXISTING FACILITIES. CONTRACTOR SHALL COORDINATE/PHASE ALL CONSTRUCTION ACTIVITY AND UTILITY INTERRUPTIONS WITH THE OWNER TO MINIMIZE DISTURBANCE AND INCONVENIENCE TO EXISTING SHOPPING CENTER OPERATION AND THE CUSTOMERS.
6. THE CONTRACTOR SHALL MAINTAIN AND PROTECT ALL OFFSITE PROPERTY AND STRUCTURES FROM ANY AND ALL DAMAGE DURING THE DEMOLITION OPERATION. THE CONTRACTOR SHALL USE ANY NECESSARY PROTECTION SCREENS, PLATFORMS, BRACING, UNDERPINNING, ETC. TO PROTECT OFFSITE PROPERTY. ANY DAMAGE CAUSED BY THE CONTRACTOR OR HIS AGENTS SHALL BE IMMEDIATELY REPAIRED BY THE CONTRACTOR AT NO ADDITIONAL COST TO THE OWNER.
7. THE CONTRACTOR IS RESPONSIBLE FOR THE COSTS AND INSTALLATION OF DEMOLITION CONSTRUCTION FENCE. THE LIMITS OF FENCE ON THIS PLAN ARE SHOWN FOR GRAPHICAL PURPOSES ONLY. THE CONTRACTOR IS RESPONSIBLE FOR ACTUAL LIMITS AND AMOUNT OF FENCE (WITH APPROVAL BY THE OWNER) REQUIRED IN ADDITION TO THE SECURITY OF THE WORK AREA.
8. THE LOCATION OF ALL EXISTING UTILITIES SHOWN ON THIS PLAN HAVE BEEN DETERMINED FROM THE BEST INFORMATION AVAILABLE AND ARE GIVEN FOR THE CONVENIENCE OF THE CONTRACTOR. THE CONTRACTOR IS SPECIFICALLY CAUTIONED THAT THE LOCATION AND/OR ELEVATION OF EXISTING UTILITIES AS SHOWN ON THESE PLANS IS BASED ON RECORDS OF THE VARIOUS UTILITY COMPANIES, AND WHERE POSSIBLE MEASUREMENTS TAKEN IN THE FIELD. THE INFORMATION IS NOT TO BE RELIED UPON AS BEING EXACT OR COMPLETE. THE CONTRACTOR MUST CALL THE APPROPRIATE UTILITY COMPANY AT LEAST 72 HOURS BEFORE ANY EXCAVATION TO REQUEST EXACT FIELD LOCATION OF UTILITIES. IT SHALL BE THE RESPONSIBILITY OF THE CONTRACTOR TO RELOCATE ALL UTILITIES WHICH CONFLICT WITH THE PROPOSED IMPROVEMENTS SHOWN ON THE PLANS.
9. THE CONTRACTOR SHALL INSPECT THE SITE THOROUGHLY AND FIELD VERIFY THE LOCATION AND DEPTH OF ALL UTILITIES AND LATERALS. UNDERGROUND ELECTRIC, TELEPHONE, VAULTS, GAS, WATER MAINS, ETC. ARE APPROXIMATE AND MUST BE FIELD VERIFIED. UTILITY INFORMATION HAS BEEN COMPILED FROM FIELD SURVEYS PERFORMED BY LANGAN ENGINEERING AND ENVIRONMENTAL SERVICES AND FROM UTILITY COMPANY RECORD PLANS. OTHER UTILITIES MAY ALSO EXIST. ALL CONTRACTORS USING THESE PLANS FOR DEMOLITION SHALL CONFIRM ALL UTILITIES IN THE FIELD FOR EXACT LOCATIONS, SIZES, MATERIALS, AND ELEVATIONS.
10. ALL EXISTING SEWERS, PIPING AND UTILITIES SHOWN ARE NOT TO BE INTERPRETED AS THE EXACT LOCATION, OR AS THE ONLY OBSTACLES THAT MAY OCCUR ON THE SITE. VERIFY EXISTING CONDITIONS AND PROCEED WITH CAUTION AROUND ANY ANTICIPATED FEATURES. GIVE NOTICE TO ALL UTILITY COMPANIES REGARDING DESTRUCTION AND REMOVAL OF ALL SERVICE LINES AND CAP ALL LINES BEFORE PROCEEDING WITH THE WORK. UTILITIES DETERMINED TO BE ABANDONED AND LEFT IN PLACE SHALL BE GROUTED IF UNDER BUILDING.
11. ELECTRICAL, TELEPHONE, CABLE, WATER, FIBER OPTIC CABLE AND/OR GAS LINES NEEDING TO BE REMOVED OR RELOCATED SHALL BE COORDINATED WITH THE AFFECTED UTILITY COMPANY. ADEQUATE TIME SHALL BE PROVIDED FOR RELOCATION AND CLOSE COORDINATION WITH THE UTILITY COMPANY IS NECESSARY TO PROVIDE A SMOOTH TRANSITION IN UTILITY SERVICE. CONTRACTOR SHALL PAY CLOSE ATTENTION TO EXISTING UTILITIES WITHIN THE ROAD RIGHT-OF-WAY DURING CONSTRUCTION.
12. THE CONTRACTOR SHALL COORDINATE WITH RESPECTIVE UTILITY COMPANIES PRIOR TO THE REMOVAL AND/OR RELOCATION OF UTILITIES. THE CONTRACTOR SHALL COORDINATE WITH THE UTILITY COMPANY CONCERNING PORTIONS OF WORK WHICH MAY BE PERFORMED BY THE UTILITY COMPANY'S FORCES AND ANY FEES WHICH ARE TO BE PAID TO THE UTILITY COMPANY FOR THEIR SERVICES. THE CONTRACTOR IS RESPONSIBLE FOR PAYING ALL FEES AND CHARGES.
13. ALL EXISTING UTILITIES TO BE REMOVED ARE TO BE DISCONNECTED PRIOR TO THE START OF DEMOLITION. FURTHER, IT IS THE RESPONSIBILITY OF THE CONTRACTOR TO COORDINATE WITH ALL UTILITY COMPANIES PRIOR TO DISCONNECTING AND DEMOLITION OF SAID UTILITIES.
14. THE CONTRACTOR SHALL COORDINATE WATERMAIN WORK WITH THE FIRE DEPARTMENT AND THE UTILITY DEPARTMENT TO PLAN PROPOSED IMPROVEMENTS AND TO ENSURE ADEQUATE FIRE PROTECTION IS CONSTANTLY AVAILABLE TO THE SHOPPING CENTER AND SITE THROUGH OUT THIS SPECIFIC WORK AND THROUGH ALL PHASES OF CONSTRUCTION. CONTRACTOR WILL BE RESPONSIBLE FOR ARRANGING/PROVIDING ANY REQUIRED WATERMAIN SHUT OFFS DURING CONSTRUCTION. ANY COSTS ASSOCIATED WITH WATERMAIN SHUT OFFS WILL BE THE RESPONSIBILITY OF THE CONTRACTOR AND NO EXTRA COMPENSATION WILL BE PROVIDED.
15. DEMOLITION CONTRACTOR SHALL COORDINATE DECOMMISSIONING AND REMOVAL OF UTILITY LINES WITH UTILITY CONTRACTOR AS TO LOCATION AND CONDITION OF CAPPING. THE ACCESS SHALL REMAIN OPEN AND OPERATIONAL AT ALL TIMES.
16. THE CONTRACTOR SHALL MAINTAIN UNINTERRUPTED UTILITY SERVICE TO THE SURROUNDING PROPERTIES AND EXISTING SHOPPING CENTER TENANTS AT ALL TIMES.
17. ALL EXISTING UNDERGROUND UTILITIES THAT WILL NOT BE MAINTAINED IN SERVICE SHOULD EITHER BE REMOVED AND REPLACED WITH APPROVED COMPACTED FILL, OR BE ABANDONED IN PLACE BY FILLING WITH GROUT AND CAPPING, PROVIDED THAT THEY DO NOT INTERFERE WITH ANY OF THE PROPOSED CONSTRUCTION.
18. ALL EXISTING BITUMINOUS AND CONCRETE PAVEMENT MUST BE REMOVED COMPLETELY THROUGHOUT THE PROJECT AREA TO PERMIT PROPER GRADING AND FILL PLACEMENT AS WELL AS FACILITATE BUILDING CONSTRUCTION AND UTILITY INSTALLATIONS. THE REUSE OF EXISTING PAVEMENT/SLAB MATERIALS AFTER PROCESSING SHOULD BE IN ACCORDANCE WITH STATE AND LOCAL REGULATIONS AND ENVIRONMENTAL STATUTES AND AT THE DIRECTION OF THE OWNER AND GEOTECHNICAL ENGINEER.
19. CONTRACTOR MAY LIMIT SAW-CUT & PAVEMENT REMOVAL TO ONLY THOSE AREAS WHERE IT IS REQUIRED AS SHOWN ON THESE CONSTRUCTION PLANS BUT IF ANY DAMAGE IS INCURRED ON ANY OF THE SURROUNDING PAVEMENT, ETC. THE CONTRACTOR SHALL BE RESPONSIBLE FOR IT'S REMOVAL AND REPAIR.
20. AS THIS PLAN IS NOT ALL INCLUSIVE, THE CONTRACTOR IS TO DEMOLISH ALL BUILDINGS, FLOOR SLABS, UTILITIES, ETC. THAT ARE WITHIN 4 FEET OF PROPOSED GRADE AND WITHIN 10 FEET OF CENTERLINE OF PROPOSED UTILITIES.
21. ALL EXISTING FOUNDATIONS AND ALL SUPPORTING UTILITIES WITHIN THE PROPOSED BUILDING FOOTPRINTS AND WITHIN A 10' WIDE ZONE BEYOND THE FOOTPRINT LIMITS MUST BE REMOVED AND REPLACED WITH APPROVED STRUCTURAL FILL COMPACTED PER SPECIFICATION.
22. ALL FACILITIES TO BE REMOVED SHALL BE UNDERCUT TO SUITABLE MATERIAL AND BROUGHT TO GRADE WITH SUITABLE COMPACTED FILL MATERIAL PER THE SPECIFICATIONS.
23. ALL EXISTING STRUCTURES, FENCING, TREES, ETC. WITHIN CONSTRUCTION AREA SHALL BE REMOVED SUCH THAT THE IMPROVEMENTS SHOWN ON THE REMAINING PLANS CAN BE CONSTRUCTED. THE CONTRACTOR SHALL REMOVE FROM THE SITE ALL DEBRIS, RUBBISH AND OTHER MATERIALS RESULTING FROM DEMOLITION AND SHALL SAFELY AND LEGALLY DISPOSE OF ALL THESE ITEMS IN ACCORDANCE WITH APPLICABLE FEDERAL, STATE AND REGULATORY AUTHORITY HAVING JURISDICTION. ALL RECYCLING MUST BE DONE IN ACCORDANCE WITH APPLICABLE REGULATIONS. BURNING OF ANY DEMOLISHED MATERIALS ON-SITE SHALL NOT BE PERMITTED. ANY RECYCLING OF DEMOLITION DEBRIS SHALL BE APPROVED BY THE OWNER.
24. THE CONTRACTOR SHALL PREPARE AND IMPLEMENT A WASTE MANAGEMENT PLAN IN ACCORDANCE WITH THE PENNSYLVANIA DEP, FEDERAL & LOCAL REGULATIONS IF CONTAMINATED MATERIAL IS ENCOUNTERED DURING DEMOLITION AND/OR CONSTRUCTION.
25. LANDSCAPING TO REMAIN IS TO BE PROTECTED DURING ALL SITE WORK. REFER TO THE LANDSCAPING PLAN.
26. SHOULD REMOVAL AND/OR RELOCATION ACTIVITIES DAMAGE FENCING, LIGHTING AND/OR STORM INLET STRUCTURES, THE CONTRACTOR SHALL PROVIDE NEW MATERIALS / STRUCTURES IN ACCORDANCE WITH THE CONTRACT DOCUMENTS. EXCEPT FOR MATERIALS DESIGNED TO BE RELOCATED ON THIS PLAN, ALL OTHER CONSTRUCTION MATERIALS SHALL BE NEW.
27. DAMAGE TO ALL EXISTING CONDITIONS TO REMAIN WILL BE REPLACED AT CONTRACTOR'S EXPENSE.

ALL EXISTING UNDERGROUND UTILITIES THAT WILL NOT BE MAINTAINED IN SERVICE SHOULD EITHER BE REMOVED AND REPLACED WITH APPROVED COMPACTED FILL, OR BE ABANDONED IN PLACE BY FILLING WITH GROUT AND CAPPING, PROVIDED THAT THEY DO NOT INTERFERE WITH ANY OF THE PROPOSED CONSTRUCTION.

THE CONTRACTOR SHALL REMOVE FROM THE SITE ALL DEBRIS, RUBBISH AND OTHER MATERIALS RESULTING FROM DEMOLITION AND SHALL SAFELY AND LEGALLY DISPOSE OF ALL THESE ITEMS IN ACCORDANCE WITH APPLICABLE FEDERAL, STATE AND REGULATORY AUTHORITY HAVING JURISDICTION. ALL RECYCLING MUST BE DONE IN ACCORDANCE WITH APPLICABLE REGULATIONS. BURNING OF ANY DEMOLISHED MATERIALS ON-SITE SHALL NOT BE PERMITTED. ANY RECYCLING OF DEMOLITION DEBRIS SHALL BE APPROVED BY THE OWNER.

LEGEND

- CONSTRUCTION FENCE
- LIMIT OF DISTURBANCE
- REMOVE STORM
- REMOVE SEWER
- REMOVE WATER
- REMOVE TELEPHONE
- REMOVE ELECTRIC
- REMOVE EXISTING FEATURE
- REMOVE CATCH BASIN
- REMOVE PAVEMENT
- PROPOSED SAWCUT LINE
- REMOVE CURB/CONCRETE BUMPERS
- REMOVE TREE

PENNSYLVANIA ONE CALL SYSTEM, INC. 1-800-242-1776 STOP - CALL BEFORE YOU DIG!

CALL BEFORE YOU DIG IN PA, TOLL FREE 1 - 800 - 242-1776
FOR FREE MARKOUTS TO LOCATE UNDERGROUND UTILITIES
" IT'S THE LAW "

40 0 10 25 40
SCALE IN FEET

Date	Description	No.
8/8/2016	REVISIONS PER TOWNSHIP AND COUNTY COMMENTS	1.

REVISIONS

BRIAN M. CONLON DATE
PROFESSIONAL ENGINEER
PA Lic. No. PE061782

LANGAN
30 South 17th Street, Suite 1300, Philadelphia, PA 19103
T: 215.864.0640 F: 215.864.0671 www.langan.com
NEW JERSEY NEW YORK CONNECTICUT PENNSYLVANIA OHIO
VIRGINIA WASHINGTON DC FLORIDA NORTH DAKOTA CALIFORNIA
ABU DHABI ATHENS DOHA DUBAI ISTANBUL
Langan Engineering, Environmental, Surveying and Landscape Architecture, D.P.C.
Langan Engineering and Environmental Services, Inc.
Langan CT, Inc.
Langan International LLC
Collectively known as Langan

Project
THE MARKETPLACE AT NESHAMINY
BENSALEM TOWNSHIP
BUCKS COUNTY PENNSYLVANIA

Drawing Title
SITE DEMOLITION PLAN

Project No. 220048102	Drawing No.
Date 24 JUNE 2016	CD-101
Scale 1"=40'	
Drawn By TFH	
Checked By	SHEET 4 OF 29

© 2014 Langan

LOCATION MAP

SITE CONSTRUCTION NOTES:

1. SITE ADDRESS:
   US 1 AND ROCKHILL DRIVE
   BENSALEM, PA 19020
2. APPLICANT/OWNER:
   PARAMOUNT REALTY SERVICES, INC.
   1195 ROUTE 70
   BENSALEM TOWNSHIP, PA 19020
3. THE OVERALL MARKETPLACE AT NESHAMINY PROPERTY CONSISTS OF APPROXIMATELY 40.7 ACRES LOCATED IN BENSALEM TOWNSHIP, BUCKS COUNTY.
4. ALL DRAWINGS IN THIS PLAN SET ARE MADE PART OF THIS RECORD PLAN AND ALL INFORMATION SHOWN HEREON SHALL BE CONSIDERED APPLICABLE FOR THE COMPLETION OF THIS PROJECT. INDIVIDUAL PLANS SHALL NOT BE USED SINCE THEY CONSTITUTE ONLY A PART OF THE COMPLETE SET OF PLANS FOR THIS PROJECT.
5. THIS APPLICATION PROPOSES THE CONSTRUCTION OF A 16,862 SQUARE FOOT RETAIL/RESTAURANT BUILDING AND A 10,691 SF RETAIL BUILDING ALONG WITH THE SUPPORTING INFRASTRUCTURE INCLUDING PARKING, DRIVE AISLES, LIGHTING, LANDSCAPING AND UTILITIES, INCLUDING BUT NOT LIMITED TO WATER, SANITARY SEWER, TELEPHONE, ELECTRIC, GAS AND STORM DRAINAGE FACILITIES.
6. THIS SITE PLAN IS BASED UPON EXISTING PHYSICAL CONDITIONS AT THE SUBJECT SITE DURING A FIELD SURVEY BY LANGAN ENGINEERING AND ENVIRONMENTAL SERVICES IN APRIL, 2014, AUGUST 2015 AND THE FOLLOWING REFERENCE PLAN:
   A. SHEET VT-101, PARTIAL TOPOGRAPHIC SURVEY, DATED 10/31/14, PREPARED BY LANGAN ENGINEERING AND ENVIRONMENTAL SERVICES.
7. THE CONTRACTOR SHALL BE RESPONSIBLE FOR OBTAINING ALL NECESSARY CONSTRUCTION PERMITS INCLUDING, BUT NOT LIMITED TO, SIDEWALK/STREET CLOSING AND DEMOLITION.
8. ALL TOWNSHIP, COUNTY AND STATE OCCUPANCY PERMITS SHALL BE OBTAINED FOR CONSTRUCTION AND IMPROVEMENTS WITHIN TOWNSHIP, COUNTY AND STATE ROADS.
9. THE CONTRACTOR SHALL REVIEW AND COMPLY WITH ALL APPLICABLE PROVISIONS, STANDARDS AND SPECIFICATIONS, CONSTRUCTION REQUIREMENTS AND MATERIAL SPECIFICATIONS SHALL BE IN ACCORDANCE WITH THE LATEST STANDARDS AND DETAILS OF BENSALEM TOWNSHIP, BUCKS COUNTY, PADEP, PENNDOT, AND OSHA WHERE APPLICABLE.
10. ALL DIMENSIONS SHOWN ON THE PLANS SHALL BE FIELD VERIFIED BY THE CONTRACTOR PRIOR TO CONSTRUCTION. THE CONTRACTOR SHALL NOTIFY THE ENGINEER IN WRITING IF ANY DISCREPANCIES EXIST PRIOR TO PROCEEDING WITH CONSTRUCTION.
11. THE CONTRACTOR SHALL BE RESPONSIBLE FOR ALL RELOCATIONS, INCLUDING BUT NOT LIMITED TO STRUCTURES, UTILITIES, STORM DRAINAGE, SIGNS, TRAFFIC SIGNALS, POLES, ETC. AS REQUIRED. ALL WORK SHALL BE IN ACCORDANCE WITH GOVERNING AUTHORITIES SPECIFICATIONS AND SHALL BE APPROVED BY SUCH. ALL COSTS SHALL BE INCLUDED IN BASE BID.
12. THE CONTRACTOR SHALL BE RESPONSIBLE FOR REPAIRING THE DAMAGE DONE TO ANY EXISTING ITEM DURING CONSTRUCTION, INCLUDING BUT NOT LIMITED TO STRUCTURES, UTILITIES, STORM DRAINAGE, PAVEMENT, STRIPING, CURB, ETC. REPAIRS SHALL BE EQUAL TO OR BETTER THAN EXISTING CONDITIONS. THE CONTRACTOR IS RESPONSIBLE TO DOCUMENT ALL EXISTING DAMAGE AND NOTIFY THE CONSTRUCTION MANAGER PRIOR TO CONSTRUCTION START.
13. THE CONTRACTOR SHALL FOLLOW ALL LOCAL, STATE AND FEDERAL REGULATIONS IN DISPOSING OF DEMOLISHED MATERIALS REMOVED FROM THE SITE.
14. THE CONTRACTOR SHALL REFER TO ARCHITECTURAL PLANS FOR EXACT LOCATIONS AND DIMENSIONS OF CANOPIES, EXIT DOORS, RAMPS, TRUCK DOCKS, PRECISE BUILDING DIMENSIONS, CONCRETE PADS AND EXACT BUILDING UTILITY ENTRANCE LOCATIONS.
15. ALL DISTURBED AREAS ARE TO RECEIVE SIX INCHES OF TOPSOIL, SEED, MULCH AND WATER UNTIL A HEALTHY STAND OF GRASS IS ESTABLISHED.
16. ALL PAVEMENT MARKINGS SHALL CONFORM TO THE "MANUAL OF UNIFORM TRAFFIC CONTROL DEVICES" (LATEST EDITION) FROM THE U.S. DEPARTMENT OF TRANSPORTATION.
17. ALL DIMENSIONS AND RADII ARE TO THE FACE OF CURB UNLESS OTHERWISE NOTED.
18. BASED ON FEMA FLOOD INSURANCE RATE MAP (FIRM), COMMUNITY PANEL NO. 42017C0430J, EFFECTIVE DATE MARCH 16, 2015, FOR BUCKS COUNTY, PENNSYLVANIA, THE SUBJECT PROPERTY LIES IN ZONE X, AREAS DETERMINED TO BE OUTSIDE THE 0.2% ANNUAL CHANCE FLOODPLAIN.
19. NATURAL RESOURCES DELINEATION PERFORMED ON 8/10/2015 AND 8/14/2015 BY LANGAN WETLAND SCIENTISTS.

GENERAL SITE NOTES:

1. THE CONTRACTOR SHALL FURNISH, INSTALL, TEST AND COMPLETE ALL WORK TO THE SATISFACTION OF THE ENGINEER AND OWNER IN ACCORDANCE WITH THE CONTRACT DOCUMENTS. THE CONTRACTOR IS SOLELY RESPONSIBLE FOR MEANS AND METHODS OF CONSTRUCTION; AS SUCH, THESE PLANS DO NOT COMPLETELY REPRESENT, NOR ARE THEY INTENDED TO REPRESENT, ALL SPECIFIC INSTRUCTIONS REQUIRED FOR SITEWORK CONSTRUCTION. THE CONTRACTOR IS RESPONSIBLE TO CONSTRUCT ALL IMPROVEMENTS DEPICTED ON THESE PLANS IN ACCORDANCE WITH ALL APPLICABLE RULES, REGULATIONS AND LAWS IN EFFECT AT THE TIME OF CONSTRUCTION.
2. THE CONTRACTOR SHALL ACCEPT THE SITE AS IS. THE CONTRACTOR SHALL ASSESS CONDITIONS, AND THE KIND, QUALITY AND QUANTITY OF WORK REQUIRED. THE OWNER AND ENGINEER MAKE NO GUARANTEE IN REGARD TO THE ACCURACY OF ANY INFORMATION THAT WAS OBTAINED DURING INVESTIGATIONS. THE CONTRACTOR SHALL MAKE A THOROUGH SITE INSPECTION IN ORDER TO FIELD CHECK EXISTING SITE CONDITIONS; CORRELATE CONDITIONS WITH THE DRAWINGS; AND, RESOLVE ANY POSSIBLE CONSTRUCTION CONFLICTS WITH THE OWNER AND ENGINEER PRIOR TO COMMENCEMENT OF WORK. THE CONTRACTOR SHALL PERFORM ADDITIONAL TOPOGRAPHIC SURVEYS HE/SHE DEEMS NECESSARY, PROVIDED THEY ARE COORDINATED WITH THE OWNER. ANY CONDITIONS DETERMINED BY THE CONTRACTOR THAT DIFFER FROM THE INFORMATION SHOWN ON THE DRAWINGS THAT ARE NOT BROUGHT TO THE ATTENTION OF THE OWNER AND ENGINEER PRIOR TO THE START OF WORK SHALL NOT BE CONSIDERED GROUNDS FOR ADDITIONAL PAYMENT OR CHANGES TO THE CONTRACT DURATION, OR ANY OTHER CLAIMS AGAINST THE OWNER OR OWNER'S ENGINEER.
3. THE CONTRACTOR SHALL, WHEN HE/SHE DEEMS NECESSARY, PROVIDE A WRITTEN REQUEST FOR INFORMATION (RFI) TO THE OWNER AND/OR OWNER'S DESIGNATED REPRESENTATIVE PRIOR TO THE CONSTRUCTION OF ANY SPECIFIC SITEWORK ITEM. THE (RFI) SHALL BE IN A FORM ACCEPTABLE TO OWNER AND/OR OWNER'S DESIGNATED REPRESENTATIVE, AND ENGINEER AND SHALL ALLOW FOR A MINIMUM OF THREE WORK DAYS FOR A WRITTEN REPLY. RFIS SHALL BE NUMBERED CONSECUTIVELY BY DATE SUBMITTED. THE CONTRACTOR SHALL BE SOLELY RESPONSIBLE FOR SITEWORK ITEMS CONSTRUCTED DIFFERENTLY THAN INTENDED OR AS DEPICTED ON THE PLANS.
4. INFORMATION RELATED TO ELEVATIONS AND PROPOSED UTILITIES (SUCH AS ROADWAY GRADES, INVERT ELEVATIONS, RIM ELEVATIONS, GRATE ELEVATIONS, BUILDING FINISHED FLOOR ELEVATIONS, ETC.) MAY BE FOUND IN MORE THAN ONE LOCATION IN THE CONTRACT DOCUMENTS. THE CONTRACTOR SHALL SUFFICIENTLY REVIEW ALL PLANS, PROFILES AND ANY OTHER INFORMATION IN THE CONTRACT DOCUMENTS FOR CONSISTENCY PRIOR TO BID. ANY INCONSISTENCIES OR DISCREPANCIES THAT ARE FOUND BY THE CONTRACTOR OR HIS ASSIGNS SHALL BE IMMEDIATELY BROUGHT TO THE ATTENTION OF THE OWNER AND ENGINEER IN WRITING, IN THE FORMAT OF AN RFI PRIOR TO BID.
5. THERE ARE ADDITIONAL NOTES, SPECIFICATIONS AND REQUIREMENTS CONTAINED THROUGHOUT THE PLAN SET AS WELL AS REFERENCES TO SPECIFICATIONS FROM APPLICABLE GOVERNING AUTHORITIES AND INDUSTRY STANDARDS. IT IS THE CONTRACTOR'S RESPONSIBILITY TO OBTAIN, REVIEW AND ADHERE TO ALL THESE DOCUMENTS.
6. CONTRACTOR IS SPECIFICALLY CAUTIONED THAT ALL CONSTRUCTION STAKEOUT FOR THIS PROJECT MUST BE COMPLETED FROM THE SITE SPECIFIC SURVEY CONTROL (HORIZONTAL AND VERTICAL) UPON WHICH THE DESIGN IS BASED. THE CONTRACTOR SHOULD NOT RELY ON OR RE-ESTABLISH SURVEY CONTROL BY GPS OR OTHER METHODS FOR USE IN CONSTRUCTION STAKEOUT OR ANY OTHER PURPOSE FOR THIS PROJECT. ANY DISCREPANCIES BETWEEN THE EXISTING HORIZONTAL OR VERTICAL DATA SHOWN ON THESE DRAWINGS AND THAT ENCOUNTERED IN THE FIELD MUST BE REPORTED TO THE DESIGN TEAM PRIOR TO CONSTRUCTION FOR RESOLUTION.

REFER TO ARCHITECTURAL PLAN SETS FOR ALL BUILDING INFORMATION, INCLUDING ELEVATIONS, FLOOR PLANS, UTILITY CONNECTIONS AND SIGNAGE INFORMATION

REFER TO PAVEMENT AND VEHICLE CIRCULATION PLAN, DRAWING CS-301, FOR LIMITS OF STANDARD AND HEAVY DUTY PAVING AND TRUCK ROUTES.

REFER TO DETAIL SHEET CS-501 FOR SITE IMPROVEMENT DETAILS

REFER TO DRAWING CS-101 FOR DETAILED SITE PLAN INFORMATION

ALL SIGNS SHALL CONFORM TO THE MANUAL ON UNIFORM TRAFFIC CONTROL DEVICES (MUTCD).

BENSALEM TOWNSHIP, BUCKS COUNTY, PENNSYLVANIA
H-C1-HIGHWAY COMMERCIAL DISTRICT
ZONING SUMMARY

APPLICABLE REGULATIONS	PERMITTED/REQUIRED	EXISTING	PROPOSED
ZONING DISTRICT DESIGNATION: HIGHWAY COMMERCIAL DISTRICT (H-C1)			
SCHEDULE OF USE REGULATIONS			
PERMITTED USE:	MAJOR SHOPPING CENTER	MAJOR SHOPPING CENTER	MAJOR SHOPPING CENTER (A)
AREA AND HEIGHT REGULATIONS			
MINIMUM LOT AREA:	15,000 SQUARE FEET	1,771,150 SQUARE FEET (40.66 ACRES)	1,771,150 SQUARE FEET (40.66 ACRES) (B)
MINIMUM LOT WIDTH:	75 FEET	>75 FEET	>75 FEET
MAXIMUM BUILDING COVERAGE:	35%	18.57% (329,040 SQUARE FEET)	20.13% (356,593 SQUARE FEET)
MAXIMUM IMPERVIOUS COVERAGE:	75% (1,328,362 SQUARE FEET)	60.16% (1,065,451 SQUARE FEET)	63.59% (1,126,251 SQUARE FEET)
MINIMUM FRONT YARD:	50 FEET	50 FEET	50 FEET
MINIMUM SIDE YARD:	10 FEET	N/A	N/A
MINIMUM REAR YARD:	25 FEET	N/A	N/A
MAXIMUM BUILDING HEIGHT:	55 FEET	35 FEET	35 FEET
PARKING REQUIREMENTS			
MAJOR SHOPPING CENTER:	5 SPACES PER 1,000 SQUARE OF GLA FOR A MAJOR SHOPPING CENTER REQUIRED EXISTING: 1,652 SPACES (329,040 SQUARE FEET) REQUIRED PROPOSED: 1,783 SPACES (356,593 SQUARE FEET)	1,919 SPACES (5.83 SPACES/ 1,000 SF)	1,894 SPACES (5.31 SPACES/ 1,000 SF)
MINIMUM NUMBER OF HANDICAP SPACES:	REQUIRED EXISTING: 29 SPACES REQUIRED PROPOSED: 28 SPACES	48	54
MINIMUM PARKING SPACE SIZE (90°)	9 FEET x 18 FEET	9 FEET x 18 FEET	9 FEET x 18 FEET
MINIMUM ONE-WAY DRIVE AISLE WIDTH (90°)	18 FEET	N/A	18 FEET
MINIMUM TWO-WAY DRIVE AISLE WIDTH (90°)	24 FEET	24 FEET	24 FEET
MINIMUM RESIDENTIAL BUFFER STRIP	20 FEET	20 FEET	20 FEET
MINIMUM YARD ADJACENT TO RESIDENTIAL USE	75' FROM REAR BUFFER STRIP	30 FEET (AT LA FITNESS)	30 FEET (AT LA FITNESS) (C)
MINIMUM WETLANDS BUFFER	50 FEET	> 50 FEET	> 50 FEET

NOTES:

(A) PER SECTION 232-408(15)(B), IN A MAJOR SHOPPING CENTER, THE INDIVIDUAL LOTS OR PARCELS WHICH ARE CREATED FOR THE PURPOSE OF ESTABLISHING SEPARATE OWNERSHIP SHALL NOT BE REQUIRED TO COMPLY WITH SECTION 232-409 LOT AREA, LOT WIDTH, BUILDING AREA AND YARD REQUIREMENTS PROVIDED THAT THE FOLLOWING CONDITIONS ARE MET:

1. THE OVERALL TRACT, LOT OR PARCEL BEING DEVELOPED AS A MAJOR SHOPPING CENTER COMPLIES WITH THE LOT AREA, LOT WIDTH, BUILDING AREA, AND YARD REQUIREMENTS OF SECTION 232-409
2. A CROSS EASEMENT AGREEMENT IS RECORDED WITH THE FINAL PLAN PROVIDING FOR RECIPROCAL RIGHTS FOR THE INDICUAL LOTS OR PARCELS RELATING TO INGRESS AND EGRESS, UTILITIES, STORMWATER MANAGEMENT, MAINTENANCE OF COMMON AREAS AND, UNLESS THE PARKING REQUIREMENTS FOR THE INDIVIDUAL LOT OR PARCEL ARE MET ON THAT LOT OR PARCEL, AND PARKING ON THAT LOT OR PARCEL IS NOT REQUIRED BY ANY OTHER LOT OR PARCEL TO MEET THE REQUIREMENTS OF THIS SECTION, THE COMMON USE OF PARKING AREAS.
3. EACH INDIVIDUAL LOT OR PARCEL CONTAINS A MINIMUM OF .75 ACRES OR ONE OR MORE BUILDINGS CONTAINING IN THE AGGREGATE A MINIMUM OF 25,000 SQUARE FEET.

(B) THE SHOPPING CENTER CONSISTS OF 7 TOTAL TAX PARCELS. THE TOTAL AREA TO THE ULTIMATE RIGHT-OF-WAY LINE IS 40.66 ACRES AND THIS IS THE AREA USED FOR ALL OF THE APPLICABLE CALCULATIONS IN THIS ZONING TABLE. THE TOTAL AREA TO THE TITLE LINE IS 42.09 ACRES.

(C) PER SECTION 232-593, COMMERCIAL DISTRICTS ABUTTING AN RURAL OR RESIDENT DISTRICT BOUNDARY LINE SHALL PROVIDE A YARD WHICH SHALL NOT BE LESS THAN 75 FEET IN WIDTH, MEASURED FROM THE REAR OF THE 20-FOOT BUFFERYARD. 30 FEET IS PROVIDED ADJACENT TO THE LA FITNESS. THIS IS AN EXISTING NON-CONFORMITY THAT WILL NOT BE AFFECTED BY THIS PROPOSED APPLICATION.

PARKING SUMMARY

TOTAL EXISTING PARKING SPACES	= 1919 SPACES (5.83 SPACES/1,000 SF)
EXISTING PARKING SPACES TO BE REMOVED	= 108 SPACES
PROPOSED PARKING SPACES	= 83 SPACES
TOTAL PROPOSED PARKING SPACES	= 1894 SPACES (5.31 SPACES/1,000 SF)
PARKING REQUIREMENT	
MAJOR SHOPPING CENTER @ 5 PER 1,000 SF (356,593 SF)	= 1783 SPACES
PARKING SURPLUS	= 111 SPACES

LEGEND

- PROPERTY LINE
- BUILDING SETBACK LINE
- BUFFERYARD LINE
- PARKING SETBACK LINE
- ZONING BOUNDARY LINE
- STREAM FLOODWAY
- BUILDING LINE
- CURB
- 33 PROPOSED PARKING SUBTOTAL
- 33 EXISTING PARKING SUBTOTAL
- 10 PARKING COUNT
- 10 EXISTING PARKING COUNT
- TRAFFIC SIGN
- CONRETE
- TRAFFIC SIGN DESIGNATION
- DOORWAY

BUILDING SUMMARY

EXISTING BUILDING GFA:	SIZE
TARGET	123,000 SF
HOME DEPOT	134,516 SF
LA FITNESS	38,000 SF
LONGHORN STEAKHOUSE	10,000 SF
BAR LOUIE	5,000 SF
FAMOUS FOOTWEAR	8,554 SF
FLIRT BEAUTY	4,453 SF
JIMMY JOHNS	1,284 SF
MIRACLE EAR	1,141 SF
SPORTS CLIP	1,546 SF
HAIR CUTTERY	1,546 SF
TOTAL EXISTING BUILDING SF.	329,040 SF
PROPOSED BUILDING GFA:	
PROPOSED MULTI-UNIT RETAIL/REST.	16,862 SF
PROPOSED RETAIL	10,691 SF
TOTAL PROPOSED BUILDING SF	27,553 SF
TOTAL EXISTING GFA	329,040 SF
TOTAL PROPOSED GFA	356,593 SF
TOTAL INCREASE IN GFA	27,553 SF

APPROVAL BY GOVERNING BODY

APPROVED BY THE BENSALEM TOWNSHIP COUNCIL OF BENSALEM TOWNSHIP, BUCKS COUNTY, PENNSYLVANIA, ON THE _____ DAY OF _____,20____.

_____
_____
_____
_____

BUCKS COUNTY PLANNING COMMISSION

THIS PLAN REVIEWED BY THE BUCKS COUNTY PLANNING COMMISSION THIS _____ DAY OF _____,20___.

_____
CHAIRMAN

_____
SECRETARY

CERTIFICATE OF COUNTY RECORDER OF DEEDS

RECORDED IN THE OFFICE OF THE RECORDER OF DEEDS IN BUCKS COUNTY, PENNSYLVANIA, IN PLAN BOOK _____, PAGE _____, ON THE ____ DAY OF _____,20___.

_____ _____
SIGNATURE DATE

TOWNSHIP ENGINEER

THIS PLAN REVIEWED BY THE BENSALEM TOWNSHIP ENGINEER, THIS ____ DAY OF _____,20___

_____ _____
SIGNATURE DATE

TOWNSHIP PLANNING COMMISSION

THIS PLAN REVIEWED BY THE BENSALEM TOWNSHIP PLANNING COMMISSION, THIS ____ DAY OF _____,20___

_____ _____
SIGNATURE DATE

OWNER'S CERTIFICATION

COMMONWEALTH OF PENNSYLVANIA: SS:
COUNTY OF BUCKS

_____, UNDERSIGNED, HAS LAID OUT UPON MY LAND SITUATE IN BENSALEM TOWNSHIP, BUCKS COUNTY, PENNSYLVANIA, CERTAIN LOTS AND STREETS ACCORDING TO THE ACCOMPANYING PLAN WHICH IS INTENDED TO BE RECORDED.

_____ _____
DATE

ON THIS, ___ DAY OF _____, 20___, BEFORE ME, A NOTARY PUBLIC, THE UNDERSIGNED OFFICER, PERSONALLY APPEARED _____, KNOWN TO BE (OR SATISFACTORILY PROVEN) TO BE THE PERSON WHOSE NAME IS SUBSCRIBED TO THE ACCOMPANYING CERTIFICATE AND ACKNOWLEDGED THAT HE/SHE EXECUTED THE SAME FOR THE PURPOSES THEREIN CONTAINED.

IN WITNESS WHEREOF, I HAVE HEREUNTO SET MY HAND AND OFFICIAL SEAL.

_____
NOTARY PUBLIC

CORPORATE CERTIFICATION

COMMONWEALTH OF PENNSYLVANIA
COUNTY OF BUCKS

ON THE _____ DAY OF _____,20____ BEFORE ME, THE SUBSCRIBER, A NOTARY PUBLIC OF THE COMMONWEALTH OF PENNSYLVANIA, RESIDING IN _____ PERSONALLY APPEARED _____, WHO ACKNOWLEDGED HIMSELF/HERSELF TO BE THE _____ OF _____, A CORPORATION, AND THAT AS SUCH BEING AUTHORIZED TO DO SO, HE/SHE EXECUTED THE FOREGOING PLAN BY SIGNING THE NAME OF SAID CORPORATION BY HIMSELF/HERSELF AS THAT SAID CORPORATION IS THE OWNER OF THE LAND SHOWN HEREON. ALL NECESSARY APPROVALS OF THIS PLAN HAVE BEEN OBTAINED AND IS ENDORSED THEREON AND SAID CORPORATION DESIRES THAT THIS PLAN BE DULY RECORDED.

_____ _____
NOTARY PUBLIC MY COMMISSION EXPIRES

I, _____, ACKNOWLEDGE MYSELF TO BE THE _____ OF _____, A CORPORATION, AND THAT AS SUCH BEING AUTHORIZED TO DO SO, HEREBY CERTIFY THAT THE CORPORATION IS THE SOLE REGISTERED OWNER OF THE LAND HEREIN SUBDIVIDED AND THAT THERE ARE NO SUITS PENDING AFFECTING THE TITLE OF THE SAME AND THAT I DO HEREBY ADOPT THIS PLAN AND DESIRE THE SAME TO BE RECORDED. I DO FURTHER SAVE THE TOWNSHIP HARMLESS AND INDEMNIFY THE TOWNSHIP OF BENSALEM AGAINST ANY LIABILITY OR LOSS RESULTING FROM THE SUBDIVISION OR DEVELOPMENT OF THIS PLAT FOR WHATEVER REASON PRESENT OR FUTURE.

_____ _____
CORPORATE OFFICIAL OFFICE

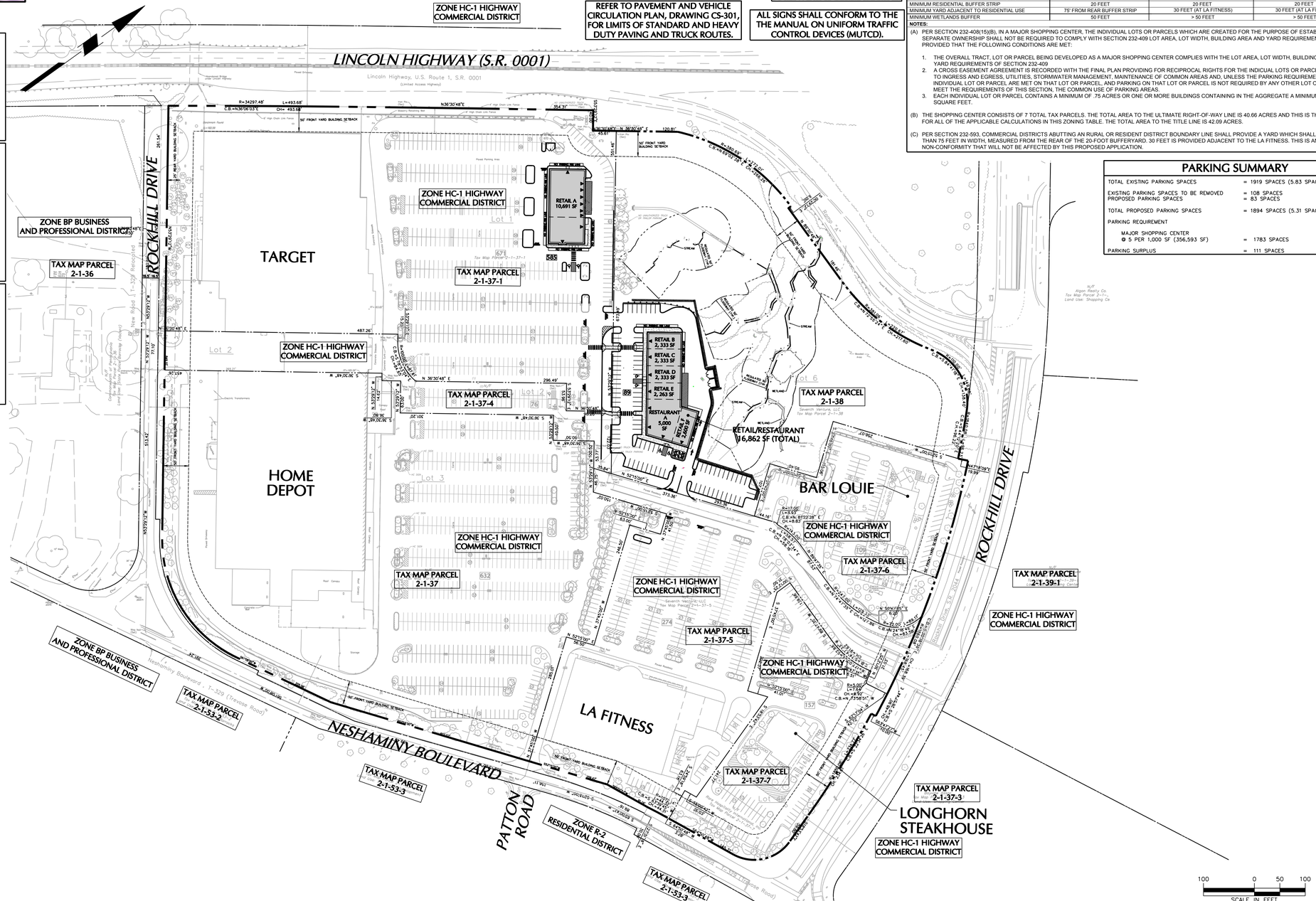

Date	Description	No.
8/8/2016	REVISIONS PER TOWNSHIP AND COUNTY COMMENTS	1.

REVISIONS

BRIAN M. CONLON DATE
PROFESSIONAL ENGINEER
PA Lic. No. PE061782

LANGAN
30 South 17th Street, Suite 1300, Philadelphia, PA 19103
T: 215.864.0640 F: 215.864.0671 www.langan.com
NEW JERSEY NEW YORK CONNECTICUT PENNSYLVANIA OHIO VIRGINIA WASHINGTON DC FLORIDA NORTH DAKOTA CALIFORNIA
ABU DHABI ATHENS DOHA DUBAI ISTANBUL
Langan Engineering, Environmental, Surveying and Landscape Architecture, D.P.C.
Langan Engineering and Environmental Services, Inc.
Langan CT, Inc.
Langan International LLC
Collectively known as Langan

Project
THE MARKETPLACE AT NESHAMINY
BENSALEM TOWNSHIP
BUCKS COUNTY PENNSYLVANIA

Drawing Title
MASTER SITE PLAN

Project No. 220048102	Drawing No. CS-100
Date 24 JUNE 2016	
Scale 1"=100'	
Drawn By TFH	
Checked By BMC	SHEET 5 OF 29

©2016 Langan

Filename: \\langan.com\data\PH\data1\220048102\Cadd Data - 220048102\SheetFiles\2016.08.08 - NPDES Revised Submission\220048102-CS-100.dwg Date: 8/15/2016 Time: 09:06 User: ddonchez Style Table: Langan.stb Layout: CS-100

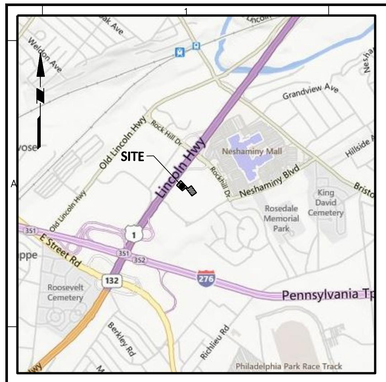

LOCATION MAP

1"=2000'

GENERAL SITE NOTES:

1. THE CONTRACTOR SHALL FURNISH, INSTALL, TEST AND COMPLETE ALL WORK TO THE SATISFACTION OF THE ENGINEER AND OWNER IN ACCORDANCE WITH THE CONTRACT DOCUMENTS. THE CONTRACTOR IS SOLELY RESPONSIBLE FOR MEANS AND METHODS OF CONSTRUCTION; AS SUCH, THESE PLANS DO NOT COMPLETELY REPRESENT, NOR ARE THEY INTENDED TO REPRESENT, ALL SPECIFIC INSTRUCTIONS REQUIRED FOR SITEWORK CONSTRUCTION. THE CONTRACTOR IS RESPONSIBLE TO CONSTRUCT ALL IMPROVEMENTS DEPICTED ON THESE PLANS IN ACCORDANCE WITH ALL APPLICABLE RULES, REGULATIONS AND LAWS IN EFFECT AT THE TIME OF CONSTRUCTION.
2. THE CONTRACTOR SHALL ACCEPT THE SITE AS IS. THE CONTRACTOR SHALL ASSESS CONDITIONS, AND THE KIND, QUALITY AND QUANTITY OF WORK REQUIRED. THE OWNER AND ENGINEER MAKE NO GUARANTEE IN REGARD TO THE ACCURACY OF ANY INFORMATION THAT WAS OBTAINED DURING INVESTIGATIONS. THE CONTRACTOR SHALL: MAKE A THOROUGH SITE INSPECTION IN ORDER TO FIELD CHECK EXISTING SITE CONDITIONS; CORRELATE CONDITIONS WITH THE DRAWINGS; AND, RESOLVE ANY POSSIBLE CONSTRUCTION CONFLICTS WITH THE OWNER AND ENGINEER PRIOR TO COMMENCEMENT OF WORK. THE CONTRACTOR SHALL PERFORM ADDITIONAL TOPOGRAPHIC SURVEYS HE/SHE DEEMS NECESSARY, PROVIDED THEY ARE COORDINATED WITH THE OWNER. ANY CONDITIONS DETERMINED BY THE CONTRACTOR THAT DIFFER FROM THE INFORMATION SHOWN ON THE DRAWINGS THAT ARE NOT BROUGHT TO THE ATTENTION OF THE OWNER AND ENGINEER PRIOR TO THE START OF WORK SHALL NOT BE CONSIDERED GROUNDS FOR ADDITIONAL PAYMENT OR CHANGES TO THE CONTRACT DURATION, OR ANY OTHER CLAIMS AGAINST THE OWNER OR OWNER'S ENGINEER.
3. THE CONTRACTOR SHALL, WHEN HE/SHE DEEMS NECESSARY, PROVIDE A WRITTEN REQUEST FOR INFORMATION (RFI) TO THE OWNER AND/OR OWNER'S DESIGNATED REPRESENTATIVE, AND ENGINEER PRIOR TO THE CONSTRUCTION OF ANY SPECIFIC SITEWORK ITEM. THE (RFI) SHALL BE IN A FORM ACCEPTABLE TO OWNER AND/OR OWNER'S DESIGNATED REPRESENTATIVE, AND ENGINEER AND SHALL ALLOW FOR A MINIMUM OF THREE WORK DAYS FOR A WRITTEN REPLY. RFIS SHALL BE NUMBERED CONSECUTIVELY BY DATE SUBMITTED. THE CONTRACTOR SHALL BE SOLELY RESPONSIBLE FOR SITEWORK ITEMS CONSTRUCTED DIFFERENTLY THAN INTENDED OR AS DEPICTED ON THE PLANS.
4. INFORMATION RELATED TO ELEVATIONS AND PROPOSED UTILITIES (SUCH AS ROADWAY GRADES, INVERT ELEVATIONS, RIM ELEVATIONS, GRATE ELEVATIONS, BUILDING FINISHED FLOOR ELEVATIONS, ETC.) MAY BE FOUND IN MORE THAN ONE LOCATION IN THE CONTRACT DOCUMENTS. THE CONTRACTOR SHALL SUFFICIENTLY REVIEW ALL PLANS, PROFILES AND ANY OTHER INFORMATION IN THE CONTRACT DOCUMENTS FOR CONSISTENCY PRIOR TO BID. ANY INCONSISTENCIES OR DISCREPANCIES THAT ARE FOUND BY THE CONTRACTOR OR HIS ASSIGNS SHALL BE IMMEDIATELY BROUGHT TO THE ATTENTION OF THE OWNER AND ENGINEER IN WRITING, IN THE FORMAT OF AN RFI PRIOR TO BID.
5. THERE ARE ADDITIONAL NOTES, SPECIFICATIONS AND REQUIREMENTS CONTAINED THROUGHOUT THE PLAN SET AS WELL AS REFERENCES TO SPECIFICATIONS FROM APPLICABLE GOVERNING AUTHORITIES AND INDUSTRY STANDARDS. IT IS THE CONTRACTOR'S RESPONSIBILITY TO OBTAIN, REVIEW AND ADHERE TO ALL THESE DOCUMENTS.
6. CONTRACTOR IS SPECIFICALLY CAUTIONED THAT ALL CONSTRUCTION STAKEOUT FOR THIS PROJECT MUST BE COMPLETED FROM THE SITE SPECIFIC SURVEY CONTROL (HORIZONTAL AND VERTICAL) UPON WHICH THE DESIGN IS BASED. THE CONTRACTOR SHOULD NOT RELY ON OR RE-ESTABLISH SURVEY CONTROL BY GPS OR OTHER METHODS FOR USE IN CONSTRUCTION STAKEOUT OR ANY OTHER PURPOSE FOR THIS PROJECT. ANY DISCREPANCIES BETWEEN THE EXISTING HORIZONTAL OR VERTICAL DATA SHOWN ON THESE DRAWINGS AND THAT ENCOUNTERED IN THE FIELD MUST BE REPORTED TO THE DESIGN TEAM PRIOR TO CONSTRUCTION FOR RESOLUTION.

SIGN LEGEND

STOP	RESERVED PARKING / PENALTY / VAN ACCESSIBLE	DO NOT ENTER	
① R1-1	② R7-8	③ R5-1	④ W11-2

NOTES:
1. THE SYMBOLS REPRESENTING THE PROPOSED SIGN IS SHOWN GRAPHICALLY AND DO NOT REPRESENT EXACT LOCATIONS. THE LOCATIONS OF THE SIGNS SHALL BE PLACED AND COORDINATED WITH THE TOWNSHIP OF BENSALEM.
2. REFER TO DETAIL FOR INFORMATION OF THE SIGN.
3. ALL SIGNS SHALL CONFORM TO THE "MANUAL OF UNIFORM TRAFFIC CONTROL DEVICES" (LATEST EDITION) FROM THE U.S. DEPARTMENT OF TRANSPORTATION.
4. SIGN MATERIALS SHALL BE MADE OF REFLECTIVE SHEETING ON ALUMINUM BLANKS MOUNTED ON GALVANIZED STEEL POSTS. ALL CONFORMING TO PADOT STANDARD SPECIFICATIONS.

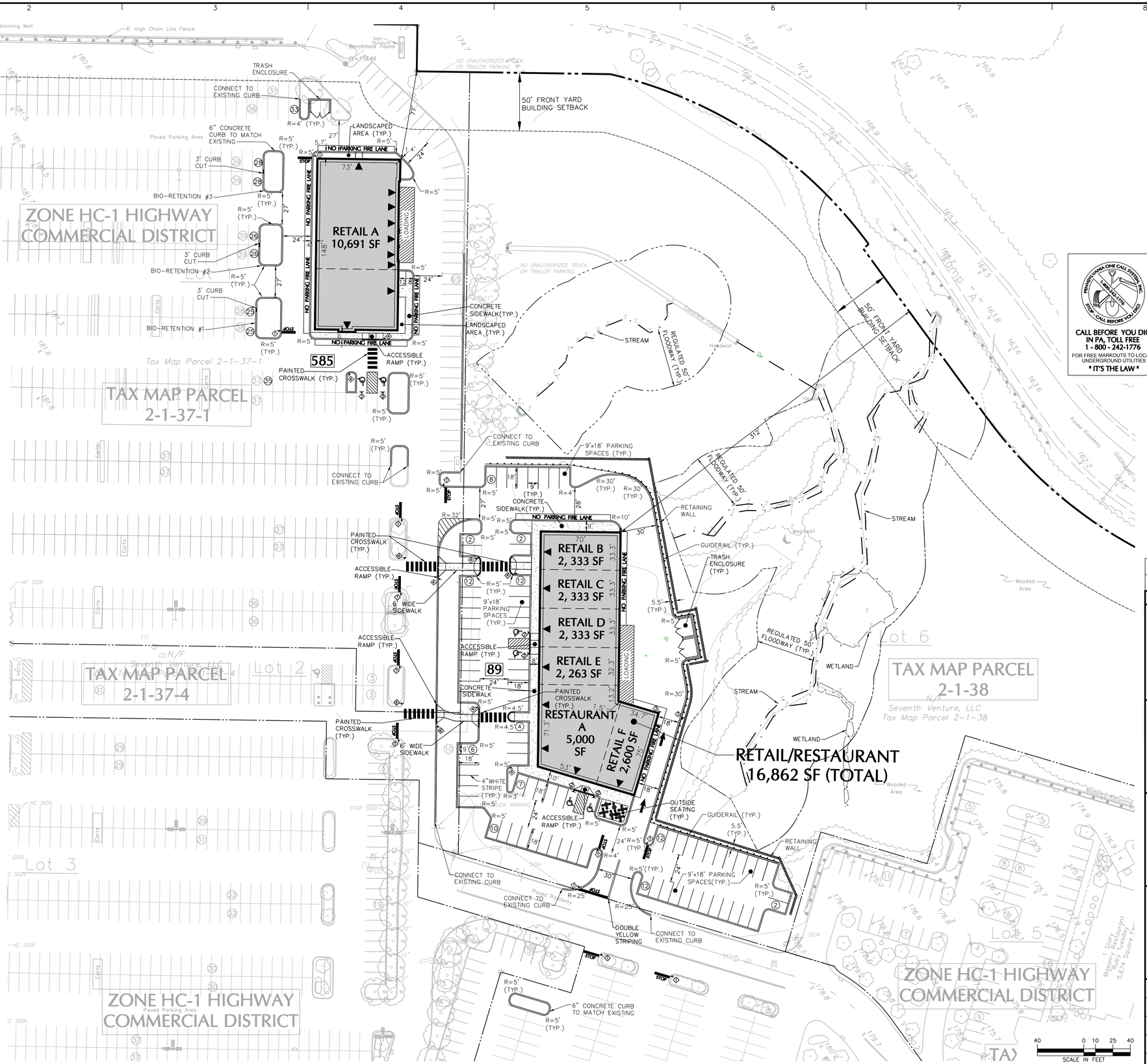

LEGEND

- PROPERTY LINE
- BUILDING SETBACK LINE
- BUFFERYARD LINE
- PARKING SETBACK LINE
- GUIDERAIL
- ZONING BOUNDARY LINE
- BUILDING LINE
- CURB
- 33 PROPOSED PARKING SUBTOTAL
- (33) EXISTING PARKING SUBTOTAL
- 10 PARKING COUNT
- (0) EXISTING PARKING COUNT
- TRAFFIC SIGN
- CONRETE
- TRAFFIC SIGN DESIGNATION
- DOORWAY

REFER TO DETAIL SHEET CS-501 FOR SITE IMPROVEMENT DETAILS

REFER TO PAVEMENT AND VEHICLE CIRCULATION PLAN, DRAWING CS-301, FOR LIMITS OF STANDARD AND HEAVY DUTY PAVING AND TRUCK ROUTES.

ALL SIGNS SHALL CONFORM TO THE THE MANUAL ON UNIFORM TRAFFIC CONTROL DEVICES (MUTCD).

REFER TO DRAWING CS-100 FOR NOTES AND SITE STATISTICS.

REFER TO ARCHITECTURAL PLAN SETS FOR ALL BUILDING INFORMATION, INCLUDING ELEVATIONS, FLOOR PLANS, UTILITY CONNECTIONS AND SIGNAGE INFORMATION.

PENNSYLVANIA ONE CALL SYSTEM, INC. 1-800-ACT-UTIL STOP - CALL BEFORE YOU DIG!

CALL BEFORE YOU DIG IN PA, TOLL FREE 1 - 800 - 242-1776
FOR FREE MARKOUTS TO LOCATE UNDERGROUND UTILITIES
" IT'S THE LAW "

Date	Description	No.
8/8/2016	REVISIONS PER TOWNSHIP AND COUNTY COMMENTS	1.

REVISIONS

BRIAN M. CONLON — DATE
PROFESSIONAL ENGINEER
PA Lic. No. PE061782

LANGAN
30 South 17th Street, Suite 1300, Philadelphia, PA 19103
T: 215.864.0640 F: 215.864.0671 www.langan.com
NEW JERSEY NEW YORK CONNECTICUT PENNSYLVANIA OHIO
VIRGINIA WASHINGTON DC FLORIDA NORTH DAKOTA CALIFORNIA
ABU DHABI ATHENS DOHA DUBAI ISTANBUL
Langan Engineering, Environmental, Surveying and Landscape Architecture, D.P.C.
Langan Engineering and Environmental Services, Inc.
Langan CT, Inc.
Langan International LLC
Collectively known as Langan

Project

THE MARKETPLACE AT NESHAMINY

BENSALEM TOWNSHIP
BUCKS COUNTY — PENNSYLVANIA

Drawing Title

SITE CONSTRUCTION PLAN

Project No. 220048102	Drawing No. CS-101
Date 24 JUNE 2016	
Scale 1"=40'	
Drawn By TFH	
Checked By BMC	SHEET 6 OF 29

©2016 Langan

Filename: \\langan.com\data\PH\data1\220048102\Cadd Data - 220048102\SheetFiles\2016.08.08 - NPDES Revised Submission\220048102-CS-101.dwg Date: 8/15/2016 Time: 09:08 User: ddonchez Style Table: Langan.stb Layout: CS-101

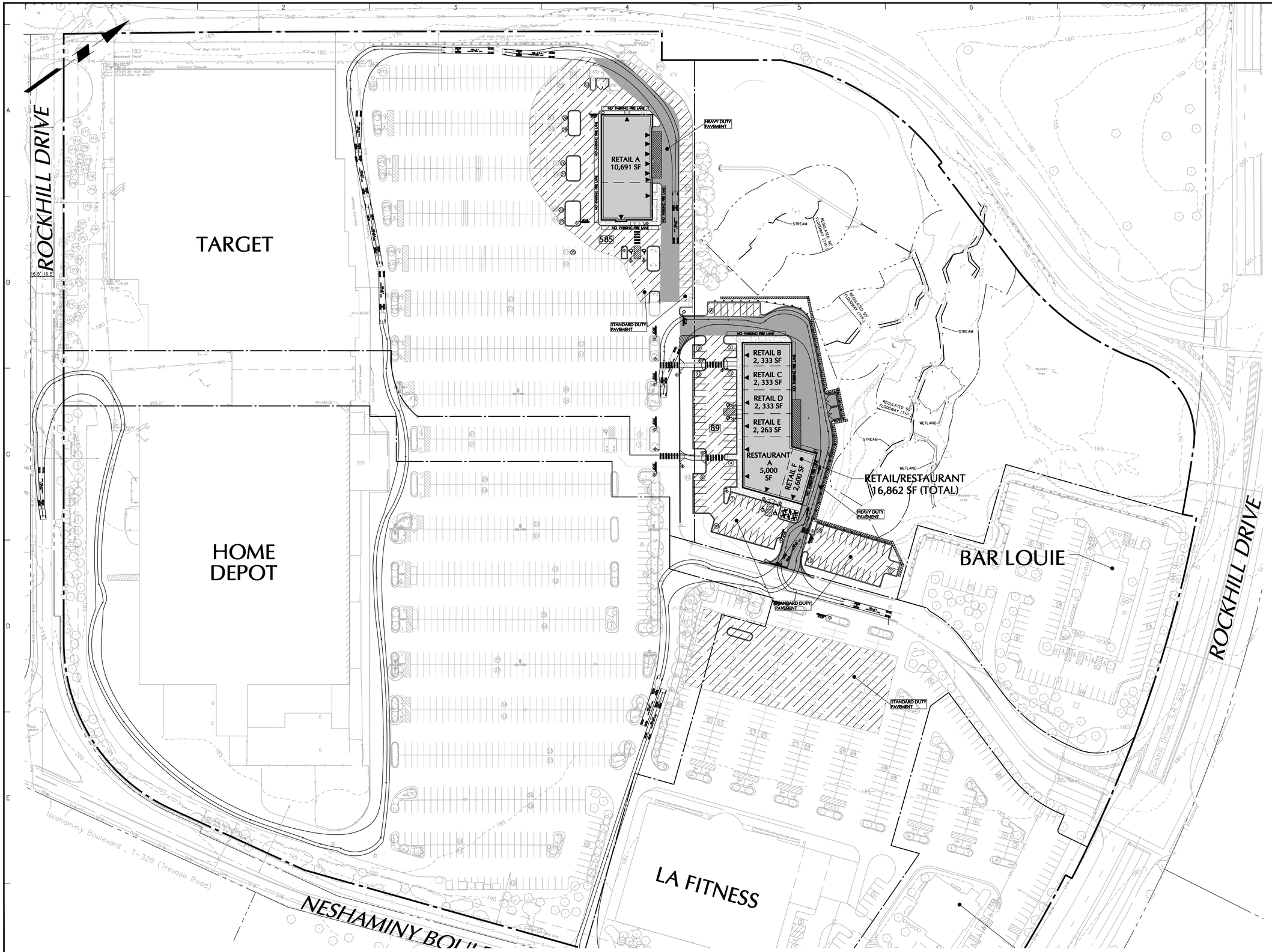

PAVEMENT PLAN
SCALE 1" = 60'

60 0 20 40 60
SCALE IN FEET

TRUCK LEGEND

REPRESENTS AASHTO WB-67 SEMITRAILER TRUCKS

PAVING LEGEND

REPRESENTS HEAVY DUTY ASPHALT PAVEMENT

REPRESENTS STANDARD DUTY ASPHALT PAVEMENT

No.	Description	Date
1.	REVISIONS PER TOWNSHIP AND COUNTY COMMENTS	8/8/2016

REVISIONS

BRIAN M. CONLON — DATE
PROFESSIONAL ENGINEER
PA Lic. No. PE061782

LANGAN
30 South 17th Street, Suite 1300, Philadelphia, PA 19103
T: 215.864.0640 F: 215.864.0671 www.langan.com
NEW JERSEY NEW YORK CONNECTICUT PENNSYLVANIA OHIO VIRGINIA WASHINGTON DC FLORIDA NORTH DAKOTA CALIFORNIA ABU DHABI ATHENS DOHA DUBAI ISTANBUL
Langan Engineering, Environmental, Surveying and Landscape Architecture, D.P.C.
Langan Engineering and Environmental Services, Inc.
Langan CT, LLC
Langan International LLC
Collectively known as Langan

Project

THE MARKETPLACE AT NESHAMINY

BENSALEM TOWNSHIP
BUCKS COUNTY — PENNSYLVANIA

Drawing Title

PAVEMENT AND VEHICLE CIRCULATION PLAN

Project No. 220048102	Drawing No. CS-301
Date 24 JUNE 2016	
Scale 1" = 60'	
Drawn By TFH	
Checked By BMC	SHEET 7 OF 29

© 2016 Langan

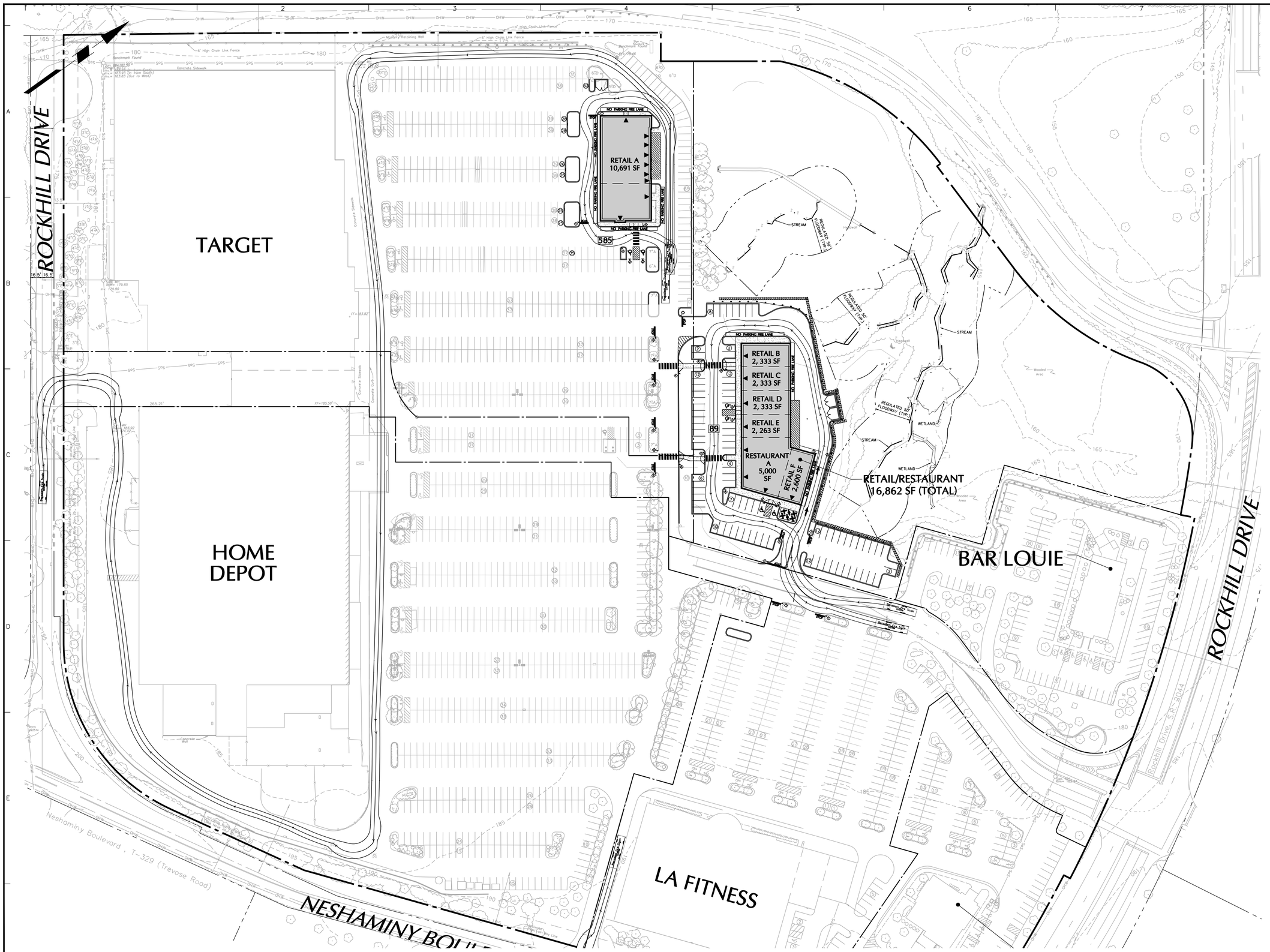

TRUCK LEGEND

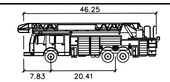

Bensalem Fire Truck

Width	: 10.50 feet
Track	: 10.00 feet
Lock to Lock Time	: 6.0 feet
Steering Angle	: 40.0 feet

Date	Description	No.
REVISIONS		

BRIAN M. CONLON — DATE
PROFESSIONAL ENGINEER
PA Lic. No. PE061782

LANGAN
30 South 17th Street, Suite 1300, Philadelphia, PA 19103
T: 215.864.0640 F: 215.864.0671 www.langan.com
NEW JERSEY NEW YORK CONNECTICUT PENNSYLVANIA OHIO VIRGINIA WASHINGTON DC FLORIDA NORTH DAKOTA CALIFORNIA ABU DHABI ATHENS DOHA DUBAI ISTANBUL
Langan Engineering, Environmental, Surveying and Landscape Architecture, D.P.C.
Langan Engineering and Environmental Services, Inc.
Langan CT, LLC
Langan International LLC
Collectively known as Langan

Project

THE MARKETPLACE AT NESHAMINY

BENSALEM TOWNSHIP
BUCKS COUNTY — PENNSYLVANIA

Drawing Title

FIRE TRUCK CIRCULATION PLAN

Project No. 220048102	Drawing No. CS-302
Date 8 AUGUST 2016	
Scale 1" = 60'	
Drawn By TFH	
Checked By BMC	SHEET 8 OF 29

© 2016 Langan

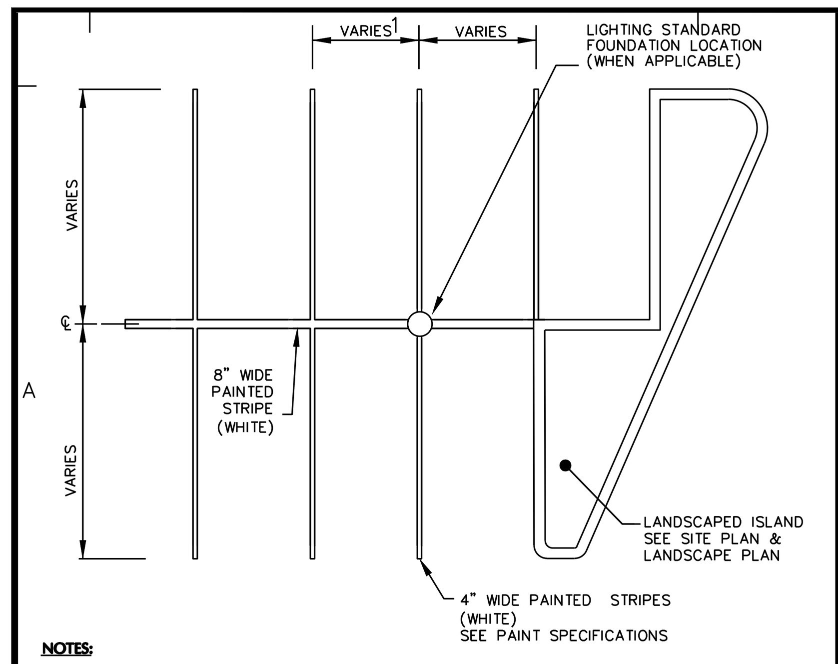

NOTES:

1. MARKINGS FOR PARKING LOT SHALL BE ACCORDING TO REQUIREMENTS AS OUTLINED IN SECTION 3A OF THE MANUAL ON UNIFORM TRAFFIC CONTROL DEVICES FOR STREETS AND HIGHWAYS.
2. IF DIFFERENT THAN THE ABOVE, PARKING STALL STRIPING TO MATCH EXISTING.

PARKING STALL STRIPING

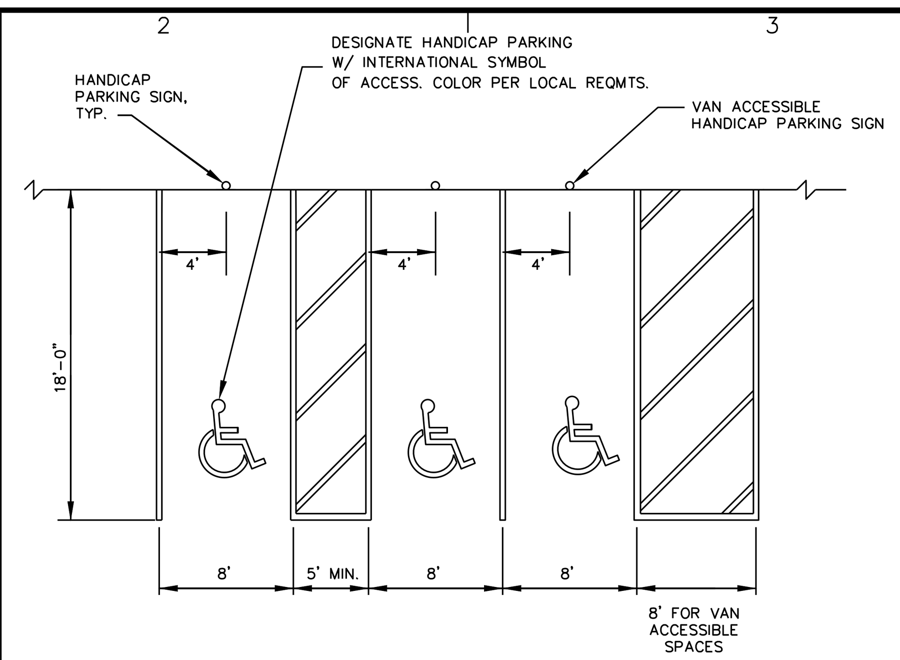

NOTES:

1. MARKINGS FOR PARKING LOT SHALL BE ACCORDING TO REQUIREMENTS AS OUTLINED IN SECTION 3A OF THE MANUAL ON UNIFORM TRAFFIC CONTROL DEVICES FOR STREETS AND HIGHWAYS.
2. SEE SITE PLAN FOR EXACT LAYOUT.

HANDICAP PARKING STALL STRIPING

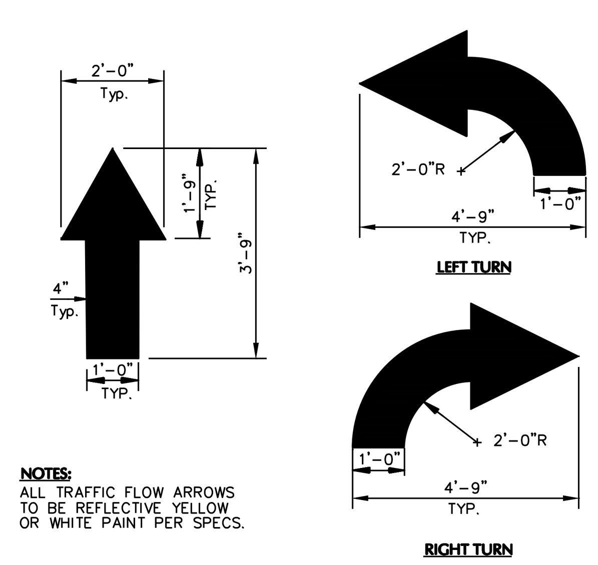

NOTES:
ALL TRAFFIC FLOW ARROWS TO BE REFLECTIVE YELLOW OR WHITE PAINT PER SPECS.

TRAFFIC FLOW ARROWS

NOTES:

1. WORDS AND ARROWS FOR DRIVEWAYS SHALL BE APPLIED ACCORDING TO REQUIREMENTS AS OUTLINED IN SECTION 3B OF THE MANUAL ON UNIFORM TRAFFIC CONTROL DEVICES FOR STREETS AND HIGHWAYS
2. THESE WORDS AND BAR ARE TO BE PAINTED REFLECTIVE WHITE.

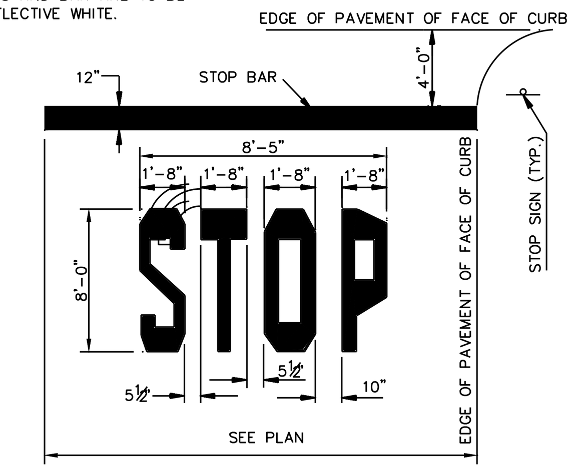

STOP BAR

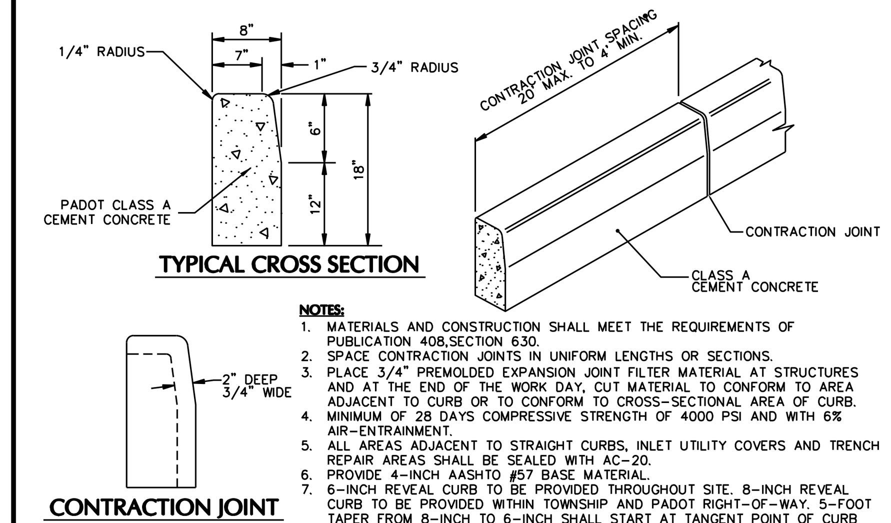

NOTES:

1. MATERIALS AND CONSTRUCTION SHALL MEET THE REQUIREMENTS OF PUBLICATION 408,SECTION 630.
2. SPACE CONTRACTION JOINTS IN UNIFORM LENGTHS OR SECTIONS.
3. PLACE 3/4" PREMOLDED EXPANSION JOINT FILTER MATERIAL AT STRUCTURES AND AT THE END OF THE WORK DAY, CUT MATERIAL TO CONFORM TO AREA ADJACENT TO CURB OR TO CONFORM TO CROSS-SECTIONAL AREA OF CURB.
4. MINIMUM OF 28 DAYS COMPRESSIVE STRENGTH OF 4000 PSI AND WITH 6% AIR-ENTRAINMENT.
5. ALL AREAS ADJACENT TO STRAIGHT CURBS, INLET UTILITY COVERS AND TRENCH REPAIR AREAS SHALL BE SEALED WITH AC-20.
6. PROVIDE 4-INCH AASHTO #57 BASE MATERIAL.
7. 6-INCH REVEAL CURB TO BE PROVIDED THROUGHOUT SITE. 8-INCH REVEAL CURB TO BE PROVIDED WITHIN TOWNSHIP AND PADOT RIGHT-OF-WAY. 5-FOOT TAPER FROM 8-INCH TO 6-INCH SHALL START AT TANGENT POINT OF CURB RADIUS FOR ALL DRIVEWAYS.
8. CONCRETE CURB TO MATCH EXISTING.

6" CONCRETE CURB

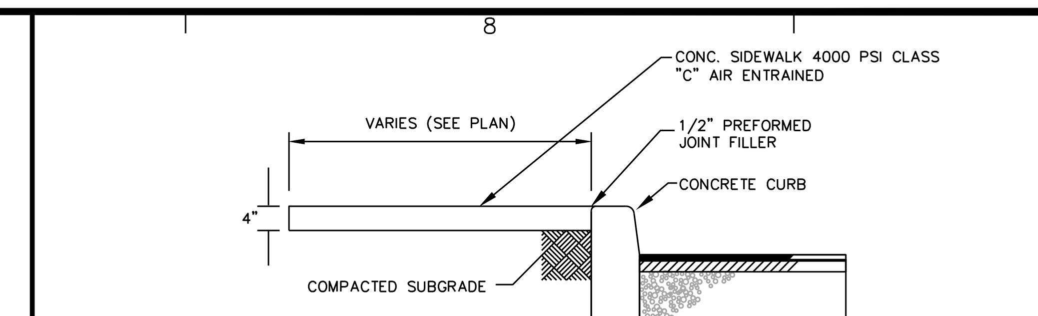

NOTES:

1. MINIMUM CROSS SLOPE 1/8" PER FOOT UNLESS OTHERWISE INDICATED ON DRAWINGS.
2. PROVIDE 1/2" PREMOULDED EXPANSION JOINTS AT 12' INTERVALS FOR 4' WIDE WALKS AND AT 10' INTERVALS FOR WALKS 5' WIDE OR GREATER. EXPANSION JOINT MATERIAL SHOULD CONFORM TO THE REQUIREMENTS OF AASHTO M-33.
3. PROVIDE CONTRACTION JOINTS AT 4 FOOT INTERVALS FOR WALK LESS THAN 5' WIDE AND AT 5' INTERVALS FOR WALKS 5' WIDE OR GREATER
4. SUBGRADE BENEATH CONCRETE TO BE COARSE GRAINED SAND (6" MIN.)
5. ALL CONCRETE SHALL HAVE A 28-DAY COMPRESSIVE STRENGTH OF 4,000 PSI.

SIDEWALK

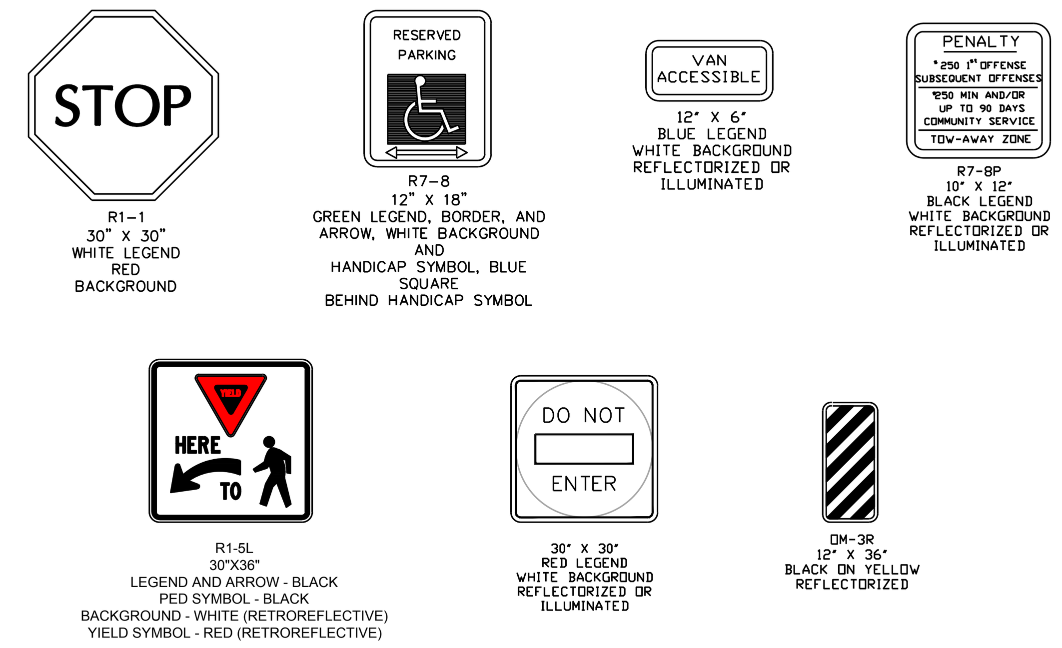

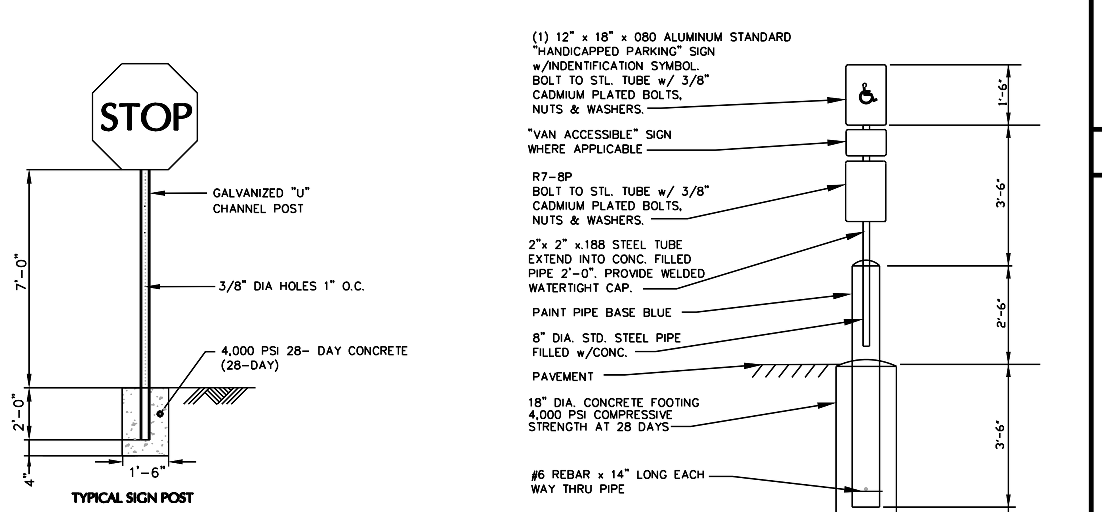

HANDICAPPED SIGN POST
HANDICAPPED PARKING SIGN SHALL CONFORM WITH CURRENT STATE & LOCAL CODES AND REGULATIONS.
ADD "VAN ACCESSIBLE SPACE" SIGN AS APPLICABLE.

NOTES:

1. ALL POSTS SHALL BE OF ADEQUATE LENGTH TO MEET THE REQUIREMENTS FOR ERECTION AS STATED IN THE CURRENT "MANUAL ON UNIFORM TRAFFIC CONTROL DEVICES FOR STREETS AND HIGHWAYS".
2. ALL POSTS SHALL BE EMBEDDED 2'-0" MINIMUM BELOW GRADE.
3. ALL STEEL POSTS AND BRACKETS SHALL BE CUT, BENT AND HOLES PUNCHED AND DRILLED BEFORE GALVANIZING. GALVANIZING SHALL BE IN CONFORMANCE WITH CURRENT ASTM SPECIFICATIONS.
4. ALL TRAFFIC CONTROL SIGNS ARE TO BE MOUNTED TO BREAK-AWAY SIGN POSTS.
5. SIGN PANEL SIZES SHALL DETERMINE POST TYPE AND NUMBERS.
6. BOLTS SHALL NOT PROTRUDE MORE THAN ¾" BEYOND THE NUT WHEN TIGHT BUT SHALL ENGAGE ALL THREADS IN THE NUT.
7. ALL TRAFFIC AND PEDESTRIAN SIGNAGE DIMENSIONS, COLORS, DETAILS, LOCATION AND INSTALLATION SHALL BE IN ACCORDANCE WITH THE CURRENT "MANUAL ON UNIFORM TRAFFIC CONTROL DEVICES FOR STREETS AND HIGHWAYS" AND ALL CURRENT AMENDMENTS AND THE CURRENT "STANDARD HIGHWAY SIGNS PUBLICATIONS".
8. ALL SIGNS SHALL BE OF THE ENCAPSULATED LENS TYPE.
9. ALL SIGN MATERIALS SHALL BE MADE OF REFLECTIVE SHEETING ON ALUMINUM BLANKS MOUNTED ON GALVANIZED STEEL POSTS, ALL CONFORMING TO NJDOT STANDARD SPECIFICATIONS.
10. ALL CONCRETE SHALL HAVE A 28-DAY COMPRESSIVE STRENGTH OF 4,000 PSI.

SIGNS

NOTE:
TRUNCATED DOMES SHALL BE INSTALLED FOR ALL HANDICAP RAMPS. REFER TO DETAIL.

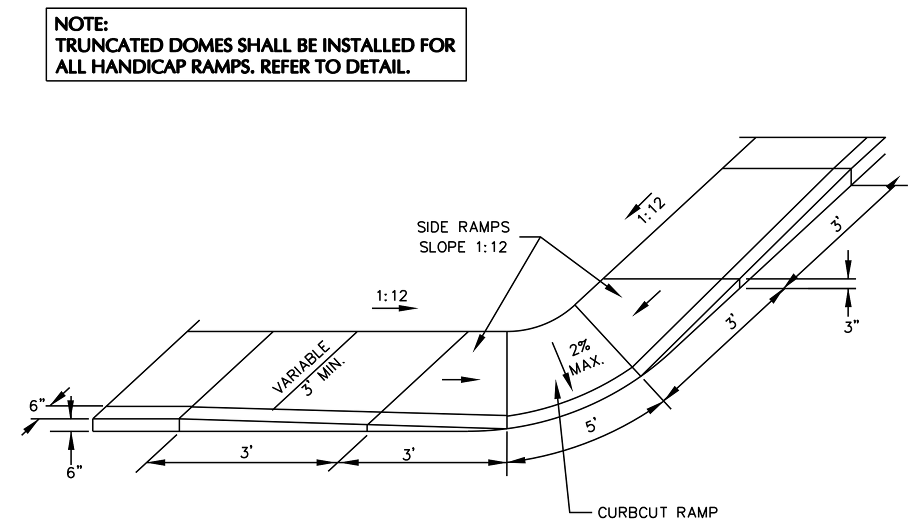

NOTE:
ALL CONCRETE SHALL HAVE A 28-DAY COMPRESSIVE STRENGTH OF 4,000 PSI.

HANDICAP RAMP (ON CORNER)

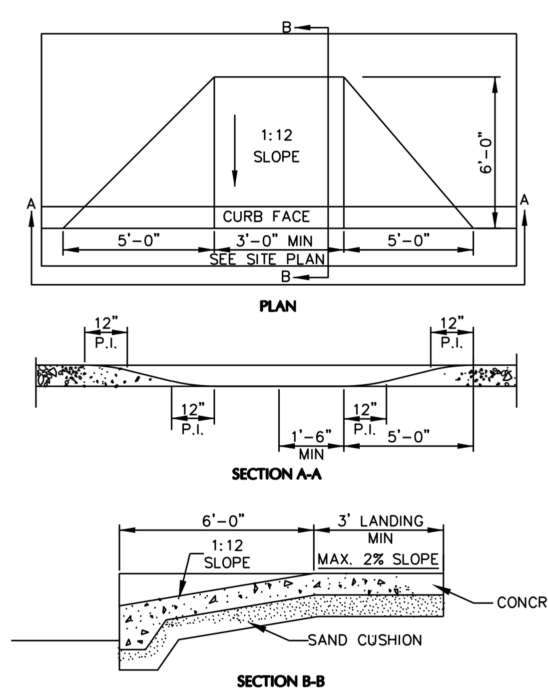

HANDICAP RAMP (ON STRAIGHT CURB)

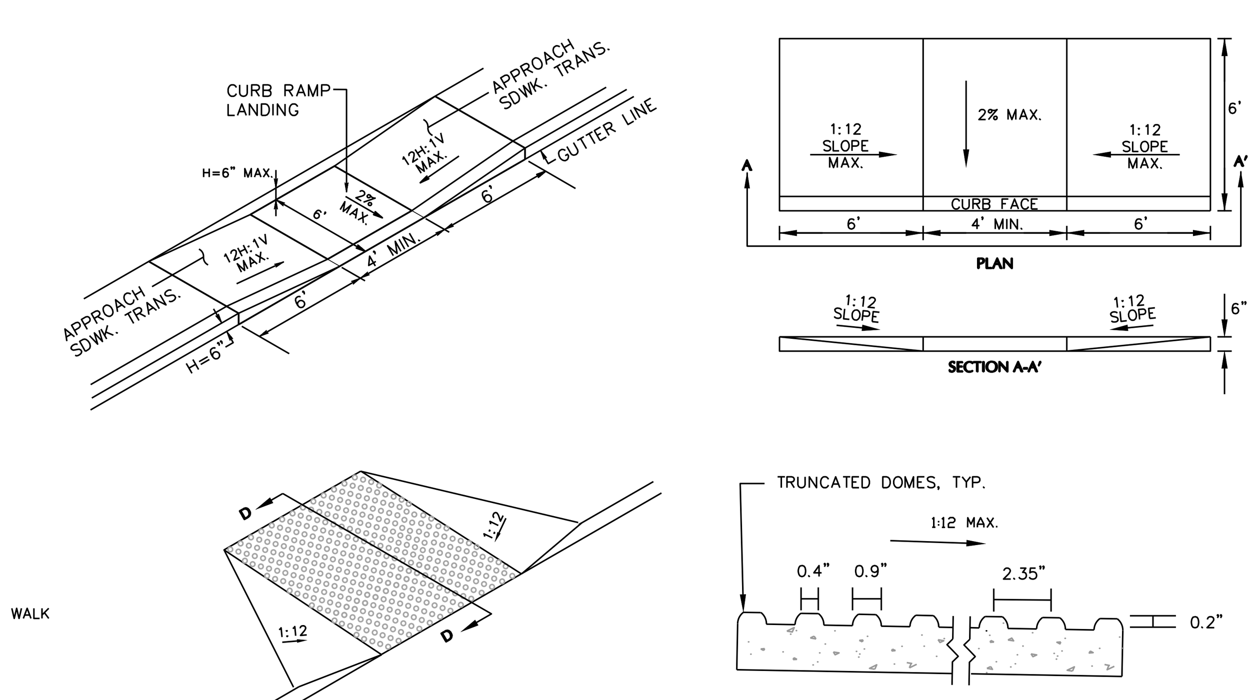

HANDICAP RAMP DETAILS

NOTES:

1. PRIOR TO CONSTRUCTION DETAILED SIGNED AND SEALED CALCULATIONS WILL BE SUBMITTED TO TOWNSHIP ENGINEER FOR REVIEW.
2. THE RETAINING WALLS WILL BE DESIGNED TO BE CONSISTENT WITH THE BUILDING ARCHITECTURE.
3. THE RETAINING WALLS ARE SUBJECT TO REVIEW AND APPROVAL OF THE CONSTRUCTION CODE OFFICIAL.
4. THIS DETAIL IS CONCEPTUAL ONLY. AN APPROVED SUBSTITUTE MAY BE SUBMITTED.

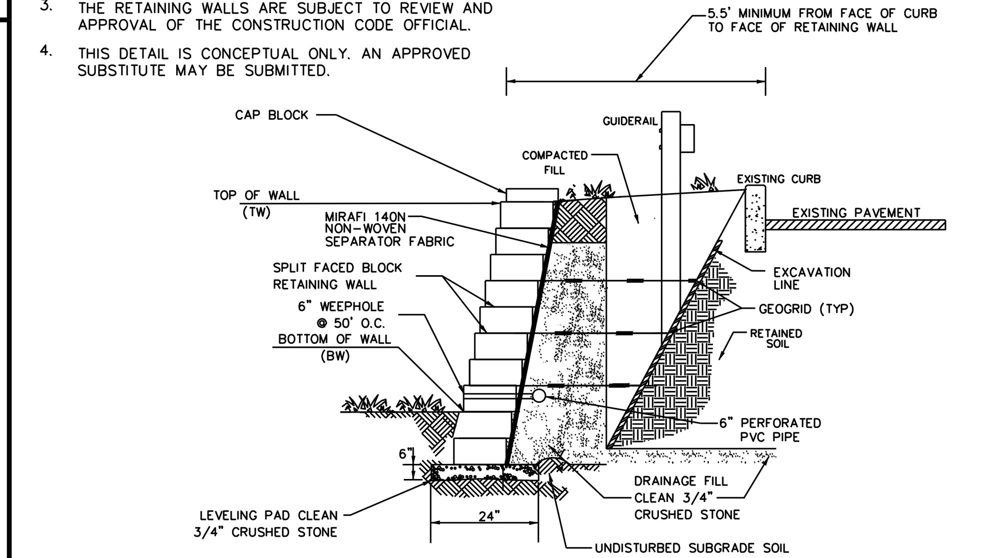

RETAINING WALL

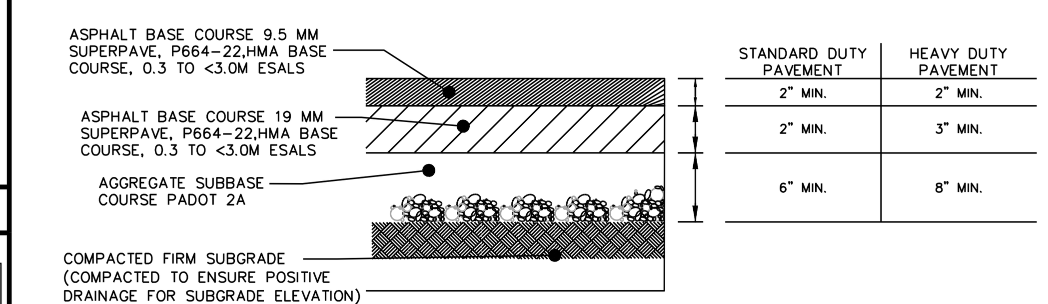

STANDARD DUTY PAVEMENT	HEAVY DUTY PAVEMENT
2" MIN.	2" MIN.
2" MIN.	3" MIN.
6" MIN.	8" MIN.

FLEXIBLE PAVEMENT SECTIONS

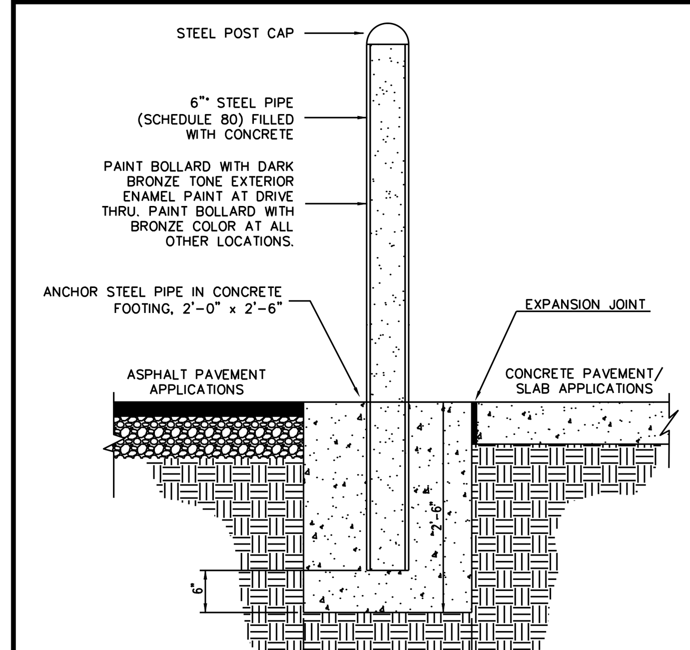

BOLLARD

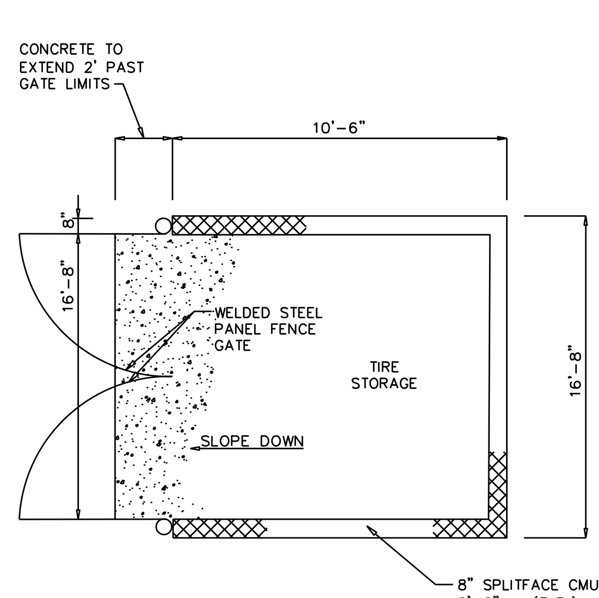

NOTE:

1. THE ENCLOSURE FACADE TO MATCH THE EXISTING BUILDING.
2. THE DUMPSTER SHALL HAVE A MASONRY ENCLOSURE AND SELF-LATCHING GATE.

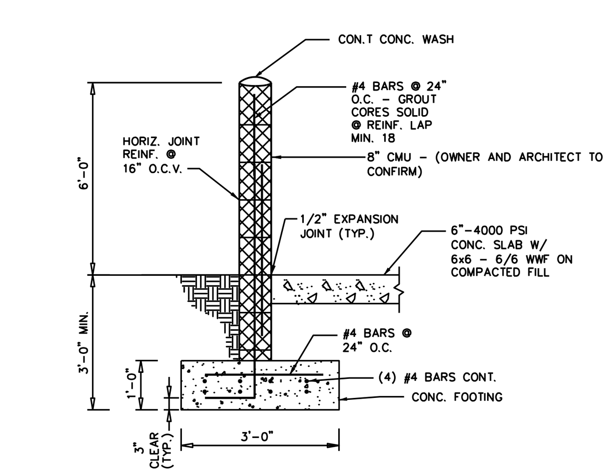

TRASH ENCLOSURE SECTION

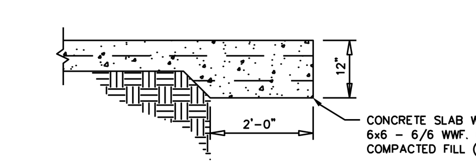

DETAIL

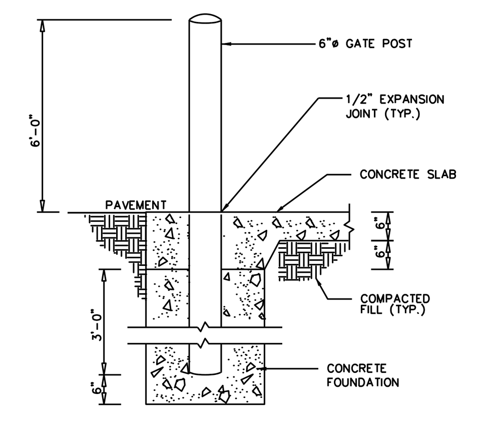

GATE POST DETAIL

TRASH ENCLOSURE

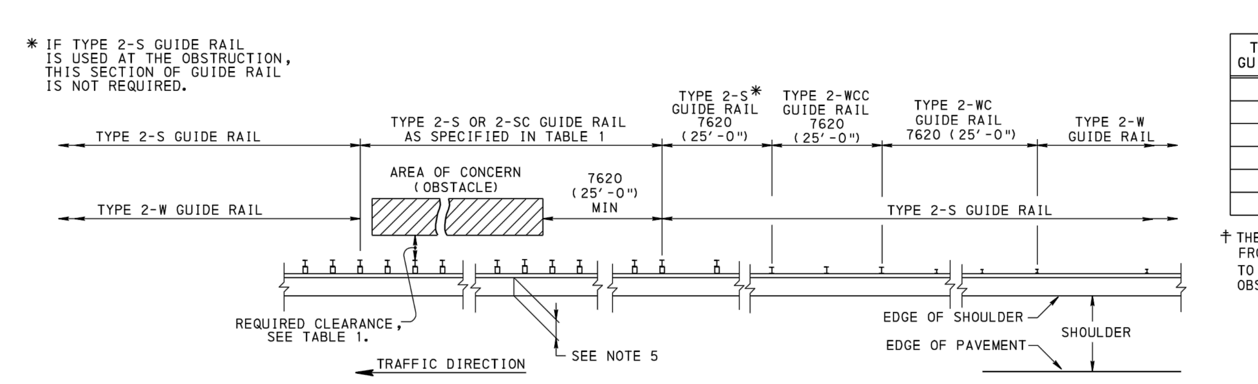

TYPICAL GUIDE RAIL TREATMENT
WHEN THE REQUIRED CLEARANCE TO OBSTRUCTION IS AVAILABLE

TABLE 1

TYPE OF GUIDE RAIL	REQUIRED † CLEARANCES
2-SCC	300 (1'-0")
2-SC	600 (2'-0")
2-S	900 (3'-0")
2-WCC	1200 (4'-0")
2-WC	1500 (5'-0")
2-W	2100 (7'-0")

† THE MINIMUM UNOBSTRUCTED DISTANCE FROM BACK OF GUIDE RAIL POST TO AREA OF CONCERN (FACE OF OBSTRUCTION).

NOTES

1. THE TREATMENTS SHOWN ARE FOR FOUR-LANE DIVIDED HIGHWAYS. USE THE APPROACH END TREATMENT AT BOTH SIDES OF THE OBSTRUCTION ON TWO-LANE FACILITIES WITH TWO-WAY TRAFFIC.
2. THIS STANDARD HAS BEEN PREPARED AS A GUIDE FOR THE PLACEMENT OF GUIDE RAIL AND MEDIAN BARRIER. IT IS IMPRACTICAL TO PROVIDE A STANDARD FOR ALL POSSIBLE CONDITIONS. MODIFICATIONS OF TREATMENTS CAN BE MADE TO FIT EXISTING CONDITIONS; HOWEVER, FOLLOW THE RECOMMENDED GUIDELINES IN PUBLICATION 13M, DM-2, CHAPTER 12.
3. THIS DISTANCE VARIES. DETERMINE THE REQUIRED LENGTH USING THE GUIDELINES FOUND IN PUBLICATION 13M, DM-2, CHAPTER 12, AND SHOW ON THE TABULATIONS. WHERE CALCULATIONS SHOW A DISTANCE LESS THAN 15000 (50'-0"), USE 15000 (50'-0") AS A MINIMUM DISTANCE.
4. WHEN THE MINIMUM UNOBSTRUCTED DISTANCE FROM BACK OF GUIDE RAIL POST TO FACE OF OBSTRUCTION IS LESS THAN 300 (1'-0"), USE TYPE 2-SCC DOUBLE NESTED RAIL.
5. THE TYPICAL DISTANCE FROM THE EDGE OF SHOULDER TO THE FRONT FACE OF THE W-BEAM RAIL ELEMENT IS 600 (2'-0"). THIS MAY VARY; BASE THE ACTUAL PLACEMENT OF THE GUIDE RAIL SYSTEM SELECTED ON FIELD CONDITIONS. LOCATE THE SYSTEM SELECTED AS FAR FROM THE EDGE OF SHOULDER AS POSSIBLE AND STILL MAINTAIN REQUIRED CLEARANCES DETERMINED FROM TABLE 1.
6. 1800 (6'-0") STEEL TUBE MAY BE USED WITHOUT SOIL PLATE.
7. ALL DIMENSIONS ARE IN MILLIMETERS UNLESS OTHERWISE NOTED. U.S. CUSTOMARY UNITS IN () PARENTHESES.

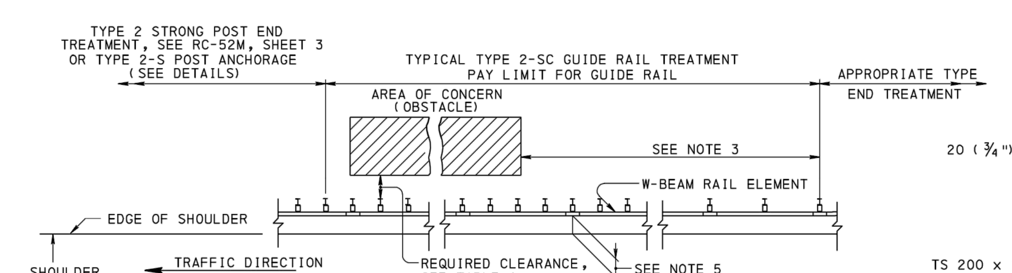

TYPICAL GUIDE RAIL TREATMENT
WHEN THE REQUIRED CLEARANCE TO OBSTRUCTION IS AVAILABLE

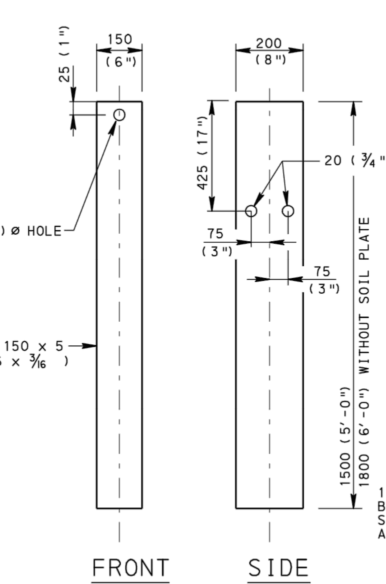

STEEL TUBE

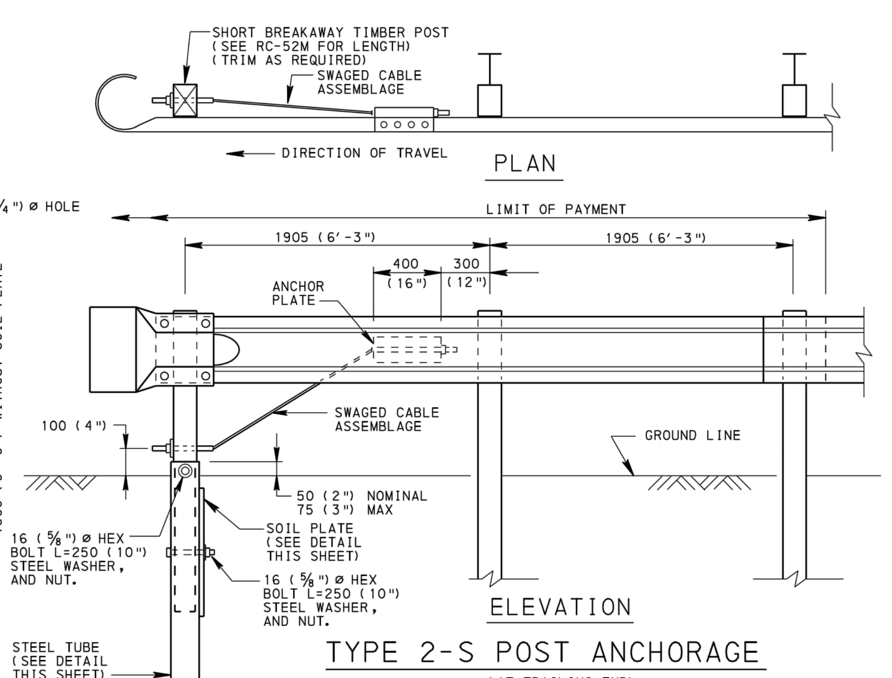

TYPE 2-S POST ANCHORAGE
(AT TRAILING END)

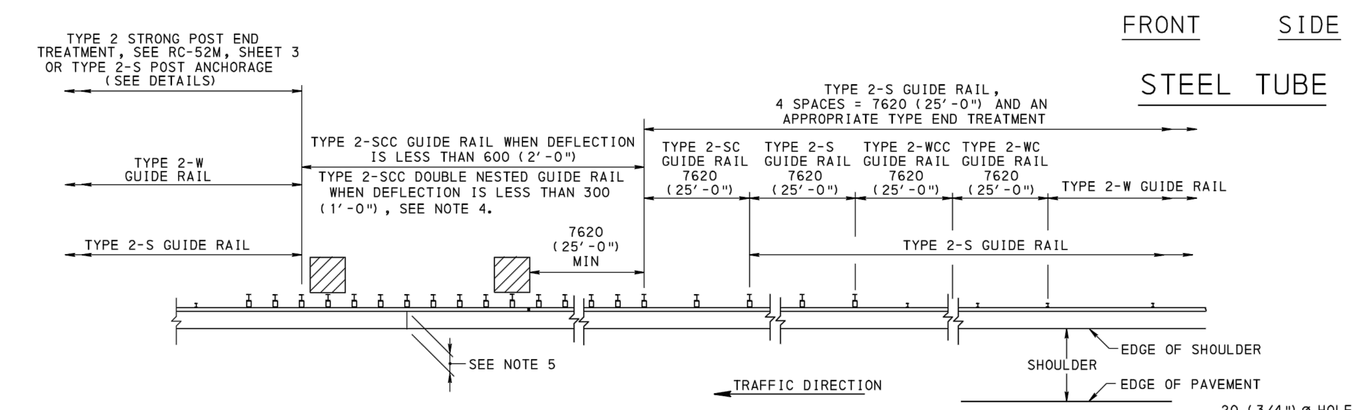

TYPICAL GUIDE RAIL TREATMENT WHEN THE REQUIRED
CLEARANCE TO OBSTRUCTION IS NOT AVAILABLE

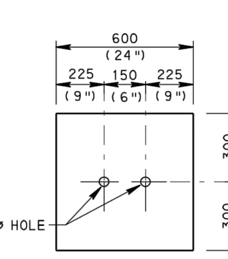

SOIL PLATE
6 (¼") THICK

NOTE: EITHER ALL METRIC OR ALL ENGLISH VALUES MUST BE USED ON PLANS. METRIC AND ENGLISH VALUES SHOWN MAY NOT BE MIXED.

COMMONWEALTH OF PENNSYLVANIA
DEPARTMENT OF TRANSPORTATION
BUREAU OF DESIGN

BARRIER PLACEMENT
AT OBSTRUCTIONS

RECOMMENDED JUN. 1, 2010	RECOMMENDED JUN. 1, 2010	SHT 1 OF 7
CHIEF, HWY. QA DIVISION	DIRECTOR, BUREAU OF DESIGN	RC-54M

GUIDERAIL

Date	Description	No.
8/8/2016	REVISIONS PER TOWNSHIP AND COUNTY COMMENTS	1.

REVISIONS

BRIAN M. CONLON — DATE
PROFESSIONAL ENGINEER
PA Lic. No. PE061782

LANGAN
30 South 17th Street, Suite 1300, Philadelphia, PA 19103
T: 215.864.0640 F: 215.864.0671 www.langan.com
NEW JERSEY NEW YORK CONNECTICUT PENNSYLVANIA OHIO VIRGINIA WASHINGTON DC FLORIDA NORTH DAKOTA CALIFORNIA
ABU DHABI ATHENS DOHA DUBAI ISTANBUL
Langan Engineering, Environmental, Surveying and Landscape Architecture, D.P.C.
Langan Engineering and Environmental Services, Inc.
Langan CT, Inc.
Langan International LLC
Collectively known as Langan

Project
THE MARKETPLACE AT NESHAMINY
BENSALEM TOWNSHIP
BUCKS COUNTY PENNSYLVANIA

Drawing Title
SITE CONSTRUCTION DETAILS

Project No. 220048102
Date 24 JUNE 2016
Scale N.T.S.
Drawn By TFH
Checked By BMC
Drawing No. CS-501
SHEET 9 OF 29

© 2014 Langan

09 August 2016

Loretta Alston
Building and Planning Department
2400 Byberry Road
Bensalem, Pennsylvania 19020

Re: Land Development Review
The Marketplace at Neshaminy
Bensalem Township, Bucks County, PA
Langan Project No. 220048102

Dear Loretta:

On behalf of the applicant, Paramount Realty, please find the enclosed revised Land Development application for the Marketplace at Neshaminy. This includes the following items:

- 15 copies of the Submission of Revised Plans Application;
- 15 copies of the Preliminary and Final Land Development Plans, last revised 8/8/16, and
- 3 copies of the Stormwater Management Report, last revised 8/8/16.

The plans have been revised in response to your professionals' review letters and our meeting with PennDOT on 7/25/16. Our responses are identified in detail below.

O'Donnell & Naccarato Review Letter, dated 11 July 2016

C. We note that we have included revised truck circulation plans for tractor trailers (WB-67) and for Bensalem fire trucks.

D. We have incorporated some landscaping around the perimeter of the building and we would request a waiver for this requirement.

E. We have met with Mr. Gans on 7/14/16. We discussed the stormwater management system at that time. Note that since that time, we have added three bio-retention islands which was a recommendation from the Bucks County Soil Conservation District.

F. The owners and Langan met with PennDOT and their engineers on 7/25/16. We discussed the project and it is our understanding that we will move forward with our project at this time and PennDOT will address their project at the time it moves forward. We have relocated some landscaping to be out of the future location of PennDOT potential improvements.

Fire Rescue Department Review Letter dated 21 June 2016

1a. There are fire hydrants spaced within 300 feet of all sides of all proposed buildings.

1b. We have showed fire department connections and a hydrant is within 100 feet of all.

1c. Confirmed.

2. We have created a fire truck circulation plan for your review.

3. We have added fire lanes to the plans.

Bucks County Planning Commission Review Letter dated 5 July 2016

COMMENTS

1. The owners and Langan met with PennDOT and their engineers on 7/25/16. We discussed the project and it is our understanding that we will move forward with our project at this time and PennDOT will address their project at the time it moves forward. We have relocated some landscaping to be out of the future location of PennDOT potential improvements.

2. We have revised the plan to eliminate all the parking spaces adjacent to the main northwest-southeast driveway. We have also provided crosswalks and signage.

   We have realigned the access drive at the northwestern corner of Retail B to be aligned with the opposite parking aisle. We have also added stop signs at the existing parking aisles near the driveways for the new buildings

3. We have shown the designated loading areas for the buildings.

4. We have incorporated some landscaping around the perimeter of the building and we would request a waiver for this requirement.

5. Upon final approval of the plans, we will provide a detailed operation and maintenance agreement of the stormwater management system.

6. We have begun the sewage facilities planning module process.

We respectfully request that your office begin the review of the enclosed application package. If you or any of your professionals should have any questions or require additional information, please do not hesitate to contact me directly at (215) 446-2929.

Sincerely,
Langan Engineering and Environmental Services, Inc.

Brian M. Conlon, P.E., LEED AP, SCDP
Senior Associate / Vice President

cc: Maurice Zekaria, Paramount
David Levy, Paramount
Thomas Hecker, Begley, Carlin, & Mandio