BENSALEM TOWNSHIP

Building and Planning Department
2400 Byberry Road • Bensalem PA 19020
215-633-3644 • FAX 215-633-3653

Exhibit Z-4

Zoning Hearing Board

Appeal Number: _____

Township of Bensalem, Bucks County, Pennsylvania
Notice of Appeal

Appeal is hereby made by the undersigned from the action of the Zoning Officer.

Check applicable item(s):

- ☐ Certification of Non-Conforming Use
- ☐ Application for Validity Challenge
- ☐ Administrative Officer in refusing my application for a building permit dated: _____
- ☐ Special Exception
- ☒ Variance from the terms of the Zoning Ordinance of the Township of Bensalem

Appellant Name: Geronimo Motorcycles, LLC

Address: 1235 Gradyville Road, Gradyville, PA 19039

Phone No. _____

Owner's Name: Winkal Holdings, L.L.C.

Address: 10 Rye Ridge Plaza, Suite 200
Rye Brook, NY 10573

Phone No. _____

Attorney Name: Nathan D. Fox

Address: 680 Middletown Blvd
Langhorne, PA 19047

Phone No. _____

Interest of appellant, if not owners (agent, lessee, etc.): lessee pursuant to a lease agreement between Winkal Holdings, L.L.C., as landlord and Geronimo Motorcycles, LLC as tenant dated March 27, 2015

1. **Application relates to the following:**

Check items if applicable:

☐	**Use**	☐	**Lot Area**
☐	**Height**	☐	**Yards**
☐	**Existing Building**	☐	**Proposed Building**
☐	**Occupancy**		
☒	**Other:** (describe)	square footage of freestanding sign	

2. **Brief description of Real Estate affected:**

Tax Parcel Number: 02 001034-001

Location: 3153 Lincoln Highway, Trevose, PA 19053

Lot Size: 1.4125 acres

Present Use: Vacant building

Proposed Use: Sales and service of Indian brand motorcyles

Present Zoning Classification: HC-1

Present Improvement upon Land: Vacant single-story brick building

Deed recorded at Doylestown in Deed Book 1920 Page 842

3. If this is an appeal to challenge, provide statement and/or basis for challenge to the validity of the zoning ordinance.

N/A

4. If this is an Appeal from action of the Zoning Administrative Officer then complete the following:

Date Determination was made: February 19, 2015

Your statement of alleged error of Zoning Administrative Office:

See attached Exhibit 1, Item 4

5. Specific reference to section of the Zoning Ordinance upon which application for special exception or variance is based (if special or variance is desired):

See attached Exhibit 1, Item 5

6. Action desired by appellant or applicant (statement of relief sought or special exception or variance desired):

Variance permitting installation of two (2) signage panels, each of 77.73 square feet, upon the existing free-standing pole sign on the property

7. Reasons appellant believes board should approve desired action (refer to section or sections of ordinance under which it is felt that desired action may be allowed, and not whether hardship is (or is not) claimed, and the specific hardship.

See attached Exhibit 1, Item 7

8. Has previous appeal or application for special exception or variance been filed in connection with these premises?

☐ YES ☒ NO See attached Exhibit 1, Item 8

Specifications of errors must state separately the appellant's objections to the action of the zoning administrative office with respect to each question of law and fact which is sought to be reviewed.

I, hereby depose and say that all of the above statements and the statements contained in any papers or plans submitted herewith, are true to the best of my knowledge and belief.

May 13, 2015
Date

Sworn to and subscribed before me this

13th day of May 20 15

Notary Publ

My commis

COMMONWEALTH OF PENNSYLVANIA
NOTARIAL SEAL
Paula L. Tanksley-Bradley, Notary Public
Radnor Twp., Delaware County
My Commission Expires Nov. 18, 2018
MEMBER, PENNSYLVANIA ASSOCIATION OF NOTARIES

Exhibit 1

Item 4: The zoning application should have been granted by the Zoning Officer under § 232-581 pertaining to existing non-conformities. The sign at issue is an existing pylon sign with greater than 40-square feet per side, and has 100 square feet on one side (the other side is currently blank). The Appellant proposes 77.73 square feet per side. Generally, non-conformities may be expanded up to 50% by right under § 232-581 and this sign is an existing non-conformity. § 232-720 discussing status of existing signs is silent as to free-standing signs and only references signs erected on buildings or structures. Therefore, a free standing sign should have the same status and permissible expansion as an otherwise existing non-conformity.

Item 5: § 232-716(2)d.1 to allow greater than 40-square feet per side on an existing freestanding pylon sign.

Item 7: The Appellant is entitled to the variance and relief requested. There are unique physical characteristics of the existing property including its location and proximity to major roadways and other commercial uses, and the Appellant requires the increased signage size for visibility to allow customers to safely see from a distance where the facility is located. The Appellant requires the variance for the reasonable use of the property as an Indian Motorcycle dealership. Any unnecessary hardship has not been created by the Appellant. The variance requested, if authorized, will in no way alter the essential character of the neighborhood or district where the property is located. The variance, if authorized, represents the minimum variance that will afford relief and will represent the least possible modification of the regulation at issue.

Item 8: To Appellant's knowledge, no appeal or application for special exception or variance has been filed in connection with the premises. This is the first appeal and application for variance submitted by appellant with respect to the premises.

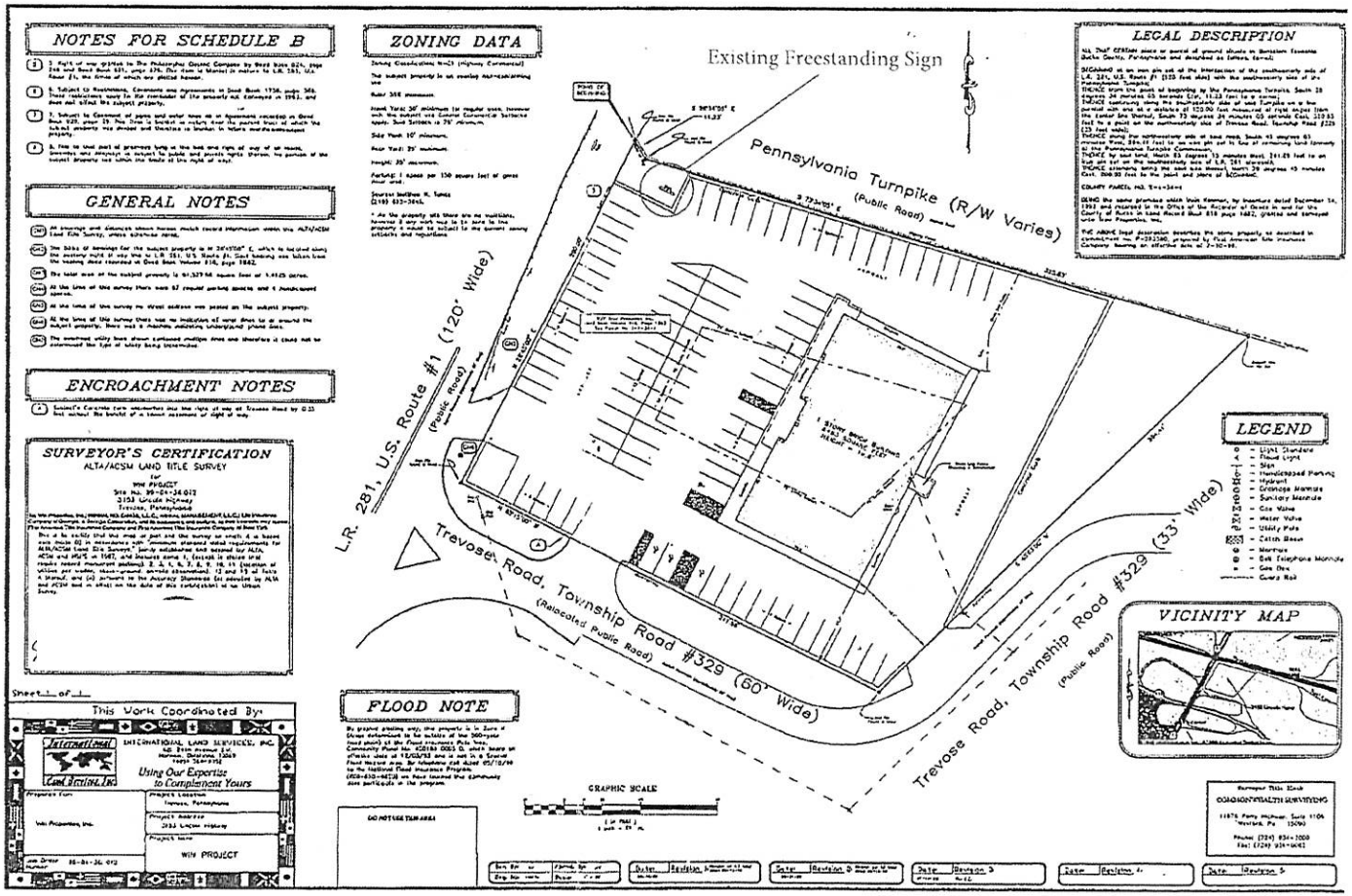
NOTES FOR SCHEDULE B
GENERAL NOTES
ENCROACHMENT NOTES
SURVEYOR'S CERTIFICATION
ALTA/ACSM LAND TITLE SURVEY
ZONING DATA
Existing Freestanding Sign
LEGAL DESCRIPTION
Pennsylvania Turnpike (R/W Varies)
(Public Road)
L.R. 281, U.S. Route #1 (120' Wide)
Trevose Road, Township Road #329 (60' Wide)
(Relocated Public Road)
Trevose Road, Township Road #329 (33' Wide)
(Public Road)
LEGEND
VICINITY MAP
FLOOD NOTE
GRAPHIC SCALE
This Work Coordinated By:
INTERNATIONAL LAND SERVICES, INC.
Using Our Expertise to Complement Yours
WIN PROJECT

PLOT PLAN

BENSALEM TOWNSHIP

Building and Planning Department
Office 215-633-3644 • Fax 215-633-3753
Matthew K. Takita
Director of Building and Planning
2400 Byberry Road • Bensalem, PA 19020

ZONING CERTIFICATION

February 19, 2015

Mr. Hardi Beloff
1235 Gradyville Rd
Gradyville, PA 19039

Project:	MOTORCYCLE SALES & SERVICE
Project Address:	3153 Lincoln Highway Trevose, PA 19053
Tax Parcel:	02-001-034-001
Property Owner:	Winkal Holdings, L.L.C.

Dear Sir/Madam:

In response to your request, the following information is being furnished as it pertains to the above referenced property:

- **The subject parcel is located in an HC-1, Highway Commercial District.**
- **The proposed motorcycle sales and service use is permitted in the HC-1 district.**
- **The proposed 77.73 sf per side freestanding sign exceeds the allowable 40 sf per side. [Section 232-716(2)d.1]**
- **The plans proposes 3 facia signs – Only 1 sign is permitted on each street frontage. [Section 232-716(2)c.2]**

A copy of the section for this classification is included for your reference. If you should have any questions or concerns, please feel free to contact this office for assistance.

You have the right to appeal this determination to the Township Zoning Hearing Board. Applications for appeals to the Zoning Hearing Board can be obtained at the Building and Planning Department located in the Municipal Building at 2400 Byberry Road, Bensalem or on our website at http://bensalempa.gov.

Respectfully,

Harold W. Gans, P.E., P.L.S.
Township Engineer

Email address

HWG/lva

This is not a permit. No land shall be used or occupied and no structure shall be constructed, used or occupied until all appropriate approvals and permits are obtained.

TAX MAP

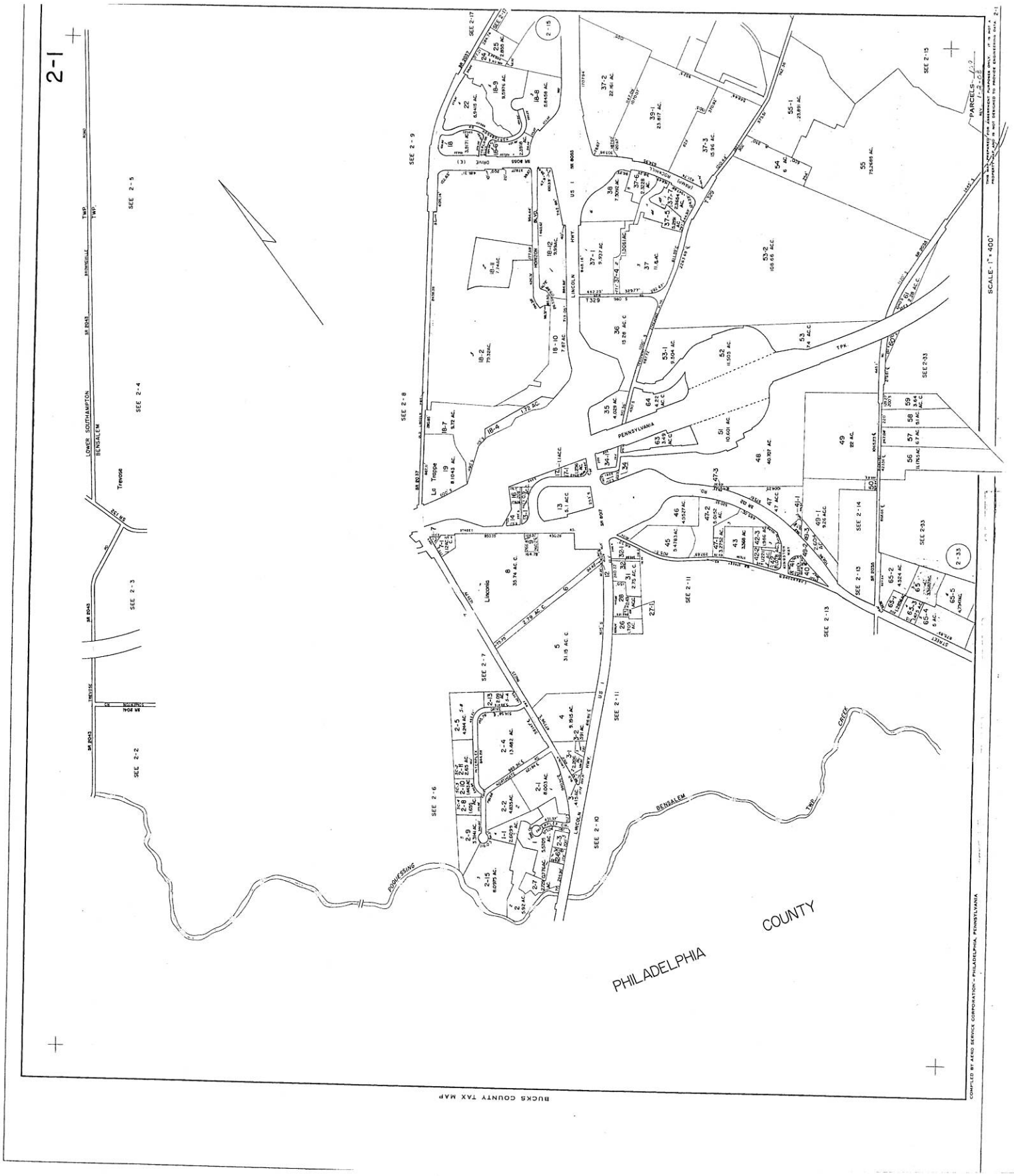
2-1
PHILADELPHIA COUNTY
BUCKS COUNTY TAX MAP
SCALE - 1" = 400'
PARCELS
LOWER SOUTHAMPTON
BENSALEM
Trevose
La Trappe
Lincoln
PENNSYLVANIA
LINCOLN HWY.
US 1
POQUESSING
BENSALEM TWP.
CREEK
COMPILED BY AERO SERVICE CORPORATION - PHILADELPHIA, PENNSYLVANIA

D1 **FACE ELEVATION** | 77.73 SF
1/2" = 1'-0"

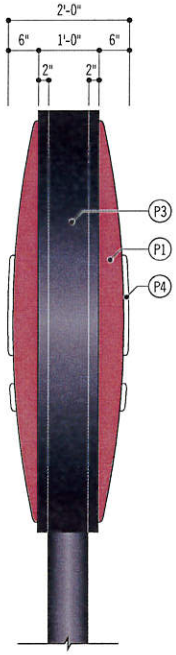

D1 **SIDE VIEW**
1/2" = 1'-0"

INTERNALLY ILLUMINATED PYLON SIGN (DF)
Faces are 6" deep, 3/16" pan formed Lexan, painted Red (to match PMS 202 C) & White.
Cabinet & retainer are painted Black. Sign is internally illuminated with HO fluorescent lamps.
Steel pole & pipe stub to be provided by installer.

See page 2.1 for details.

P1 **PAINT**
Red, AkzoNobel
(to match PMS 202 C)

P3 **PAINT**
Black, AkzoNobel

P4 **PAINT**
White, AkzoNobel

SignArt
6225 Old Concord Road
Charlotte, NC 28213
P: 704.597.9801
F: 704.597.9808
www.signartsign.com

PROJECT NUMBER
86944
CLIENT
Indian Motorcycle

LOCATION
Various

SALESPERSON
BS
ISSUE DATE
03.13.13
REVISIONS
-

DESIGNER
CS
FILE PATH
Indian/2013/86944

APPROVED FOR PRODUCTION
☐ Approved As Drawn
☐ Approved As Noted
☐ Revise & Resubmit
Date: _____
Client: _____
Sales: _____
PM: _____

NOTICE
ALL SIGNS MANUFACTURED FOR 120V ELECTRICAL SERVICE UNLESS OTHERWISE NOTED

© 2013 SignArt. All Rights Reserved. This drawing and the designs, plans, layouts and accompanying information contained herein, are the sole property of SignArt and may not be copied, recreated or distributed without the express written consent of SignArt.

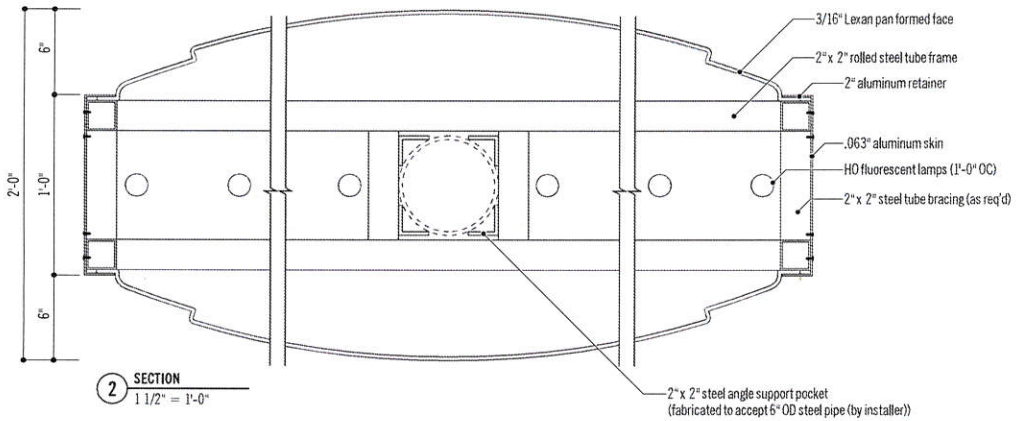

2 **SECTION**
1 1/2" = 1'-0"

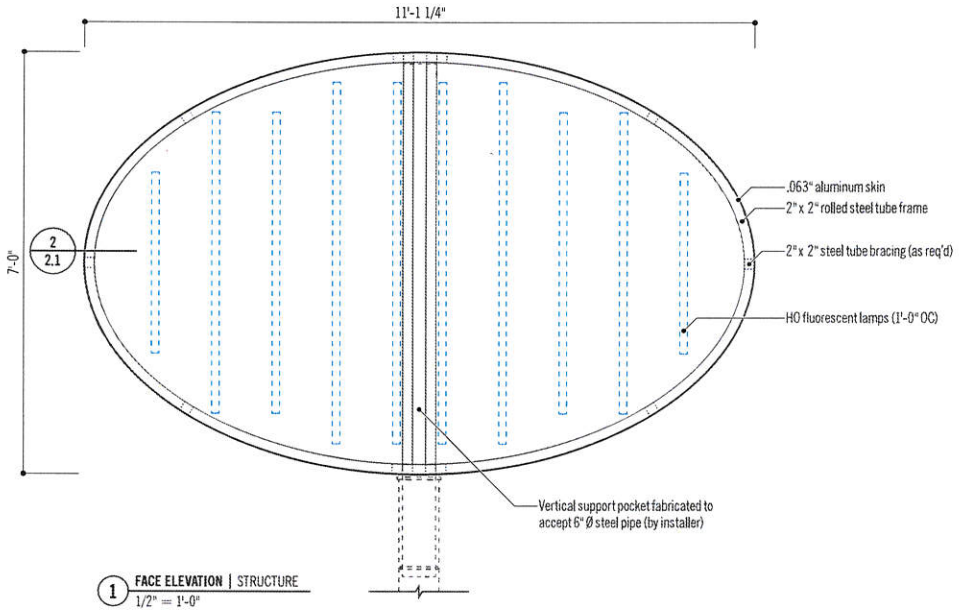

1 **FACE ELEVATION** | STRUCTURE
1/2" = 1'-0"

INDIAN MOTORCYCLE | SIGN D1

SignArt
6225 Old Concord Road
Charlotte, NC 28213
P: 704.597.9801
F: 704.597.9808
www.signartsign.com

PROJECT NUMBER
86944
CLIENT
Indian Motorcycle

LOCATION
Various

SALESPERSON
BS
ISSUE DATE
03.13.13
REVISIONS
-

DESIGNER
CS
FILE PATH
Indian/2013/86944

APPROVED FOR PRODUCTION
☐ Approved As Drawn
☐ Approved As Noted
☐ Revise & Resubmit
Date: _____
Client: _____
Sales: _____
PM: _____

NOTICE
ALL SIGNS MANUFACTURED FOR 120V ELECTRICAL SERVICE UNLESS OTHERWISE NOTED

© 2013 SignArt. All Rights Reserved. This drawing and the designs, plans, layouts and accompanying information contained herein, are the sole property of SignArt and may not be copied, recreated or distributed without the express written consent of SignArt.