BENSALEM TOWNSHIP

Building and Planning Department
2400 Byberry Road • Bensalem PA 19020
215-633-3644 • FAX 215-633-3653

Exhibit Z-4

Zoning Hearing Board

Appeal Number: _____

Township of Bensalem, Bucks County, Pennsylvania
Notice of Appeal

Appeal is hereby made by the undersigned from the action of the Zoning Officer.

Check applicable item(s):

- ☐ Certification of Non-Conforming Use
- ☐ Application for Validity Challenge
- ☐ Administrative Officer in refusing my application for a building permit dated: _____
- ☐ Special Exception
- ☒ Variance from the terms of the Zoning Ordinance of the Township of Bensalem

Appellant Name: Alex and Dez Tkach

Address: 6379 Sterling Avenue
Bensalem, PA 19020

Phone No. [redacted]

Owner's Name: Ilva Sivchuk

Address: 920 Old Dolington Road
Newtown, PA 18940

Phone No. _____

Attorney Name: Charles O. Marte, Jr.

Address: 344 S. Bellevue Avenue
Langhorne, PA 19047

Phone No. [redacted]

Interest of appellant, if not owners (agent, lessee, etc.): _____

1. Application relates to the following:

Check items if applicable:

- ☐ **Use**
- ☐ **Lot Area**
- ☐ **Height**
- ☐ **Yards**
- ☐ **Existing Building**
- ☐ **Proposed Building**
- ☐ **Occupancy**
- ☒ **Other:** (describe) Variance from Section 232-58 to permit an in-ground swimming pool to be constructed in a floodplain

2. Brief description of Real Estate affected:

Tax Parcel Number: 2-56-91 thru 104 inclusive

Location: 6379 Sterling Avenue, Bensalem, PA

Lot Size: 100' x 150'

Present Use: Single Family Residence

Proposed Use: Single Family Residence with a pool

Present Zoning Classification: R-1 Residential

Present Improvement upon Land: Single Family Residence

Deed recorded at Doylestown in Deed Book 486 Page 1761
Instrument Nos. 2013025183 and 2013041008

3. If this is an appeal to challenge, provide statement and/or basis for challenge to the validity of the zoning ordinance.

N/A

4. If this is an Appeal from action of the Zoning Administrative Officer then complete the following:

Date Determination was made: N/A

Your statement of alleged error of Zoning Administrative Office:

N/A

5. Specific reference to section of the Zoning Ordinance upon which application for special exception or variance is based (if special or variance is desired):

§232-58

6. Action desired by appellant or applicant (statement of relief sought or special exception or variance desired):

Variance to permit an in-ground swimming pool to be constructed partially in a floodplain

7. Reasons appellant believes board should approve desired action (refer to section or sections of ordinance under which it is felt that desired action may be allowed, and not whether hardship is (or is not) claimed, and the specific hardship.

Pool will be anchored to prevent buoyancy with poured reinforced concrete walls around the pool and waterproofing to prevent infiltration.

8. Has previous appeal or application for special exception or variance been filed in connection with these premises?

☐ YES ☒ NO

Specifications of errors must state separately the appellant's objections to the action of the zoning administrative office with respect to each question of law and fact which is sought to be reviewed.

I, hereby depose and say that all of the above statements and the statements contained in any papers or plans submitted herewith are true to the best of my knowledge and belief.

[redacted]

March 10, 2014

Appellant's or Owner's Signature — Date

Sworn to and subscribed before me this

10th day of March 2014

Notary Public

My commission expires: 12/4/16

COMMONWEALTH OF PENNSYLVANIA
NOTARIAL SEAL
JOVITA DAVIS, Notary Public
City of Philadelphia, Phila. County
My Commission Expires December 4, 2016

[redacted]

BENSALEM TOWNSHIP

Building and Planning Department
Office 215-633-3644 • Fax 215-633-3753
Matthew K. Takita
Director of Building and Planning
2400 Byberry Road • Bensalem, PA 19020

August 8, 2013

Ilva Sivchuck
6379 Sterling Ave
Bensalem, PA 19020

Project:	INGROUND POOL
Project Address:	6379 Sterling Ave Bensalem, PA 19020
Tax Parcel:	02-056-091
Property Owner:	Same as addressed
Permit Status:	Application Denied

Electronic Review Status

Dear Sir/Madam:

A review was conducted on the application for the referenced project pursuant to Chapter 232 ZONING, **[Section 232-58]**. The attached sheets show what was found during the review and this information is required to complete the permit application for the above referenced project.

The review process utilizes Adobe Acrobat allowing reviewers to make their comments directly on the plan pages. These comments are tracked throughout the review and a printed summary serves as the basis for a rejection on the project until required changes have been made. The attached sheets will show an image of the plan page including its associated comments with connector lines. Only those pages of the plans that require a revision have been generated and included.

You are required to resubmit plans with revisions and will need to burn the **complete** set of plans with revisions to a new disc. Return it to the Building & Planning Department. You are to include a summary list of **all** changes that were made to the plans including those required by the Township. For each change made to the plans, note the sheet number, drawing title, and a brief description of the change made. Please label the disc with the project address, date and revision number to distinguish it from any earlier submissions.

It is our intent that you receive as few rejections as possible and provide reviewers a more efficient method for completing the review by utilizing the comments summary. The print dialog box should include the following summary options:

- Layout - Document and comments with connector lines on single pages
- Font Size - Large font size
- Include - all comments
- **Clear** - the checkbox to NOT include pages containing no comments

It is possible that upon receipt of the revised plans, additional items for compliance may be required. This letter shall serve as formal notice that your permit application has been rejected for said project until such time as the requested information has been provided.

You have the right to appeal this rejection letter. Applications for the Zoning Hearing Board can be obtained from the Building and Planning Department located in the Municipal Building at 2400 Byberry Road, Bensalem.

Respectfully,

[redacted]

Harold W. Gans, P.E., P.L.S.
Township Engineer

[redacted]
Email address

HWG/Iva
Enclosures

Summary of Comments on COMBINED.pdf

Page: 1

Number: 1 Author: rgans Subject: ZONING REJECTION Date: 8/8/2013 2:36:29 PM

Number: 2 Author: rgans Subject: Text Box Date: 8/8/2013 2:39:22 PM

The proposed pool is located within the 100 year floodplain which is not prohibited.
[Section 232-58]

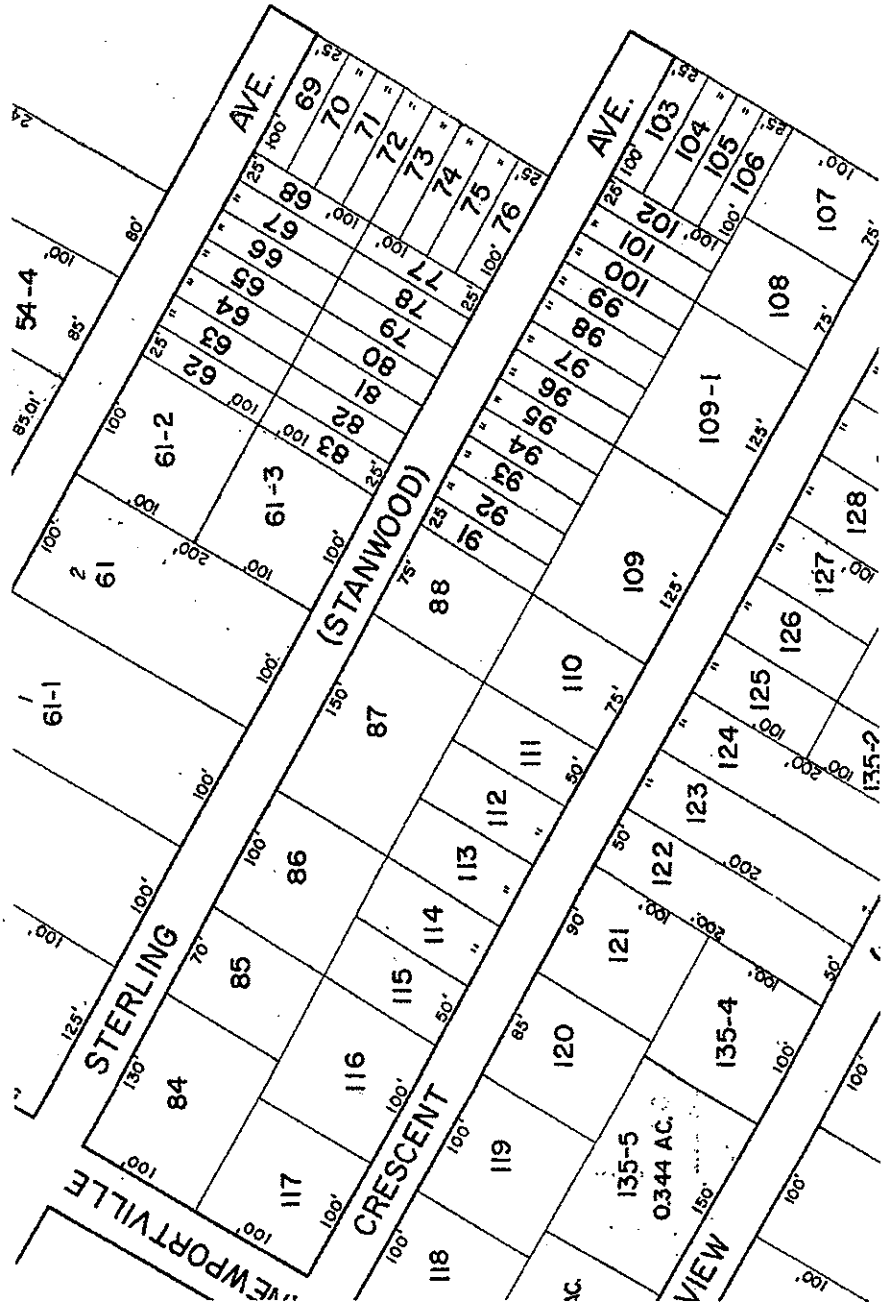

TAX MAP PARCEL 2-56-91

TAX MAP PARCEL 2-56-91.pdf
1 of 1

Open with

ILVA SIVCHUK
920 Old Dolington Road
Newtown, Pennsylvania 18954

February 12, 2014

Bensalem Township Zoning Hearing Board
2400 Byberry Road
Bensalem, PA 19020

RE: Zoning Hearing Board Application of Alex and Dez Tkach
Premises: 6379 Sterling Avenue
Bensalem, PA 19020
Tax Map Parcels No. 2-56-91, 92, 93, 97, 98, 99, 100, 103 & 104

Dear Zoning Hearing Board Members,

I am the owner of the property at 6379 Sterling Avenue. I currently am leasing the property to Alex and Dez Tkach under the terms of a Lease Purchase Agreement between us. I know that Mr. and Mrs. Tkach want to install a swimming pool at the premises and that they will need a variance in order to install the swimming pool.

This letter is to signify that they have my full permission and authority to request a variance to build a swimming pool in the floodplain at the above captioned property. They will become the owners of this property in the not too distant future and the pool will be installed at their sole cost and expense. Please let this letter serve as authorization from me for them to request this variance.

Thank you for your consideration in this matter.

Very truly yours [redacted]

Ilva Sivchuk

Sworn to and subscribed
before me this day
[redacted]4

COMMONWEALTH OF PENNSYLVANIA
NOTARIAL SEAL
JOVITA DAVIS, Notary Public
City of Philadelphia, Phila. County
My Commission Expires December 4, 2016

cc: Alex and Dez Tkach
Charles O. Marte, Jr., Esquire

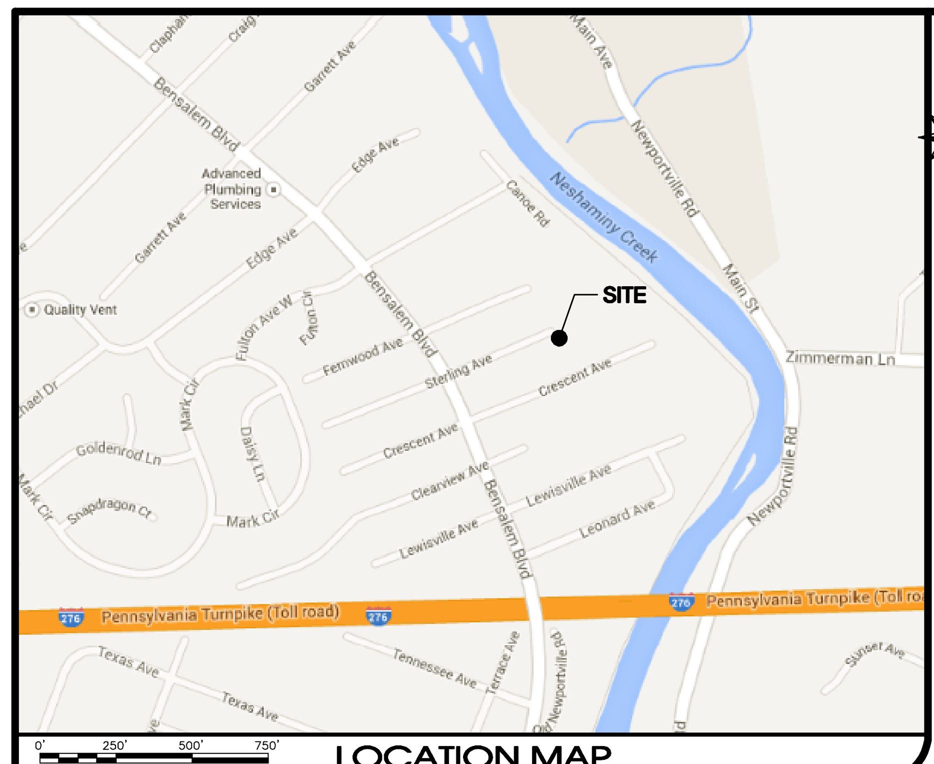

LOCATION MAP

EROSION and SEDIMENTATION CONTROL

I. GENERAL NOTES:

1. All earth disturbance activities shall proceed in accordance with the following construction sequence. each stage shall be completed before any following stage is initiated. Clearing and grubbing shall be limited to those areas described in each stage.
2. At least 7 days before starting any earth disturbance activities, the operator shall invite all contractors involved in those activities, the landowner, all appropriate municipal officials, the erosion and sediment control plan preparer, and the Bucks County Conservation District to an on-site, preconstruction meeting.
3. At least 3 days before starting any earth disturbance activities, all contractors involved in those activities shall notify the Pennsylvania One Call System, Inc. (1-800-242-1776) for locations of all buried utilities within the permitted area.
4. All structures associated with the construction of sediment removal facilities must be in placeand functional prior to any earth disturbance within the tributary area.
5. If at any time prior to stabilization any E&S problems occur which require additional measures, immediate action must be taken to correct the problem.
6. The Bucks County Conservation District must be notified at least three days prior to any earth disturbance activity.
7. This Erosion and Sedimentation Control Plan was prepared by the staff of Woodrow & Associates, Inc. under the direction of Mr. Timothy P. Woodrow, P.E.
8. Any sediment removed from the BMP's may be used in landscaped areas stablized with a temporary seed and mulch applied at the recommended rates.
9. The Sedimentation Basin shall be structurally sound.

II. RECEIVING WATERSHED:

Stormwater run-off from this site enters Rock Run Creek a tributary to Martins Creek which has a chapter 93 designation of WWF, as published in Title 25. Environemental Resources.

III. INTENT OF CONSERVATION PROGRAM:

The intent of this program is to prevent accelerated erosion of the exposed Site soils during the construction and permanent life periods of the Development. The program requires retention of all sediments on the construction site while minimizing the impact of development on existing streams and adjacent properties.

These objectives will be achieved by minimizing exposure time of potentially erosive soils to runoff and installation of the temporary and permanent conservation practices in proper sequence with construction. The intent of this program should be understood and implemented throughout the entire development. The various construction trades should be appraised of this program and directed to prevent undue disturbance of prepared and protected surfaces.

IV. SURFACE STABILIZATION CRITERIA:

All denuded soil surfaces including soil stockpiles that are subject to erosion shall be stabilized either temporarily or permanently immediately. Crushed stone on pavement subgrades is considered adequate protection. Disturbed areas which are not at finished grade and which will be redisturbed within one (1) year may be stabilized with a quick growing, temporary seeding mixture and mulch. During non-germination periods, mulch shall be applied at recommended rates. Germination period shall be from April 1st to June 15th and August 15th to October 15th, during non-germination periods mulched areas shall be limed, fertilized, seeded and remulched.

Contractor/Applicant shall assume responsibility for the maintenance and operation of all erosion and sediment control facilities.

Erosion and sediment control measures must be constructed, stabilized and functional prior to any site disturbance within the tributary area.

Silt fence must be installed parallel to existing contours and constructed in level alignments. The ends of the fence must be extended a minimum of eight (8) feet up slope and at forty-five (45) degrees to the main fence alignment.

If any of the measures contained within this plan prove inadequate of removing sediment from flows prior to discharge of stabilizing of the surfaces involved, additional measures must be immediately implemented by the Contractor/Applicant to eliminate all such problems. Said measures shall be approved by the local soil conservation district.

Until the site is adequately stabilized, all erosion and sediment control measures must remain in place and functional. Maintenance must include inspection of all erosion and sediment control measures after each runoff event and on a weekly basis. All preventative and remedial maintenance work including clean-out, repair, replacement, regrading, reseeding, remulching and renetting must be performed immediately.

After final site stabilization has been achieved, temporary erosion and sediment control measures must be removed. Areas disturbed during removal of the controls must be stabilized immediately.

A reserve supply of crushed stone, silt fence, temporary seed and hay bales shall be maintained on site for emergency replacement of any failing erosion and sediment control measures.

V. EROSION CONTROL DEVICES / MAINTENANCE PROGRAM:

STABILIZED CONSTRUCTION ENTRANCE:
Entrances are to be constructed per Ch. 102 Standard Construction Detail #16 and the details provided with this plan set. The stabilized construction entrance(s) shall be maintained so that tire scrubbing activity does not become ineffective. Any buildup of mud or soil on the street shall be cleaned at the end of each working day by hand or mechanical sweeping.

SILT FENCES:
Silt fence shall be installed per Ch. 102 Standard Construction Details #19-22 the construction details provided, with rock outlets at existing and graded low points. Sediment shall be removed from silt fences when it reaches 1/2 the fence height or as directed by the local soil conservation district. Silt fencing which has been undermined or over topped shall be replaced with rock filter outlets immediately.

SEDIMENT TRAPS:
Sediment Traps shall be constructed per Ch. 102 Standard Construction Details #11-13 and the details provided with this plan set. Clean-out stakes shall be placed near the center of each trap. Accumulated sediment shall be removed when it reaches the clean-out elevation marked on the stake.

SEDIMENT BASINS:
Sediment Basins shall be constructed per Ch. 102 Standard Construction Details #1-10 and the details provided with this plan set. Clean-out stakes shall be placed half the distance from points of concentrated flow entering the basin to the riser. Accumulated sediment shall be removed when it reaches the clean-out elevation marked on the stake.

STORM INLET PROTECTION:
Inlet protection devices shall be constructed per Ch. 102 Standard Construction Details #28-32 and the details provided with this plan set. Inlet protection shall be mainteined until all earthwork within the tributary drainage area has been completely stabilized.

SEDIMENT DISPOSAL:
Silt removed from temporary erosion and sediment control devices shall be disposed of on-site in landscaped areas located outside the 100 year flood plains, wetlands, steep slopes and drainage swales. Areas of sediment disposal shall be considered a critical vegetation area requiring immediate stablization.

Each drainage sub-area will require separate and unique erosion and sediment control measures. The contractor shall follow the specific construction sequence deemed appropriate by the local soil conservation district.

All BMP shown above require inspection weekly and after each runoff event. All required repairs and or replacement of BMP's must be done immediately.

VI. UTILITY TRENCH EXCAVATION:

GENERAL REQUIREMENTS:
Exposed trench excavations have high potential for accelerated erosion and sediment pollution. Since these excavations are usually located at lower elevations along or across earth disturbance sites, open trenches serve to concentrate sediment laden runoff and convey it to site boundaries or waterways. The most important erosion and sediment pollution control consideration for trench construction is the limiting and specific scheduling of work activities.

CONSTRUCTION REQUIREMENTS:
Limit advance clearing and grubbing operations to a distance equal to two times the length of pipe installation that can be completed in one day.

Work crews and equipment for trenching, placement of pipe, plug construction and backfilling will be self contained and separate from clearing and work crews and site restoration and stabilization operations.

Limit daily trench excavation to the length of pipe placement, plug installation and backfilling that can be completed the same day.

Water which accumulates in the open trench will be completely removed by pumping in accordance with item b.5 of section m, before pipe placement and/or backfilling begins.

On the day following pipe placement and trench backfilling, the disturbed area will be graded to final contours and appropriate temporary erosion and sediment pollution control measures/facilities will be installed. seeding and mulching of all disturbed areas will be done at the end of each week.

EXCEPTIONS:
In certain cases trenches cannot be backfilled until the pipe is hydrostatically tested, or anchors and other permanent features are installed. In these cases, all with the following exceptions:

a. Daily backfilling of the trench may be delayed for six (6) days. All pressure testing and the complete backfilling of the open trench must be completed by the seventh working day.

b. If daily backfilling is delayed, the disturbed area will be graded to final contours appropriate temporary erosion and sediment control measures / facilities will be installed, and the areas seeded and mulched within the next two calander days.

VII. FERTILIZATION, SEEDING AND MULCHING:

TEMPORARY COVER ON DISTURBED AREAS:
Disturbed areas not at finished grade which will be redisturbed within one (1) year may be seeded and mulched with a temporary seed cover.

PERMANENT COVER ON DISTURBED AREAS:
Disturbed areas which are either at finish grade or will not be redisturbed within one (1) year period must be seeded and mulched with a permanent seed mixture.

All disturbed area shall be stabilized immediately with a temporary seed and mulch mixture applied at the recommended rates. Site preparation of mulch and maintenance shall be performed in accordance with the Penn State University's Erosion Control & Conservation Plantings on Noncropland manual and Pennsylvania Department of Transportation publication form 408 specifications (latest edition). During nongermination periods, mulch must be applied at the recommended rates.

VIII. SEEDING SCHEDULE:

TEMPORARY SEEDING SPECIFICATION - FORMULA E:
ANNUAL RYE GRASS (LAWN MULTIFLORUM)

PERMANENT SEEDING SPECIFICATION - FORMULA D:
70% Fescue, Kentucky 31, tall (Festuca Arunoinacea var., Kentucky 31)
20% Fescue Pennlawn Red (Festuca Rubra var., Pennlawn)
10% Weeping Alkali Grass (Fults' Puccinellia Distans)

SEEDING RATES FOR THE ABOVE MIXTURES:
Hay or straw mulch shall be applied at the rates of at three (3) tons per acre and at least four (4) tons per acre during winter months (Dec. 01 to Mar. 01) due to cold weather soil erosion problems.

Pulverized agricultural limestone and commercial fertilizer shall be applied to all disturbed areas which are to be seeded except for temporary seed areas at the following rates:

Pulverized agricultural limestone = 2 tons/acre (permanent use)
= 1 ton/acre (temporary use)

10-20-20 analysis commercial fertilizer = 100 lbs/acre
5- 5- 5 analysis commercial fertilizer = 100 lbs/acre

Seeded areas that washout must be filled and regraded as necessary and then processed. Some type of anchoring method should then be used to hold seed and mulch in place. This is especially important around water courses, in swales, and areas of concentrated flow on slopes.

IX. RECYCLING and DISPOSAL METHODS:

The contractor shall follow all Local Ordinances when handeling and disposing of construction trash including any Local Recycling Programs.

IMPORT OR EXPORT OF MATERIAL:

If the site will need to import or export material from the site, the responsibility for the performing environmental due diligence and determination of clean fill will rest with (responsible party).

CLEAN FILL

CLEAN FILL is defined as: Uncontaminated, non-water soluble, non-decomposable inert, solid material. The term includes soil, rock, stone dredged material, used asphalt, and brick, block or concrete from construction and demolition activities that is separate from other waste and is recognized as such. The term does not include materials placed in or on the waters of the Commonwealth unless otherwise authorized. (the term "used asphalt" does not include milled asphalt or asphalt that has been prcoessed for re-use.)

CLEAN FILL AFFECTED BY A SPILL OR RELEASE OF REGULATED SUBSTANCE: Fill materials affected by a spill or release of a regulated substance still qualifies as clean fill provided the testing reveals that the filled material contains concentrations of regulated substances that are below the residential limits in Table FP-1a and FP-1b found in the Department's poilcy "Management of Fill".

Any person placing clean fill that has been affected by a spill or release of a regulated substance must use form FP-001 to certify the origin of the fill material and the results of the analytical testing to qualify the material as clean fill. Form FP-001 must be retained by the property owner receiving the fill. A copy of the FP-001 can be found at the end of these instructions.

ENVIRONMENTAL DUE DILIGENCE: The applicant must perform environmental due diligence to determine if the fill materials associated with the project qualify as clean fill.
Environmental Due Diligence is defined as: Investigation techniques, including, but not limited to, visial property inspections, electronic data base searches, review of property ownership, review of property use history, Sanborn maps, environmental questionnaires, transaction screens, analytical testing, environmental assesments or audits. Analytical testing is not a required part of due diligence unless visual inspection and/or review of the past land use of the property indicates that the fill may have subjected to a spill or release of regulated substance. If the fill may have been affected by a spill or release of a regulated substance, it must be tested to determine if it qualifies as clean fill. Testing should be performed in accordance with Appendix A of the Department's policy "Managemnt of Fill".

Fill material that does not qualify as clean fill is regulated fill. Regulated fill is waste and must be managed in accordance with the department's municipal or residual waste regulations based on 25 PA Code Chapter 287 Residual Waste Management or 271 Municipal Waste Managment, whichever is applicable. These regualtions are available on-line @ www.pacode.com.

X. SOILS RESOLUTIONS:

Winter Grading
Contractor to ensure proper stablization. Methods to include, seeding and mulching at the recommended rates and were necessary the placement of an approved erosion control blanket.

Road Fill
Contractor to ensure all fill used for roadway construction is placed and compacted in appropriate lifts. Should material not be suitable for roadway construction the contractor may import suitable material from an area within the permitted area.

Topsoil
Contractor to ensure proper stablization. Methods to include, seeding and mulching at the recommended rates and were necessary the placement of an approved erosion control blanket.

Contractor shall consider soils testing to ensure topsoil is suitable to produce and sustain proper growth. Should the topsoil be lacking of the nutrients to produce growth the contractor shall consider applying lime and/or fertilizers at the rates recommended by the project landscape consultant and/or B.C.C.D..

Topsoil may be imported from an area within the permitted area proven to be suitable.

Ponds, Dikes and Levees Embankments
Contractor to ensure all fill used for basin embankment construction is placed and compacted in appropriate lifts. Should material not be suitable for basin construction the contractor may import suitable material from an area within the permitted area.

Contractor to ensure proper stablization. Methods to include, seeding and mulching at the recommended rates and were necessary the placement of an approved erosion control blanket.

Terraces, diversions and waterways
Contractor to ensure all earthwork associated with swales, diversion berms and/or watercourses is adequately stabilized with an approved erosion and sediment control blankets and/or seeding and mulching applied at the recommended rates.

Should erosion continue the contractor shall consult the design engineer, the B.C.C.D. and take appropriate measures to correct the problems. Corrective measure may include but are not limited to the following:

Additional seeding and mulching, the placement of sod, armoring the channel with a stronger stabilization blanket, or the placement of rip-rap.

Season Highwater Table
Appropriate earthwork construction techniques, including importing suitable soils and utilizing local sumps and pumps (to approved sediment removal facilities) to keep excavations dry, as recommended by a qualified geotechnical engineer, should be implemented if seasonal high water table soil limitations are encountered. The Bucks County Conservation District shall be consulted if such limitations are encountered.

EROSION / SEDIMENT CONTROL PLAN STANDARD NOTES

1. 102.2(a): This chapter requires persons proposing or conducting earth disturbance activities to develop, implement and maintain BMPs to minimize the potential for accelerated erosion and sedimentation.
2. Stockpile heights must not exceed 35 feet. Stockpile slopes must be 2:1 or flatter.
3. The operator/resposible person (O/RP) on site shall assure that the approved erosion and sediment control plan is properly and completely implemented.
4. Immediately upon discovering unforeseen circumstances posing the potential for accelerated erosion and/or sediment pollution, the O/RP shall implement appropriate Best Management Practices (BMPs) to eliminate potential for accelerated erosion and/or sediment pollution.
5. The O/RP shall assure that an erosion and sediment control plan has been prepared, approved by the local Conservation District, and is being implemented and maintained for all soil and/or rock spoil and borrow areas, regardless of their locations.
6. All pumping of sediment-laden water shall be through a sediment control BMP, such as pumped water filter bag discharging over undisturbed areas.
7. A copy of the approved erosion and sediment control plan must be available on the project site at all times.
8. Erosion and sediment BMP's must be constructed, stabilized and functional before site disturbance begins within the tributary areas of those BMP's.
9. After final site stabilization has been achieved, temporary erosion and sediment BMP controls must be removed. Areas disturbed during removal of the BMPs must be stabilized immediately.
10. At least (7) days before starting any earth disturbance activity, the O/RP shall invite all contractors involved in that activity, the landowner, all appropriate municipal officials, the erosion and sediment control plan designer and the local Conservation District to a pre-construction meeting. Also, at least 3 days before starting any earth disturbance activity, all contractors involved in that activity shall notify the Pennsylvania One Call System Inc. at 1-800-242-1776 to determine any underground utility locations.
11. Immediately after earth disturbance activities cease, the O/RP shall stabilize any areas disturbed by the activity. During non-germinating periods, mulch must be applied at the specified rates. Disturbed areas which are not at finished grade and which will be redisturbed within one year must be stabilized in accordance with the temporary vegetative stabilization specifications. Disturbed areas which are at finished grade or which will not be redisturbed within one year must be stabilize in accordance with the permanent vegetative stabilization specifications.
12. An area shall be considered to have achieved final stabilization when it has a minimum uniform 70% (percent) vegetative cover or other permanent non-vegetative cover with a density sufficient to resist accelerated surface erosion and subsurface characteristics sufficient to resist sliding and other movements.
13. Upon the installation of temporary sediment basin riser(s), a qualified site representative shall conduct as immediate inspection of the riser(s), whereupon the Conservation District shall be notified in writing that the riser is sealed (watertight).
14. At stream crossing, a 50-foot buffer shall be maintained. On buffers, clearings, sod disturbances and excavations, equipment traffic should be minimized. Activity such as stacking logs, burning cleared brush, discharging rainwater from trenches, welding pipe sections, refueling and maintaining equipment should be avoided within buffer zones.
15. Until a site is stabilized, all erosion and sediment BMP's must be maintained properly. Maintenance must include inspections of all erosion control BMP's after each runoff event and on a weekly basis. All preventative and remedial maintenance work, including cleanout, repair, replacement, re-grading, re-seeding, re-mulching and re-netting must be performed immediately. If erosion and sediment control BMP's fail to perform as expected, replacement BMP's, or modifications of those installed, will be required.
16. Sediment removed from BMP's shall be disposed of on-site in landscape areas outside of steep slopes, wetlands, floodplains or drainage swales and immediately stabilized or placed in soil stockpiles and stabilized.
17. All building materials and wastes must be removed from the site and recycled in accordance with DEP's Solid Waste Regulations (25 PA Code 260.1 et seq., 271.1 et seq., and 287.1 et seq.), and/or any additional local, state or federal regulations. No building materials (used or unused) or waste materials shall be burned, buried, dumped or discharged at the site.

Construction Sequence:

Site Developement operations should be performed in accordance with the following general sequence of operations. The contractor may deviate slightly from the staging of permanent site improvement construction items, however, considerabel deviation from the relative order of erosion and sendiment control measures should not occur without consultation with the Site Engineer and Conservation District.

Should any measure contained within these plans prove incapable of adequately removing sediment from on-site flows prior to discharge and/or stabilizing the surfaces involved, additional measures must be immediately implemented by the operator/resposible person to eliminate any such event.

1. Install stabilized rock construction entrance as shown.
2. Install silt fence on downslope side of lot as shown.
3. Strip and Stockpile Topsoil in designated area as shown.
4. Begin excavation for pool. Remove site spoils and install fiberglass pool.
5. Complete pool construction and utility installation. Finalize rough grading.
6. Install stone and concrete patio. Place topsoil on all disturbed areas. seed disturbed immediately with a permanent seed and mulch applied at the recommended rate.
7. Vegetated areas shall be considered permanently stabilized when a uniform 70% vegetative cover of erosion resistant perennial species have been achieved, or the disturbed area is covered with an acceptable BMP which permanently minimizes accelerated erosion and sedimentation. Until such time as this standard is achieved, interim stabilization measures and temporary erosion and sediment control BMPs that are used to treat project runoff may not be removed.
8. Upon the defined stabilization to each device the contractor shall remove all temporary erosion and sediment control measures. Stabilize all disturbed areas immediately with permanent seed and mulch mixture applied at the recommended rates.

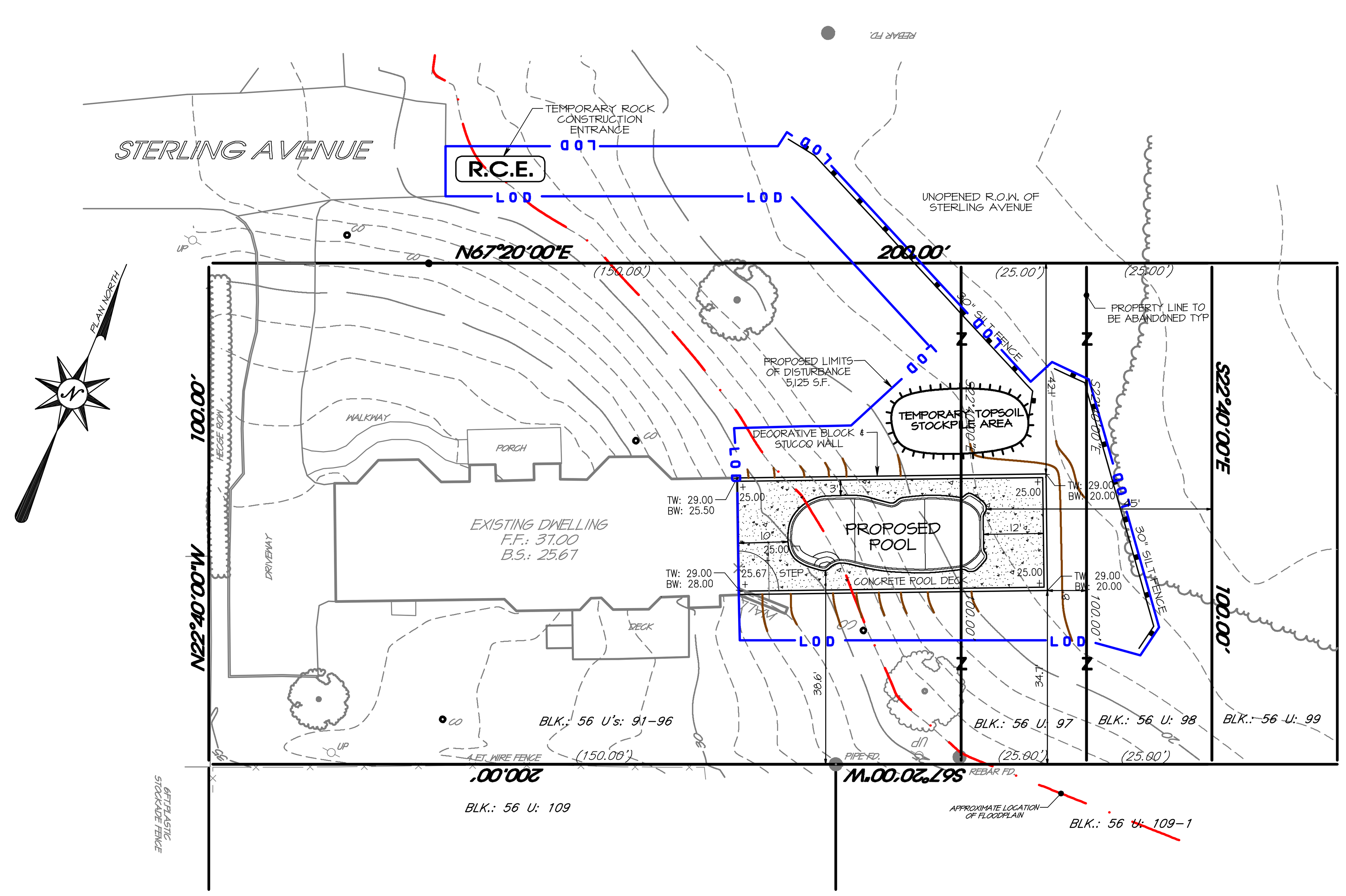

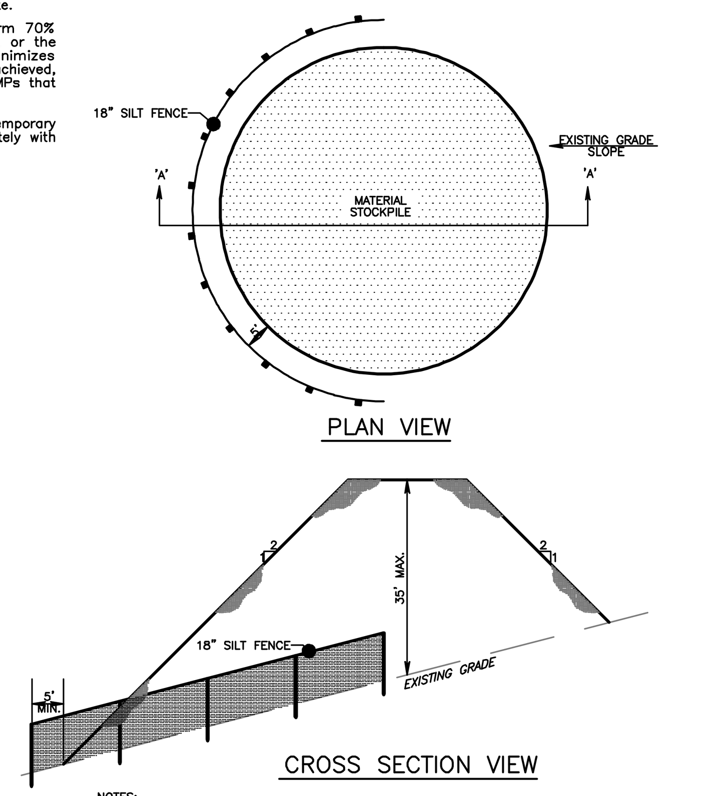

NOTES:

STOCKPILE HEIGHTS MUST NOT EXCEED 35 FEET.

SIDE SLOPES MUST BE NO GREATER THEN 2:1. 2 FEET HORIZONTALLY TO ONE FOOT VERTICALLY.

18" SILT FENCE SHALL BE INSTALLED ON THE DOWN SLOPE SIDE OF THE PROPOSED BERM AT A MINIMUM OF 5 FEET FROM THE TOE OF SLOPE.

SHOULD THE NEED ARISE WHERE ADDITIONAL STOCKPILE AREAS ARE REQUIRED THOSE AREAS MUST BE APPROVED BY THE MONTGOMERY COUNTY CONSERVATION DISTRICT.

STOCKPILE AREA MUST BE SEEDED AND MULCHED IMMEDIATELY AFTER THE PLACEMENT OF ANY STOCKPILE MATERIAL.

TEMPORARY STOCKPILE AREA DETAIL
Not To Scale

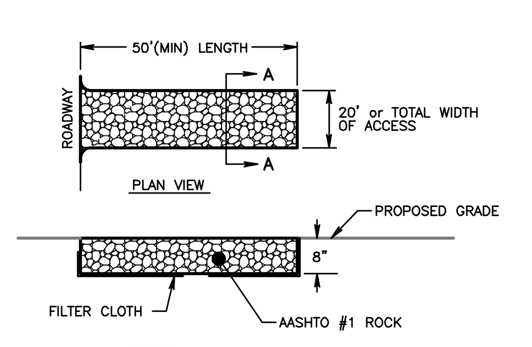

ROCK CONSTRUCTION ENTRANCE THICKNESS WILL BE CONSTANTLY MAINTAINED TO THE SPECIFIED DIMENSIONS BY ADDING ROCK. A STOCKPILE OF ROCK MATERIAL WILL BE MAINTAINED ON THE SITE FOR THIS PURPOSE. AT THE END OF EACH CONSTRUCTION DAY, ALL SEDIMENT ON PUBLIC ROADWAYS WILL BE REMOVED AND RETURNED TO THE CONSTRUCTION SITE.

ROCK CONSTRUCTION ENTRANCE
Not To Scale

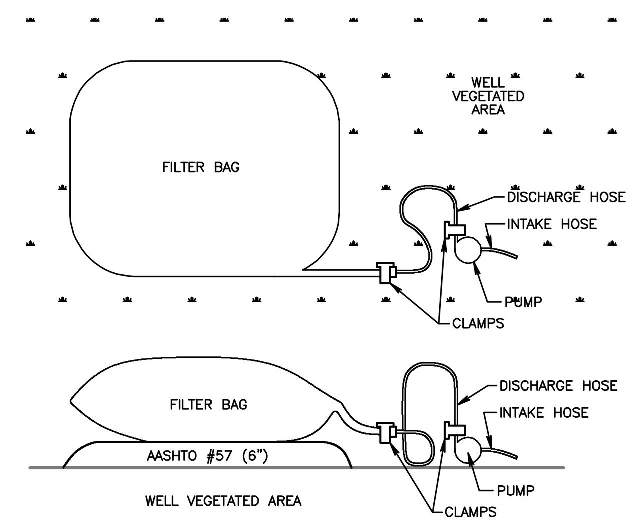

* NON-WOVEN GEOTEXTILE FILTER BAG WHICH RETAINS ALL SEDIMENT PARTICLES LARGER THAN 150 MICRONS.

PLACE FILTER BAGS ON STABLE OR WELL VEGETATED AREAS WHICH ARE FLATTER THAN 5% AND WHICH WILL NOT ERODE WHEN SUBJECTED TO BAG DISCHARGES.

CLAMP PUMP DISCHARGE HOSES SECURELY INTO FILTER BAGS.

LIMIT PUMPING RATE TO 1/2 THE MANUFACTURER'S MAXIMUM PUMPING RATE.

WHEN SEDIMENTS FILL 1/2 THE VOLUME OF A FILTER BAG, IMMEDIATELY REMOVE THAT BAG FROM SERVICE. PROPERLY DISPOSE OF SPENT BAGS WITH THEIR SEDIMENTS.

THE DISCHARGE FROM THE FILTER BAG SHOULD NOT PASS THROUGH A DISTURBED AREA OR CAUSE AN EROSION PROBLEM DOWN SLOPE.

SEDIMENT FILTER BAG FOR PUMPED WATER
Not To Scale

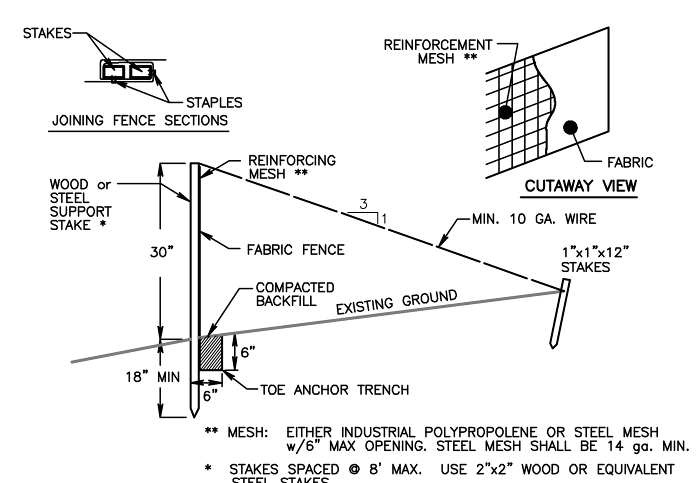

** MESH: EITHER INDUSTRIAL POLYPROPOLENE OR STEEL MESH w/6" MAX OPENING. STEEL MESH SHALL BE 14 ga. MIN.

* STAKES SPACED @ 8' MAX. USE 2"x2" WOOD OR EQUIVALENT STEEL STAKES.

NOTES:

1. FILTER FABRIC FENCE MUST BE INSTALLED AT EXISTING LEVEL GRADE. BOTH ENDS OF EACH FENCE SECTION MUST BE EXTENDED AT LEAST 8 FT. UPSLOPE AT 45 DEGREES TO THE MAIN FENCE ALIGNMENT.
2. SEDIMENT MUST BE REMOVED WHEN ACCUMULATIONS REACH 1/2 THE ABOVE GROUND HEIGHT OF THE FENCE.
3. ANY FENCE SECTION WHICH HAS BEEN UNDERMINED OR TOPPED MUST BE IMMEDIATELY REPLACED WITH A ROCK FILTER OUTLET. SEE STANDARD CONSTRUCTION DETAIL #18.
4. INSPECT PROTECTION CONTROLS ON A WEEKLY BASIS AND AFTER EACH RUNOFF EVENT.

REINFORCED FILTER FABRIC FENCE (30" High)
Not to Scale

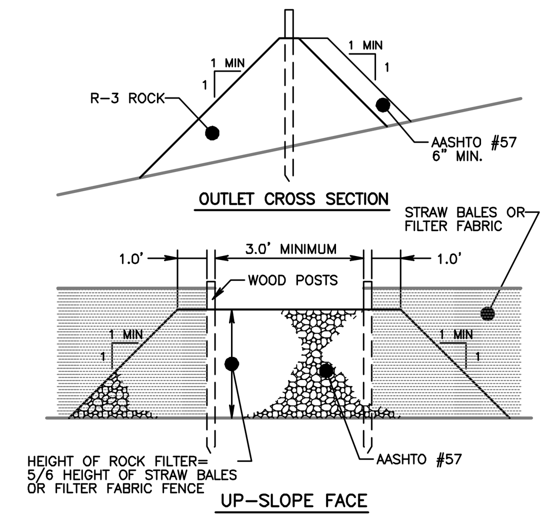

SEDIMENT MUST BE REMOVED WHEN ACCUMULATIONS REACH 1/3 THE HEIGHT OF THE OUTLET.

INSPECT PROTECTION CONTROLS ON A WEEKLY BASIS AND AFTER EACH RUNOFF EVENT.

ROCK FILTER OUTLET DETAIL
Not To Scale

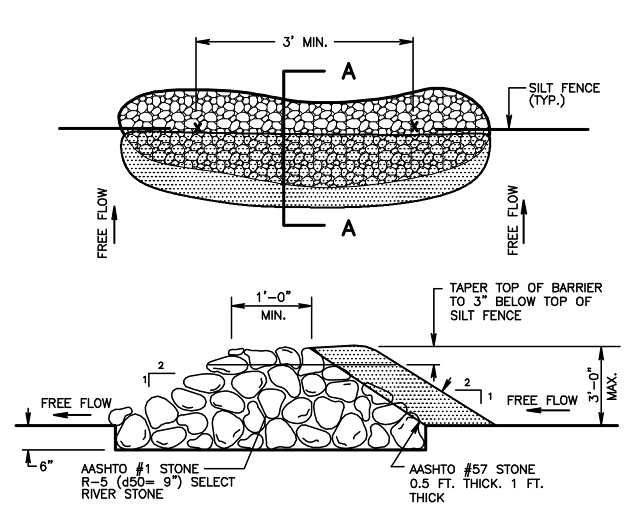

ROCK FILTER BERM DETAIL
Not To Scale

GENERAL NOTES:

1. Outbound & topographic survey information was taken from a field survey performed by Woodrow & Associates, Inc. during the month of May 2013.
2. All proposed fencing shall comply with all applicable Township ordinance standards and specifications. All gates shall be equipped with self closing and latching devices.
3. All proposed pool construction shall be in strict accordance with all applicable Township Zoning and Subdivision and Land Development Ordinance sections. The pool contractor shall acquire any and all permits prior to any construction.
4. Existing driveway to be utilitized as construction entrance during installation of pool and must be kept free and clear of any mud.
5. Tax Map Parcels 2-56-97 & 98 are to be combined in common deed with Tax Map Parcels 91 thru 96.

PENNSYLVANIA ONE CALL SYSTEM, INC. 1-800-242-1776 STOP-CALL BEFORE YOU DIG!

BEFORE YOU DIG ANYWHERE IN PENNSYLVANIA! CALL 1-800-242-1776

PA LAW REQUIRES THREE WORKING DAYS NOTICE TO UTILITIES BEFORE YOU EXCAVATE, DRILL, BLAST OR DEMOLISH

DESIGN SERIAL NUMBER: 20131300057

TOTAL PROJECT DISTURBANCE: 5,125 S.F. OR 0.1177 ACRES

IMPERVIOUS SURFACE TABULATION:

LOT AREA: 20,000 S.F. (NET LOT AREA)

EXISTING:

DWELLING:	2,112.23 S.F.
DRIVEWAY:	1,256.00 S.F.
WALKWAY/PORCH:	286.38 S.F.
CONCRETE PAD:	62.06 S.F. (T.B.R.)
SUBTOTAL:	3,716.67 S.F.

PROPOSED:

CONCRETE POOL DECK:	884.45 S.F.
POOL/SPA:	546.59 S.F.
SUBTOTAL:	1,431.04 S.F.
TOTAL:	5,085.65 S.F.

LOT AREA SUMMARY:

EXISTING IMPERVIOUS:	3,716.67 S.F. or 18.58%
PROPOSED IMPERVIOUS:	5,085.65 S.F. or 25.43%

PLAN LEGEND

- SUPPLEMENTAL CONTOUR (2' INTERVAL)
- INDEX CONTOUR (10' INTERVAL)
- EXISTING SPLIT RAIL FENCE
- EXISTING SANITARY SEWER PIPING
- EXISTING GAS MAIN
- EXISTING WATER MAIN / SERVICE
- EXISTING OVERHEAD UTILITY WIRES
- PROPOSED SILT FENCE
- PROPOSED 6' HIGH PRVIACY FENCE
- PROPOSED CONTOUR
- + 325.0 PROPOSED SPOT ELEVATION
- FLOW ARROWS
- (T.B.R.) TO BE REMOVED

REVISIONS

No.:	DATE:	DESCRIPTION:

[redacted]

Lead Engineer: T.P.W. | Lead CADD Tech: R.J.J. | Layer List: 06

PLAN SCALE: 1" = 20'
20' 10' 0' 20' 40'

THIS PLAN HAS BEEN PREPARED SPECIFICALLY FOR THE CLIENT AND PROJECT DESIGNATED HEREON. ANY MODIFICATION, REVISION, DUPLICATION OR USE WITHOUT WRITTEN CONSENT OF WOODROW & ASSOCIATES, INC. IS PROHIBITED BY LAW.
© COPYRIGHT 2013 WOODROW & ASSOCIATES, INC. - ALL RIGHTS RESERVED

Applicant: Ilva Sivchuk, 6379 Sterling Avenue, Bensalem, PA 19020

Owner: Ilva Sivchuk, 6379 Sterling Avenue, Bensalem, PA 19020

Parcel Information:
T.M.P.: 2-56-91 thru 98
Blk. 56 Units: 91-98
Deed Bk: 4868 Pg: 1761
LOT AREA: 48,699.15 Sq. Ft.

POOL PERMIT PLAN
6379 STERLING AVENUE
BENSALEM TOWNSHIP - BUCKS COUNTY COUNTY - PENNSYLVANIA

WOODROW & ASSOCIATES, INC.
MUNICIPAL / CIVIL CONSULTING ENGINEERS
1108 North Bethlehem Pike / Suite 5 - Lower Gwynedd - PA 19002
Phone: (215) 542-5648 Fax: (215) 542-5679
www.WoodrowInc.com

Job No: JPD-13-18

Plan Date: JUNE 25, 2013

SHEET No.: 1 of 1

Project No: 13-XXXX D Project Name: 6379 STERLING AVENUE Print Date: Jul 30, 2013 (15:17)